Flexural Behavior of Composite Precast Concrete Sandwich Panels With Continuous Truss Connectors

Thomas D. Bush, Jr., Ph.D.
Assistant Professor of Civil Engineering and Environmental Science
University of Oklahoma
Norman, Oklahoma

Two series of composite precast concrete sandwich panel (PCSP) systems containing various connector reinforcement and construction details were tested in flexure. Panels of one series utilized details similar to certain commercially produced panels, while the second series panels contained modified details to better evaluate interface shear transfer behavior. Results of static testing indicated that a high degree of composite stiffness and composite flexural capacity can be attained with truss girder connectors oriented longitudinally in the panels. Test results also showed that construction details can have a significant impact on the distribution of shear in elements crossing the interface. Results of fatigue testing indicated relatively minor stiffness loss over 55,000 loading cycles.

Gregory L. Stine
Civil/Structural Design Engineer
Bechtel, Inc.
Houston, Texas
(Formerly, Graduate Research Assistant, University of Oklahoma)

A variety of systems are available for use as either cladding or loadbearing exterior walls in low rise commercial buildings. A type of wall system which is finding increasing application is the use of precast concrete sandwich panels. Sandwich panels derive their name from their construction, since two layers, or wythes, of concrete are sandwiched around an insulated core.

These elements are attractive due to their superior thermal performance and structural efficiency over other types of wall systems. Depending on the thicknesses and types of concrete and insulation used, *R* values of up to about 12 are attained. In addition, due to the thermal storage properties of concrete, reductions in peak heating and cooling loads of up to 30 percent as compared to insulated studwall systems can be achieved.[1,2]

Precast concrete sandwich panel (PCSP) systems can be constructed to achieve up to 100 percent composite action, depending on the ability of embedded connectors to transfer the shear generated by longitudinal flexure. In reality, most panels are neither fully composite nor noncomposite, but lie somewhere in between. Panels can also be

either loadbearing or non-loadbearing.

Little information is readily available concerning the design and behavior of PCSP systems. Although a wide range of panel applications exists, this study focuses on the flexural behavior of composite, non-loadbearing PCSP systems. The particular wythe connector used to promote composite action was a commercially available continuous truss girder. Results of flexural and fatigue tests on full-sized panels, and tests conducted on pushout specimens, are presented in this paper.

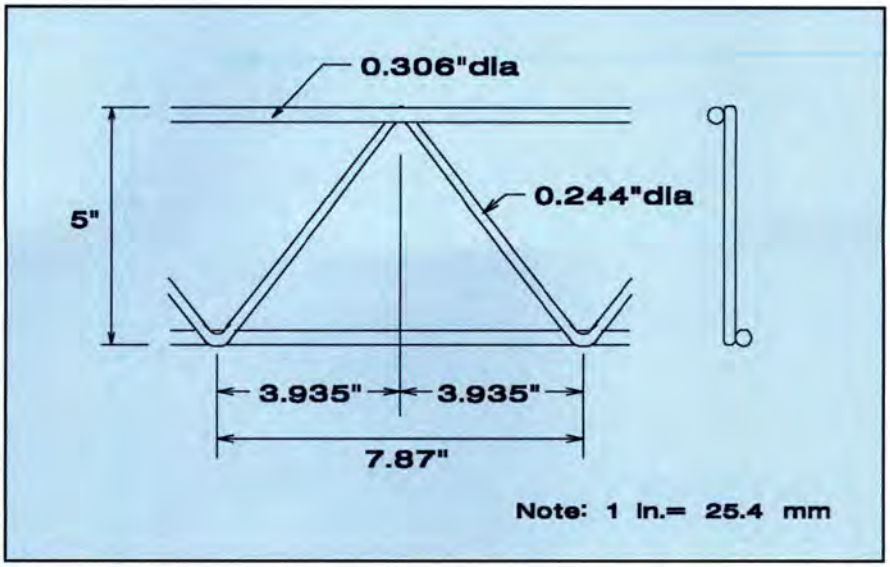

Fig. 1. Details of truss girder connector.

ISSUES RELATED TO FLEXURAL DESIGN AND BEHAVIOR

Thermal issues (such as efficiency and bowing) of PCSP systems are arguably as important as structural issues. A fundamental question that should be addressed is "how much composite action is desirable?" Structural efficiency is gained with composite action, at the expense of inducing thermal bowing. A fundamental ability to predict behavior of composite and partially composite systems is needed to meaningfully consider this tradeoff. At present, the only basis for addressing this issue is experience, and there does not appear to be a consensus.

Designers can readily calculate stresses and deflections for systems assumed to be either fully composite or fully noncomposite. Real systems fall between these limits, raising the question "how much composite action can be expected?" The degree of composite action is dependent on the amount and distribution of interface stiffness and strength. These are affected by the type and spacing of internal wythe connectors, as well as construction details.

Other important concerns include the ability to predict forces to be resisted by the wythe connectors, and potential changes in the distribution of internal shear resistance (between wythe connectors and insulation) with time. Prediction of forces resisted by the wythe connectors is necessary to ensure that connectors are not excessively distressed when the panel is subjected to design loads. The type of insulation, as well as construction details (whether bond breakers are used), may influence the distribution of internal shear resisted by the insulation and wythe connectors.[3] This distribution could change with time due to daily thermal cycles which cause bowing, and could lead to possible reduction in panel stiffness. Other design concerns, not detailed here, must be addressed depending on panel type and application. An excellent summary of design considerations, and a description of sandwich panel types and connectors, was published recently in the PCI JOURNAL.[4]

Table 1. Details of test panels.

Panel designation	Number of truss girders	Truss girder spacing, *a* (in.)	Comments
P-CF3	3	36	No welded wire fabric
P-CF4	4	24	—
P-NCF	0	—	3-ton shear can, connector pins
M-CF2	2	48	—
M-CF3	3	36	—
M-CFT	5	(see Fig. 2)	Transverse truss girders

Note: 1 in. = 25.4 mm; 1 ton = 0.907 t.

TEST PROGRAM

Two series of test panels were constructed. Production series panels were fabricated in the same manner as commercial panels produced at a precast plant, while modified series panels were constructed as idealized panels by eliminating extraneous paths of shear transfer through modification of certain construction details. Each series tested a pushout specimen and three panels of various wythe connector configuration. In addition, a specimen for cyclic loading was constructed with the modified series.

Test panel designations follow the format S-BN, where S identifies the series (Production or Modified), B identifies the anticipated behavior type (Composite Flexure or NonComposite Flexure), and N provides information on the truss girders (two, three, or four longitudinally oriented trusses, or Transversely oriented trusses).

All statically loaded panels were tested in a horizontal position with simple supports and a uniform pressure applied from beneath with an air bag. The cyclically loaded panel was simply supported and subjected to third-point loading. Since the study focused on flexural behavior, no axial load was applied to the test panels.

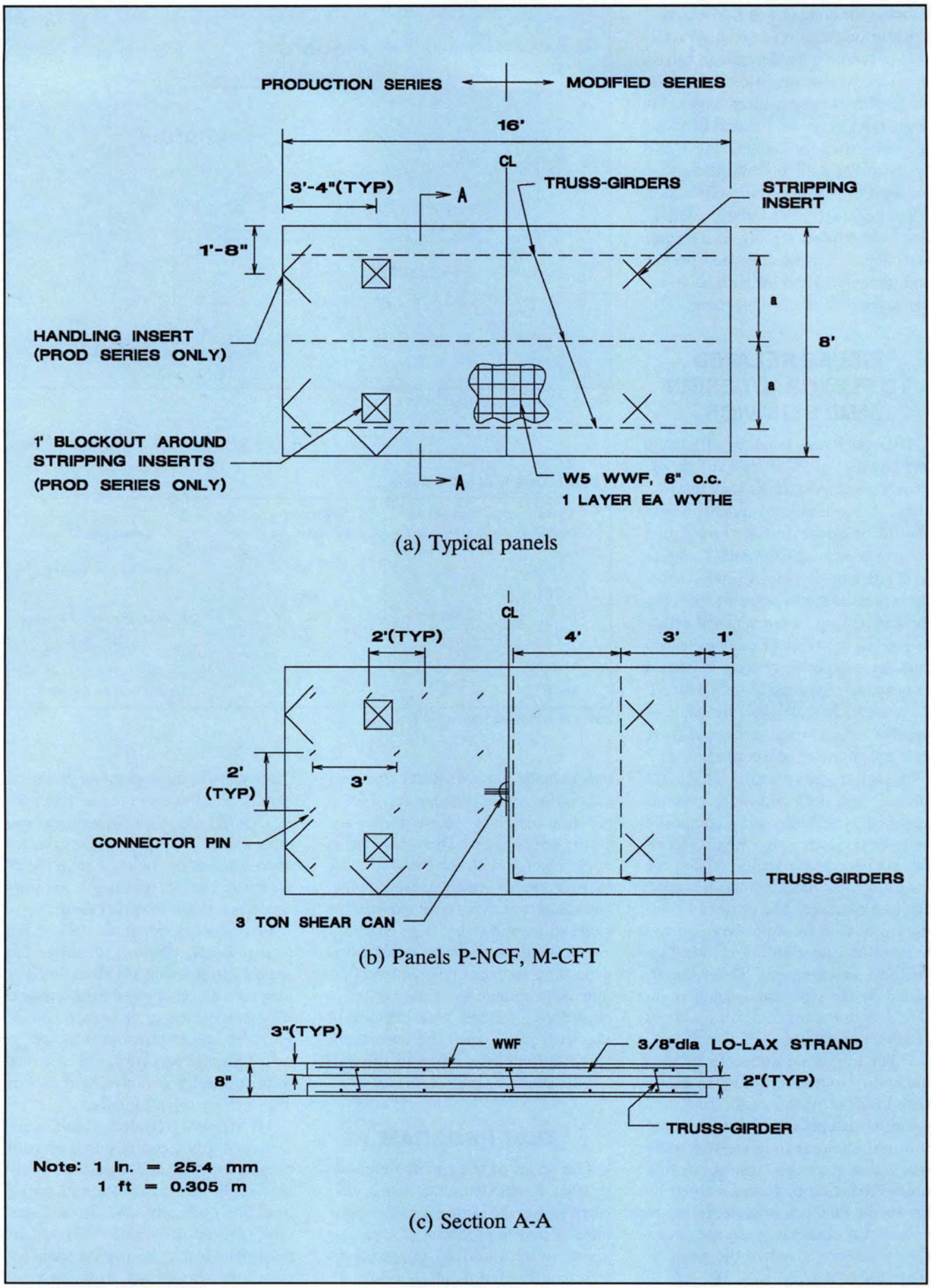

Fig. 2. Details of test panels.

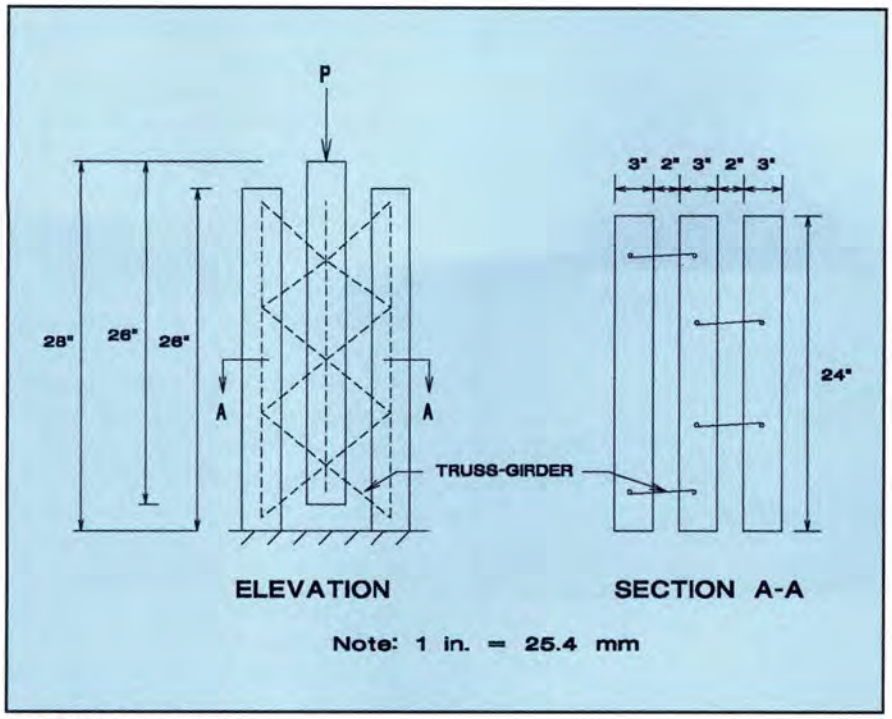

Fig. 3. Pushout specimen.

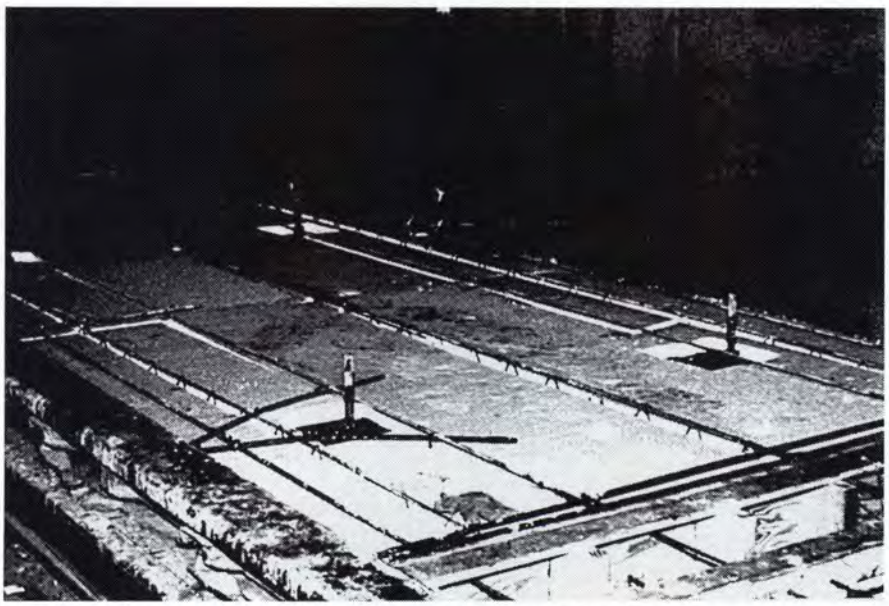

Fig. 4. Production series panel, prior to casting second wythe.

Test Specimen Details

Truss girders used in the panels were commercially available single face welded wire girders, shown in Fig. 1. Specified design yield strength was 60 ksi (410 MPa). The six statically loaded panels were nominally 8 in. x 8 x 16 ft (203 mm x 2.44 x 4.88 m), with 3 in. (76 mm) thick concrete wythes separated by 2 in. (51 mm) of expanded polystyrene insulation (3-2-3 construction). Each panel contained ten ⅜ in. (9.5 mm) diameter 270 ksi (1860 MPa) low relaxation strands (five per wythe) which produced a concentric nominal prestress of approximately 225 psi (1.55 MPa). Panel concrete compressive strengths at the time of testing were within the range of 5.5 to 6.0 ksi (38 to 41 MPa).

Details of the test panels are listed in Table 1 and illustrated in Fig. 2. Fewer truss girders were purposely used in the test panels than might be used in a commercially produced panel. The intent was to force the truss girders to fully participate in order to obtain information on their contribution toward panel stiffness and shear transfer between the wythes.

The panel subjected to fatigue loading was similar to the modified series panels, but had a width of 4 ft 9 in. (1.45 m). The panel contained two longitudinally oriented truss girders spaced 24 in. (610 mm) on center, and was 16 ft (4.88 m) long. The panel was loaded using a servo-controlled hydraulic actuator with a spreader beam to apply third-point loading.

A pushout specimen was also constructed with each series of panels, as shown in Fig. 3. These specimens were loaded at the center wythe to produce direct shear across the interfaces. Each pushout specimen contained the same total amount of truss girder reinforcement as one-half the length of a longitudinally oriented truss girder in a full-sized test panel.

Instrumentation was similar for all test panels. Panel out of plane displacements were measured using LVDTs, and loading applied by the air bag was measured using a pressure transducer. Strain gauges were placed on the concrete surfaces and embedded reinforcement at midspan. These were used to measure the strain gradient through the thickness of the panels.

Selected truss girder diagonal elements were instrumented with strain gauges to allow determination of forces in the diagonals. Strains in prestressing strands were monitored from construction to testing to allow determination of losses. All laboratory test data were collected and stored using a PC-based data acquisition system.

Production

Panels are typically cast in a flat bed. After lower wythe strands are tensioned, reinforcement and handling inserts are placed, and concrete is poured for the first wythe. Truss girders and insulation are then put into position, top strands tensioned, remaining top wythe reinforcement placed, and the upper wythe cast. For the test panels, this basic procedure was followed with minor exceptions. No bond breaker between the concrete

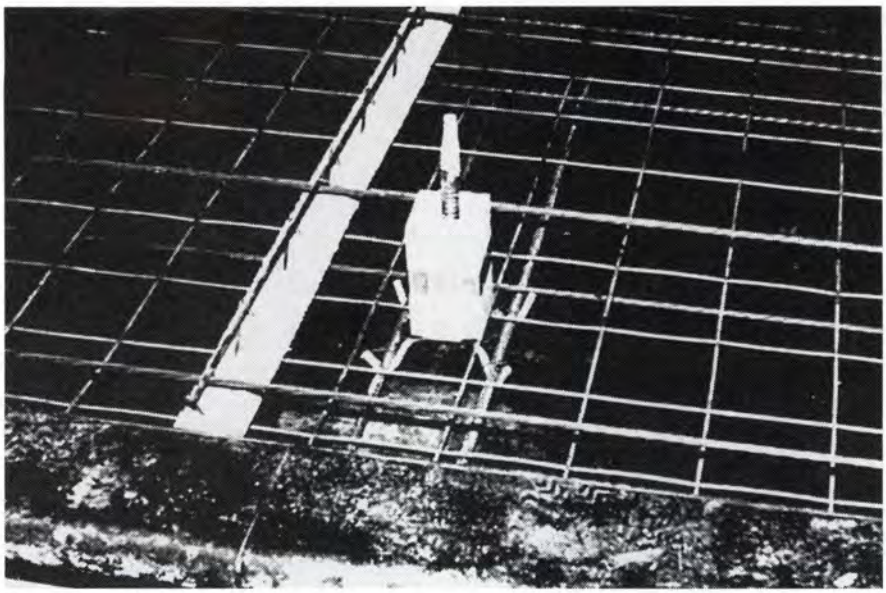

Fig. 5. Modified details.

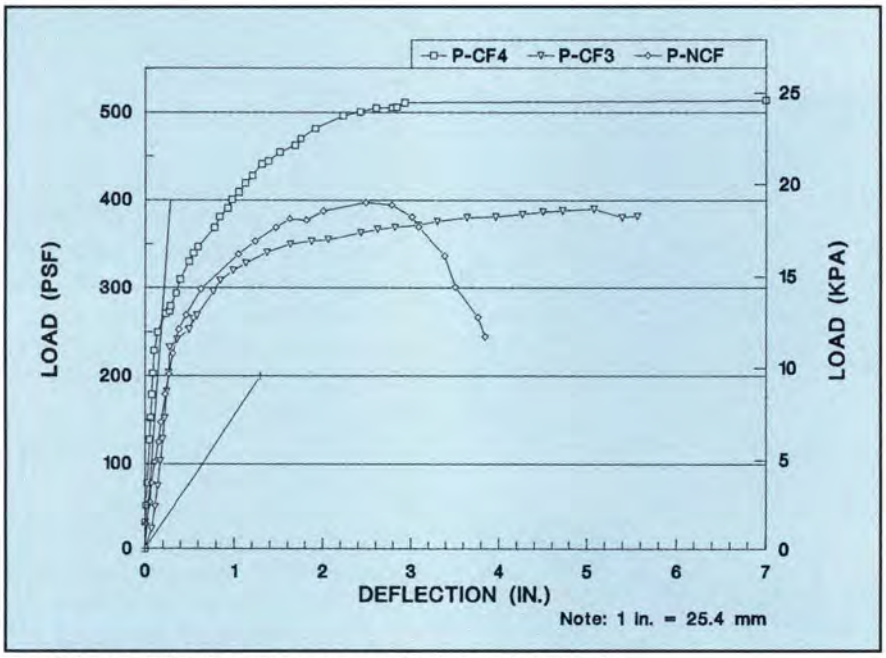

Fig. 6. Load-deflection response, production series panels.

Table 2. Ratios of test to predicted values for panel parameters.

Panel designation	Test/Predicted*		
	Flexural stiffness $EI^{\dagger}$	Cracking moment M_{cr}	Flexural capacity M_n
P-CF3	0.7	2.75	1.20
P-CF4	1.4	1.93	1.18
P-NCF	0.5	1.08	0.97
M-CF3	1.1	1.33	1.01
M-CF2	0.8	1.28	0.84
M-CFT	0.6	0.63	0.75

* Predicted values computed assuming full composite action.
† Initial uncracked stiffness.

and insulation was used in construction of the test panels.

Certain details should be recognized to aid in understanding the behavior of the production series test panels. As shown in Figs. 2 and 4, square blockouts were cut into the insulation around the four stripping inserts, and handling inserts were placed along one end and one edge of the panels. Since the web of the truss girders is open, when the insulation is shoved tightly against the trusses, small gaps remain between the sheets of insulation. Concrete is free to flow into the open web, creating a ½ to ⅝ in. (13 to 16 mm) thick concrete rib around the truss girder. All these details produce effects which contribute to shear resistance across the interface.

These details were changed for the modified series panels, as shown in Fig. 5. The end and edge handling inserts were eliminated, and styrofoam collars were placed around the stripping inserts. In addition, strips of insulation were placed around the truss girder webs and filled with spray foam insulation to prevent concrete from flowing into the webs during casting. These modified details eliminated unwanted paths of shear transfer to more adequately assess the in-situ shear transfer capabilities of the truss girders and insulation.

TEST RESULTS

Brief discussion of the behavior of the statically loaded panels, test observations, results of pushout tests, and results of fatigue loading are contained in the following sections. More detailed descriptions are provided in Refs. 5 and 6.

Behavior of Statically Loaded Panels

Production series panels were tested with three and four longitudinally oriented truss girders. One panel contained no truss girders. Load-deflection relationships for the production series panels are shown in Fig. 6 (unloading branches are omitted for clarity). Also shown in the figure are theoretical stiffnesses of fully composite and fully noncomposite

panels. Ratios of test to predicted values for stiffness, cracking moment, and nominal flexural capacity are contained in Table 2 for all test panels. Predicted values were calculated based on the assumption of fully composite behavior.

From Fig. 6 and Table 2, it can be seen that Panels P-CF3 and P-CF4 behaved much more nearly composite than noncomposite. Panel P-NCF had an initial stiffness approximately halfway between composite and noncomposite. Panel P-CF3's slightly reduced flexural capacity is primarily attributed to the absence of welded wire reinforcement in the wythes.

Panels P-CF3 and P-CF4 exhibited classical flexural cracking. Observed strain gradients were essentially continuous across the two wythes for applied loads up to approximately 300 psf (14.4 kPa), indicating a large degree of composite action. Very small forces were measured in the truss girder diagonals, suggesting that most of the interface shear was being transferred through the handling and stripping inserts and the concrete ribs which formed around the truss girders.

The influence of production series construction details on behavior was confirmed by tests on Panel P-NCF. Even though the panel contained no truss girders, measured strain gradients indicated significant composite action at midspan. As shown in Fig. 7, a large flexural crack developed just beyond the handling and stripping inserts. Noncomposite behavior was observed only in the short length of the panel beyond this crack, a region which contained no stripping or handling inserts. The applied moment at the failure location (just beyond the inserts) was approximately equal to the noncomposite flexural capacity, while the moment at midspan was nearly equal to the composite moment capacity (see Table 2).

In the modified series, panels with two and three longitudinally oriented truss girders, and one panel with transversely oriented truss girders, were tested. Load-deflection relationships for the modified series panels, shown in Fig. 8, indicated that Panels M-CF3 and M-CF2 behaved more nearly composite than noncomposite. The stiff-

(a) Panel during testing

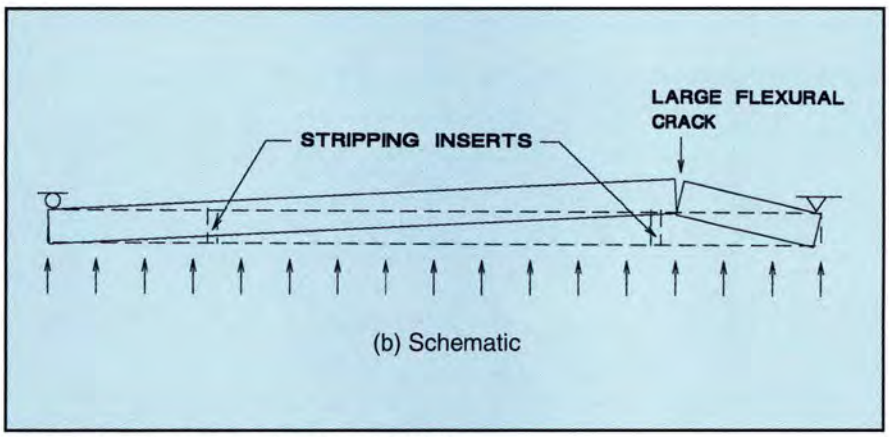

(b) Schematic

Fig. 7. Large flexural crack in Panel P-NCF.

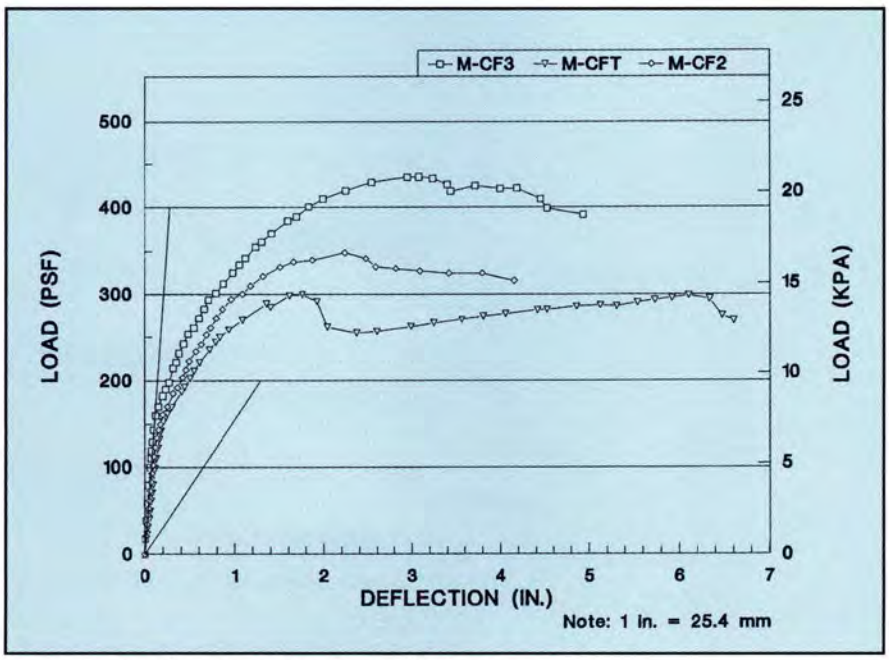

Fig. 8. Load-deflection response, modified series panels.

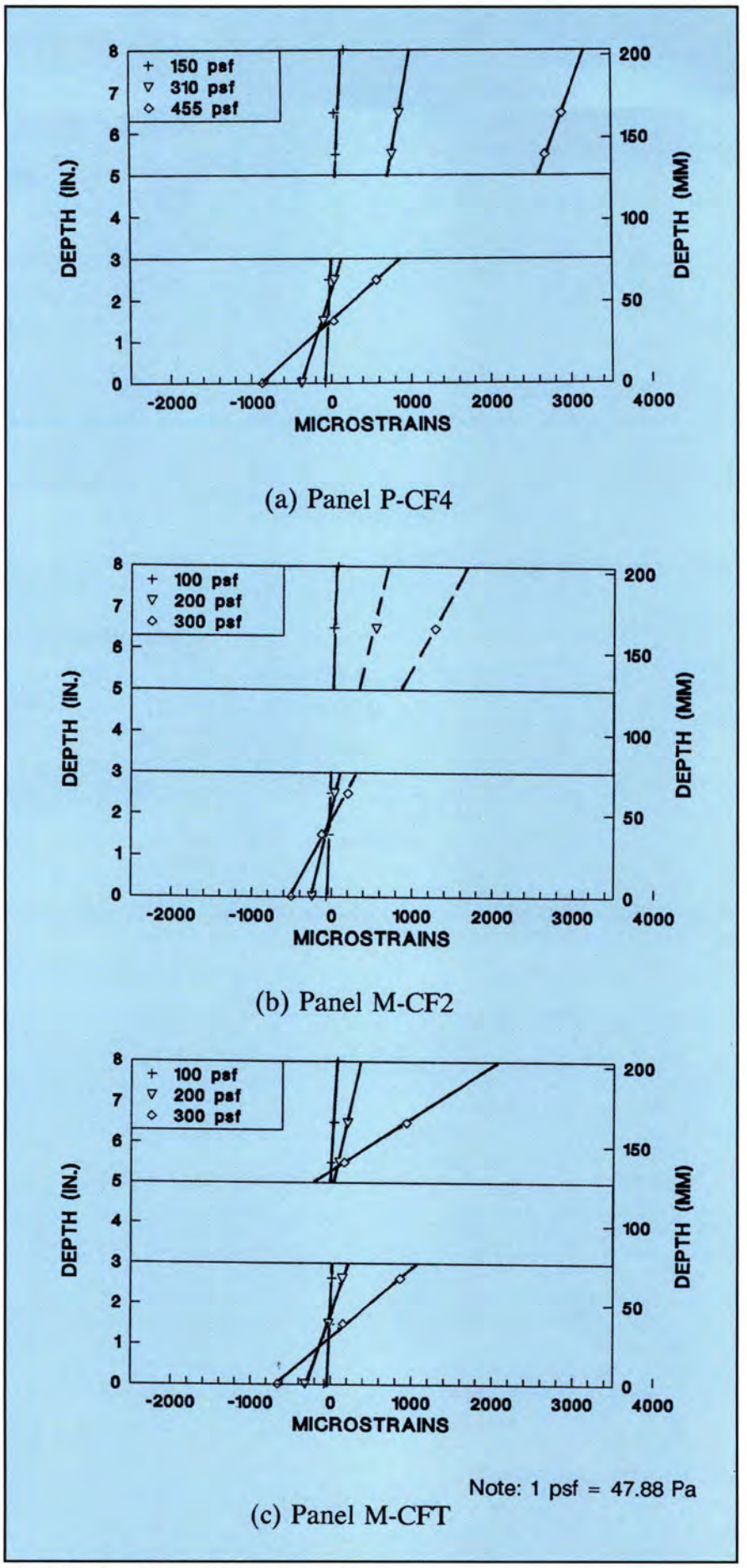

Fig. 9. Measured strain gradients at midspan.

ness of Panel M-CFT fell about halfway between composite and noncomposite. Ratios of test to predicted stiffness, cracking moment, and flexural capacity are presented in Table 2.

Panel M-CF2 exhibited classical flexural cracking in the tension wythe. Additionally, some cracking occurred at the panel ends due to the wide truss girder spacing. Forces developed in truss girder diagonals at the onset of the test, indicating immediate participation in resisting the interface shear. Yielding and buckling occurred in truss diagonals near the support at a load of 300 psf (14.4 kPa); redistribution then took place and yielding and buckling occurred for the instrumented diagonals at quarter span at a load of 325 psf (15.5 kPa). Some strand slippage and splitting cracks were noted near the supports at the conclusion of the test.

Panel M-CF3 also exhibited flexural cracking of the top wythe. Truss diagonals near the support yielded and buckled at 400 psf (19.2 kPa) applied load; however, no yielding or buckling occurred in diagonals at quarter span. Some minor strand slippage and splitting cracks were observed at the end of the test.

Panel M-CFT, which contained transversely oriented trusses, exhibited flexural cracking similar to the other panels. Additional flexural cracks developed just outside the truss girders nearest the supports (similar to the crack of Panel P-NCF). The cause for the sudden drop in capacity at a deflection of 2 in. (51 mm) as shown in Fig. 8 is unknown. Once the system stabilized, the panel was able to reattain peak capacity at a greatly increased deflection.

Strain Gradients

Strain gradients obtained at midspan confirmed global stiffness observations for the test panels. Measured strain gradients at various load stages for Panels P-CF4, M-CF2, and M-CFT are shown in Fig. 9. Some data points from certain gauges were omitted from the graphs if the data appeared questionable (due to inoperable gauges, or cracks through surface gauges). Measured strain gradients

were fairly continuous through the thickness of all panels except Panel M-CFT.

Percent Composite Moment

To determine the percent of the external moment at midspan resisted by internal composite action, the following equation was applied:[7]

$$M_{com} = [M_{ext} - (M_{tw} + M_{bw})] / M_{ext} \times 100 \quad (1)$$

where

M_{com} = percent of composite moment

M_{ext} = external moment at midspan of panel, $wl^2/8$

$M_{tw,bw}$ = internal noncomposite moment on top or bottom wythe = $SE_c\varepsilon$

S = section modulus of a single uncracked wythe

E_c = modulus of elasticity of concrete

ε = average strain difference at outer faces of wythe, as determined from test data

As shown in Fig. 10, in the elastic range (loads prior to cracking) all panels exhibited a high degree of composite action at midspan, with the exception of Panel M-CFT.

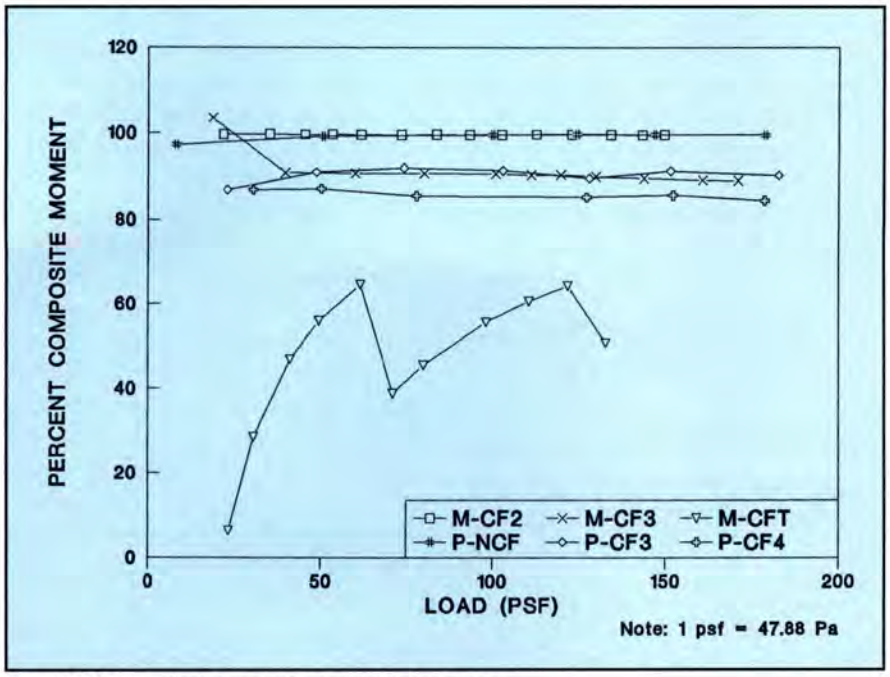

Fig. 10. Calculated percent composite moment.

Table 3. Loading for panel tested in fatigue.

Mean interface shear stress* (psi)	Interface shear stress range * (psi)	Number of cycles
3.1	4.7	19,750
3.9	4.7	9,270
5.5	9.4	7,020
6.3	9.4	17,690
8.6	15.7	13,970

* Nominal shear stress values computed based on full composite action at interface of concrete and insulation.
Note: 1 psi = 6.89 kPa.

Pushout Tests

One pushout specimen was cast using the construction procedures of each series. Both specimens contained the same amount of truss girder reinforcement. The specimens contained no handling hardware. Concrete was prevented from filling the webs of the truss girders of the modified series specimen as in the case of the full-sized panels.

The concrete ribs which formed around the trusses of the production series specimen significantly affected both the shear stiffness and strength of the interface. The production series specimen resisted 70 percent more load and was 350 percent stiffer in shear than the modified series specimen.

Fatigue Testing

A fatigue test was conducted to evaluate the potential for deterioration of composite stiffness with repeated cyclic loading. The third-point loading created zones of essentially constant shear in the ends of the panel. Magnitude of loading was determined to imitate effects similar to daily thermal gradients through the thickness of the panel.

An estimate for the initial loading was determined by calculating the shear across the interface at a temperature differential of 50°F (10°C) between the inner and outer wythes. The shear was determined using a frame model of the panel with one wythe expanded by the temperature differential between the wythes. This temperature differential would be representative of a southern climate exposure; later loading applied to the panel was representative of a more extreme temperature differential.

Testing was carried out by applying several thousand cycles of loading at a constant load range and average load. When no significant stiffness loss occurred after several thousand cycles, a more demanding loading history was used. Changes in stiffness were determined by loading the panel statically at the beginning and end of each set of fatigue cycles. A breakdown of the testing cycles is given in Table 3.

The observed stiffness reduction behavior is illustrated in Fig. 11. Changes in stages of applied loading are denoted by vertical lines in the figure. The discontinuity in the right hand portion of the graph is due to the change in panel stiffness resulting from cracking. Test results indicated an overall reduction of about 15 percent from the initial stiffness of the test panel after 55,000 cycles. After cracking, the rate of stiffness loss

slowed to about 4 percent over a period of 12,500 cycles. The reduction in stiffness prior to cracking was probably caused by deterioration of the bond between the concrete and insulation, since stiffness reduction was accompanied by an increase in forces in the truss diagonals.

DISCUSSION OF TEST RESULTS

The observations that follow apply to the range of variables and conditions of testing examined in this study. Only flexural behavior was examined and a limited number of tests were conducted.

Production Series Panels

Construction details had a large influence on the behavior of the production series panels tested. The "alternate" shear paths provided by the stripping/handling details and concrete ribs were actually the primary paths of shear resistance. The truss girders added to the net steel in the tension wythe, and provided a source of composite resistance in the short region of the panels where there were no embedded inserts or solid concrete blocks connecting the wythes.

Although not examined in this study, the construction details would reduce the thermal efficiency of the panels. The solid concrete blocks around the stripping inserts, concrete ribs around the truss girders, and steel handling and stripping inserts created additional thermal bridges to those caused by the truss girders themselves.

Modified Series Panels

The modified series test panels with longitudinal truss girders attained high degrees of composite behavior (80 percent or more) with less interface reinforcement than might typically be used in production. The truss girders were effective in transmitting shear and promoting composite flexural deformations. The tests also provided evidence that the insulation strongly promoted composite behavior. For the composite flexural capacity to be reached at midspan, a minimum total interface shear capacity must exist over the distance from support to midspan. This minimum required interface capacity is equal to the net resultant force in the compression (or tension) wythe at midspan.

The capacity of a half-span length of truss girder can readily be calculated assuming plastic behavior of the truss. This calculated capacity agrees well with the experimentally obtained capacity from the pushout test. For Panel M-CF3, the truss girders were capable of providing only about 50 percent of the required shear resistance. In the absence of other extraneous shear paths, the insulation likely provided much of the other half of the required interface resistance.

This estimate of insulation strength contribution may be conservative, since no yielding or buckling was detected for the truss girders at quarter span in Panel M-CF3. A similar analysis performed using the test results from Panel M-CF2 suggested that the insulation may have provided as much as two-thirds of the total interface shear resistance. These contributions by insulation may appear high, since insulation is generally thought to be weak and flexible. However, the area of the interface is quite large; nominal shear stresses associated with the contributions listed above are in the range of 15 to 20 psi (103 to 138 kPa).

The insulation's contribution to shear resistance will be highly dependent on the type of insulation and on construction practices. The expanded polystyrene ("beadboard") used in this study contained no facing material, and no bond breakers were used. Excellent bond between the concrete and insulation was maintained through ultimate capacity. However, other insulation materials may not exhibit the same bond or strength characteristics.

Fatigue testing showed that, for the insulation used, only minor stiffness loss occurred over an extreme range of loading and number of cycles, suggesting some deterioration of bond with the insulation. However, the practice of assuming composite behavior for handling and noncomposite behavior for service, which is used for some panels, would be very conservative for the panels tested.

Analytical Predictions

Preliminary analytical studies were conducted; however, test results of only two panels (M-CF2 and M-CF3) could be utilized. The finite element method and closed form solutions are currently being examined with the goal of predicting behavior and developing rational design guidelines. Still, comparing predictions of standard approaches with test results may prove useful to the designer.

In the range prior to cracking, assuming full composite behavior and using a strengths of materials approach, predicted maximum wythe stresses were within ±15 percent of those calculated from strain measurements. This reasonable correlation is consistent with the high degree of composite behavior observed in the two tests. However, a simple approach to prediction of forces in the truss girder diagonals was much less successful. Attempts to compute truss forces from the tributary elastic shear flow over the length of a truss girder diagonal resulted in overprediction by a factor of 5 to 20.

The predicted composite flexural capacity was computed using a strain compatibility analysis with measured material properties and prestress losses. This prediction assumed that sufficient shear capacity was available across the interface. As seen in Table 2, this estimate was very good for Panel M-CF3, but high for Panel M-CF2. However, it may not be clear beforehand that sufficient interface shear capacity exists. Unless established by test, it may be prudent to ignore the shear capacity contribution of the insulation at ultimate. Using this assumption, the predicted flexural capacities of both panels would have been limited by the shear transfer capacities of the truss girders.

The flexural capacities and cracking moments for the test panels were well above those required under normal loading conditions, suggesting section properties could be reduced. Wythe thicknesses for the test panels were selected primarily based on cover requirements for welded wire reinforcement and the desire to maintain concentric prestressing, in both the individual wythes and the total section.

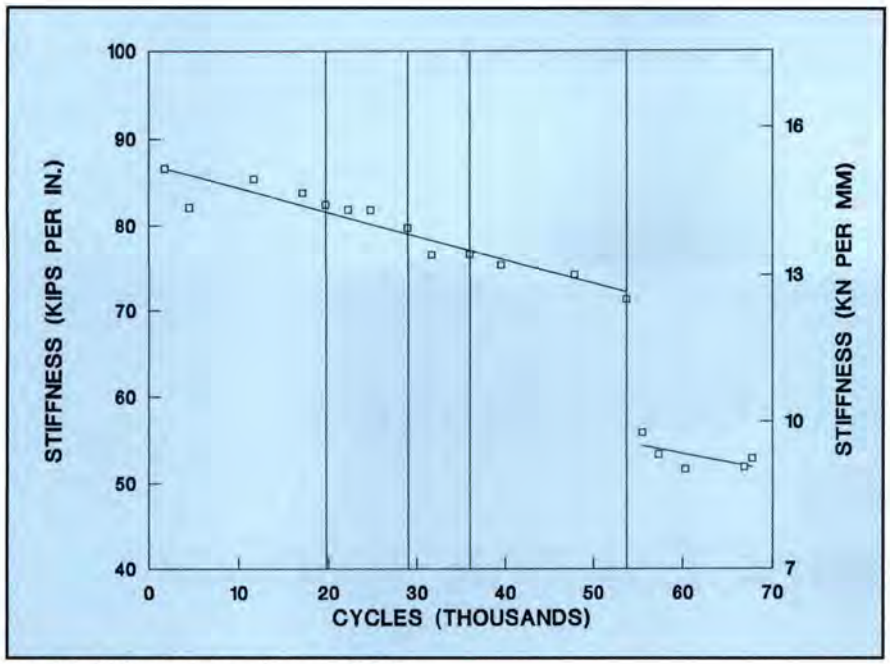

Fig. 11. Stiffness loss with cyclic loading.

CONCLUSIONS

Based on the test results of this research program, the following conclusions may be drawn:

1. Truss girders oriented in the longitudinal direction can provide ample shear transfer to achieve a high degree of composite flexural behavior.

2. Due to construction details used in the production series panels, much of the interface shear was transferred through stripping and handling inserts, and concrete ribs which formed around the truss girders. While these details increase interface shear transfer capability, they are also detrimental to panel thermal performance. The designer should carefully consider the potential effects of such details, particularly if noncomposite behavior is desired.

3. For the modified series panels tested, a large percentage of the interface shear was transferred through the insulation. This was possible since sufficient bond between the insulation and concrete wythes was maintained through ultimate.

4. Test results indicated that due to the internal redundancy of the shear transfer mechanism, redistribution of shear can occur allowing the panel to continue resisting load. Even with truss diagonals buckled in compression and yielded in tension, Panel M-CF3 was able to reach its predicted composite nominal flexural capacity.

5. Fatigue testing provided insight into the long term ability of the truss girders to provide for composite behavior. Tests results indicated approximately 15 percent deterioration in stiffness after 55,000 load cycles, with a corresponding increase in measured truss forces. The stiffness loss was likely due to degradation in the bond between the concrete and the insulation.

6. All panels tested proved to be very ductile, experiencing large deformations prior to failure. Lateral capacities were well in excess of typical design loads.

RECOMMENDATIONS FOR FUTURE RESEARCH

Additional research is needed to develop simple, rational guidelines for predicting the behavior of PCSP systems which use generic interface connectors. In the area of flexure, more test results are needed to develop and/or verify analytical methods for predicting panel stiffness and forces developed in wythe connectors. The larger and more comprehensive issues of structural and thermal behavior of loadbearing PCSP systems, particularly those relying on full or partial composite action, must also be addressed.

ACKNOWLEDGMENT

This research was supported by the Precast/Prestressed Concrete Institute through a Daniel P. Jenny Research Fellowship, and by the University of Oklahoma Research Council. The support of Thomas Concrete Products, Oklahoma City, and Meadow Steel Products, Inc., through panel fabrication and donation of materials is gratefully acknowledged. Technical support was also provided by Herman C. Himes of H. C. H. Precast Design Services, Inc., whose assistance is greatly appreciated. The support of the students, technician, and staff of Fears Structural Engineering Laboratory is also gratefully acknowledged. The opinions, findings, and conclusions contained herein are those of the authors, and do not necessarily reflect the views of the sponsors.

REFERENCES

1. *PCI Manual for Structural Design of Architectural Precast Concrete,* MNL-121-77, Precast/Prestressed Concrete Institute, Chicago, IL, 1977, Chapters 6 and 13.
2. *PCI Design Handbook – Precast and Prestressed Concrete,* Fourth Edition, Precast/Prestressed Concrete Institute, Chicago, IL, 1992, Chapter 9.
3. Pfeifer, D., and Hanson, J., "Precast Concrete Wall Panels: Flexural Stiffness of Sandwich Panels," PCA Bulletin D99, Portland Cement Association, Skokie, IL, 1965, pp. 67-86.
4. Einea, A., Salmon, D. C., Fogarasi, G. J., Culp, T. D., and Tadros, M. K., "State-of-the-Art of Precast Concrete Sandwich Panels," PCI JOURNAL, V. 36, No. 6, November-December 1991, pp. 78-98.
5. Stine, G. L., and Bush, T. D., "Flexural Behavior of Composite Prestressed Sandwich Panels," Research Report No. FSEL/PCI 91-01, University of Oklahoma, Norman, OK, September 1991, 122 pp.
6. Stine, G. L., "Flexural Behavior of Composite Prestressed Sandwich Panels," M.S. Thesis, University of Oklahoma, Norman, OK, May 1992, 133 pp.
7. Wade, G., Porter, M., and Jacobs, D., "Glass-Fiber Composite Connectors for Insulated Concrete Sandwich Walls," Iowa State University Report ISU-ERI-Ames-88202, Ames, IA, March 1988, 205 pp.