American River Bridge At Hazel Avenue (Widen)

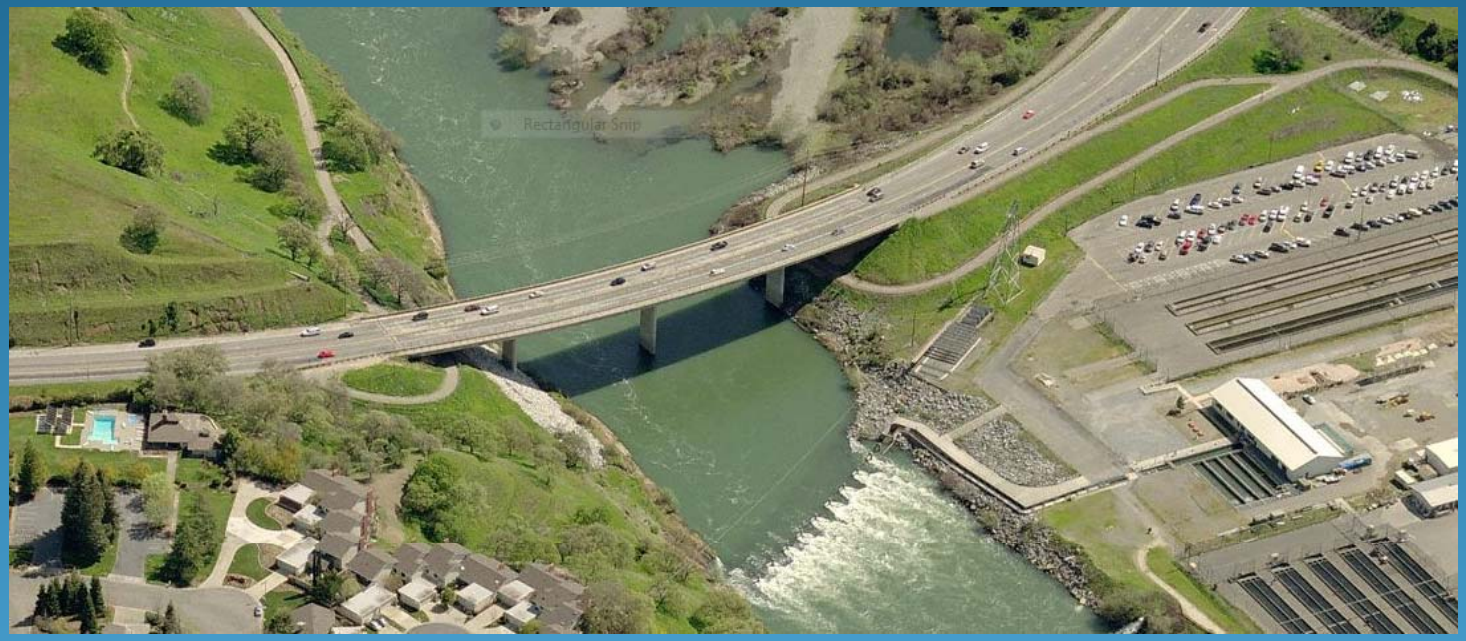

November 3, 2010

Brent R. Koch, P.E.
Con-Fab California Corporation

HAZEL AVENUE IMPROVEMENT PROJECT

PHASE 1

US 50 to Curragh Downs Drive

Project Length 0.9 Miles

Owner	**County of Sacramento**
Engineering Design	**Parsons Brinkerhoff – Sacramento, CA**
General Contractor	**Flatiron West - Benicia, CA**
Precast Subcontractor	**Con-Fab California Corp - Lathrop, CA**

Project Description

Phase 1 of the Hazel Avenue Projects includes improvements from U.S. Highway 50 to Curragh Downs Drive. Roadway system benefits include:

- Improved roadway safety.
- Increased traffic capacity to ease congestion and delays.
- Improved bicycle and pedestrian facilities.
- Meet Americans with Disability Act requirements.
- Beautification of the project area.

Roadway improvements include:

- Widening Hazel Avenue from four to six lanes over the American River Bridge from U.S. 50 to Curragh Downs Drive.
- Construction of new bicycle and pedestrian facilities including bike lanes and a barrier separating bicycle/pedestrian/equestrian modes from vehicle traffic on the bridge over the American River.
- Improved connections to Folsom Lake bike trail.
- Architectural treatments on the bridge structure and decorative street lighting.
- Traffic signal modifications at Curragh Downs Drive, Gold Country Boulevard and Tributary Point.

Contract Details:

- $20M contract awarded to Flatiron West in March 2009
- (16) PCPS Bulb Tee Girders Furished and Installed - $652K
- Credit For Modifications to Architectural Treatment - $150K
- Groundbreaking – April 2009
- Trestle Installation - June 2009
- Girder Fabrication - October 2009
- Girder Erection - June 2010
- Estimated Projected Completion – January 2011

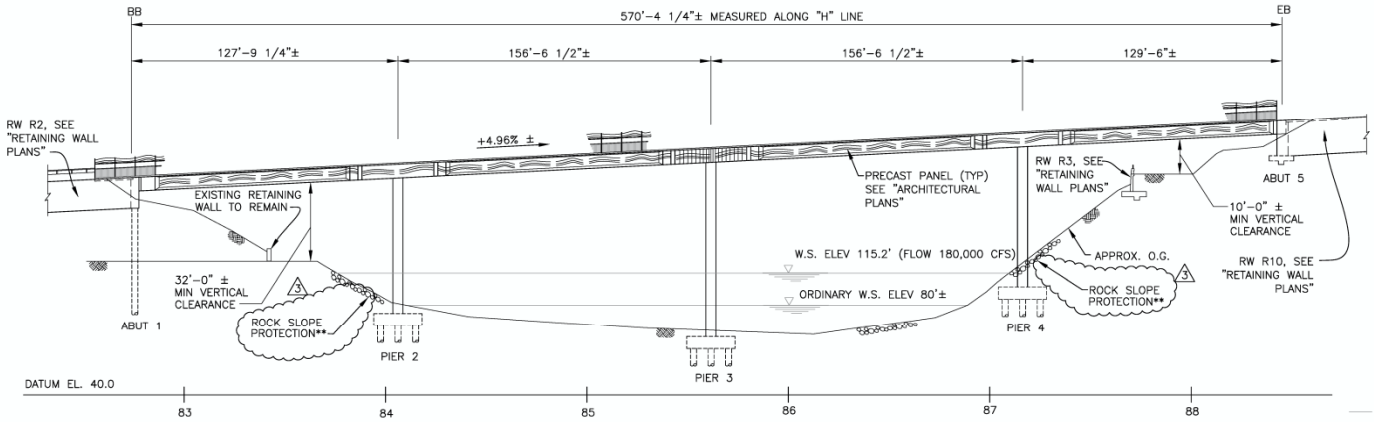

MIRRORED ELEVATION

SCALE: 1" = 30'

NOTES:

1. PAINT BRIDGE 24C-100
2. PAINT "AMERICAN RIVER BRIDGE AT HAZEL AVENUE"
3. SALVAGE EXISTING PLAQUE
4. STRUCTURE APPROACH SLAB TYPE N(30D)
5. STRUCTURE APPROACH SLAB TYPE R(30D)
6. STRUCTURE APPROACH SLAB TYPE N(30S)
7. STRUCTURE APPROACH SLAB TYPE R(30S)
8. RE-ATTACH SALVAGED PLAQUE
9. NEW 2010 DEDICATION PLAQUE PROVIDED BY COUNTY
10. REPLACE EXISTING DECK EXPANSION ASSEMBLY
11. FOR GENERAL NOTES, INDEX TO PLANS, AND STANDARD PLAN LIST, SEE 'GENERAL NOTES AND INDEX TO PLANS' SHEET

LEGEND:

- INDICATES EXISTING DRAIN INLETS
- BRIDGE LUMINAIRE
- INDICATES EXISTING STRUCTURE
- INDICATES DIRECTION OF TRAFFIC
- MINIMUM VERTICAL CLEARANCE
- EXISTING MANHOLE
- EXISTING MANHOLE TO BE WELDED ALL AROUND
- ACCESS DOOR

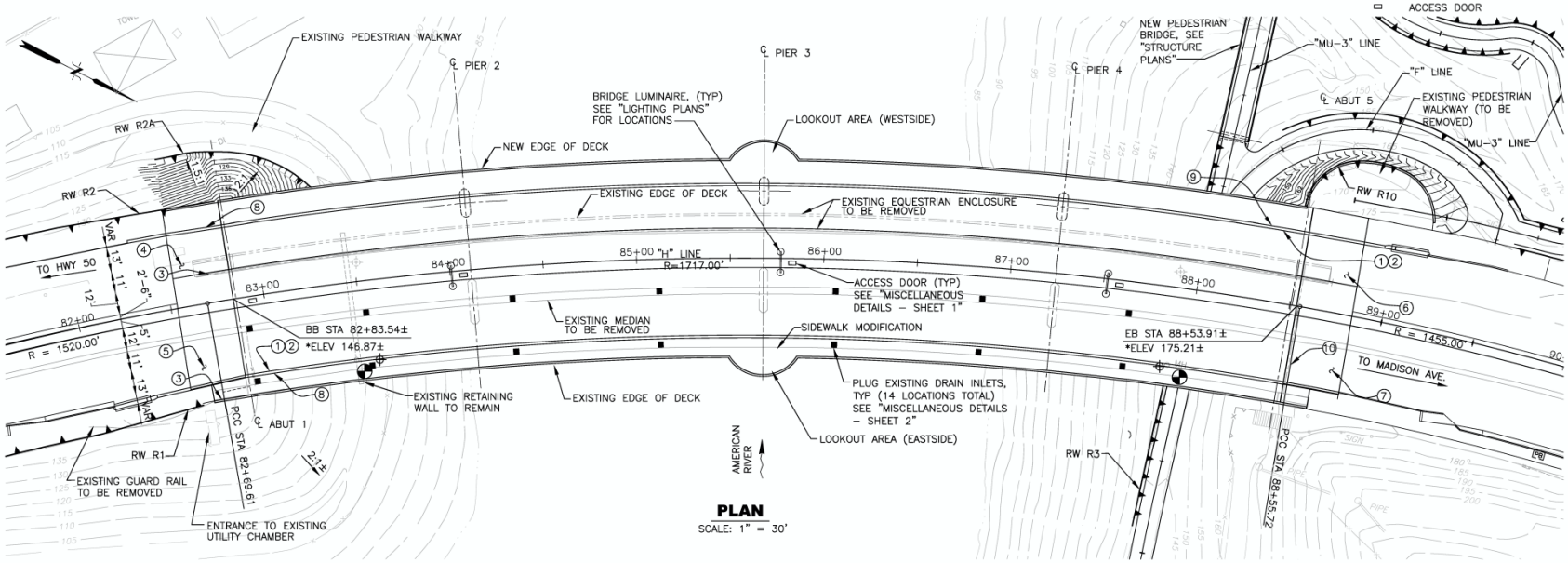

PLAN

SCALE: 1" = 30'

NOTE:
CONTRACTOR SHALL VERIFY ALL CONTROLLING FIELD DIMENSIONS BEFORE ORDERING OR FABRICATING ANY MATERIAL

3 ADDENDUM #3: ADDED NOTE REGARDING ROCK SLOPE PROTECTION 2/13/09 BY C. RAMIREZ

* PROFILE ELEVATION CORRESPONDS TO TOP OF 2" ARHM-GG.

** REMOVE AND REPLACE EXISTING ROCK SLOPE PROTECTION AFTER FOUNDATION CONSTRUCTION 3

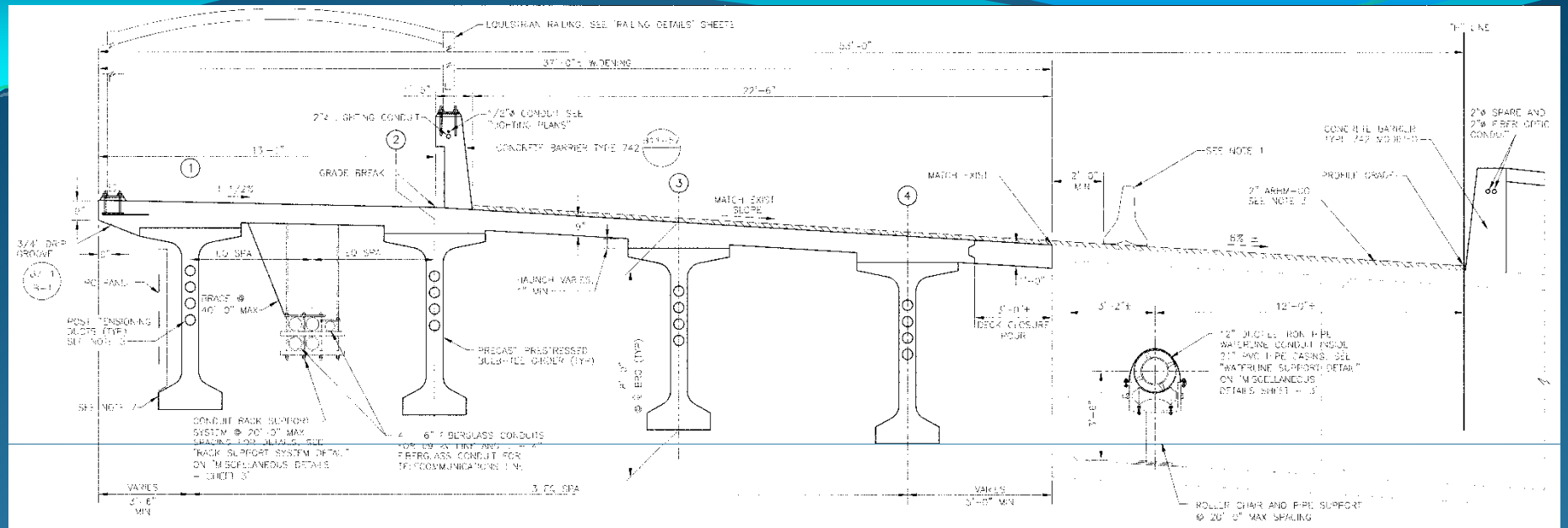

TYPICAL SECTION - PRECAST PRESTRESSED BULB-TEE GIRDER

SCALE: 1/2" = 1'-0"

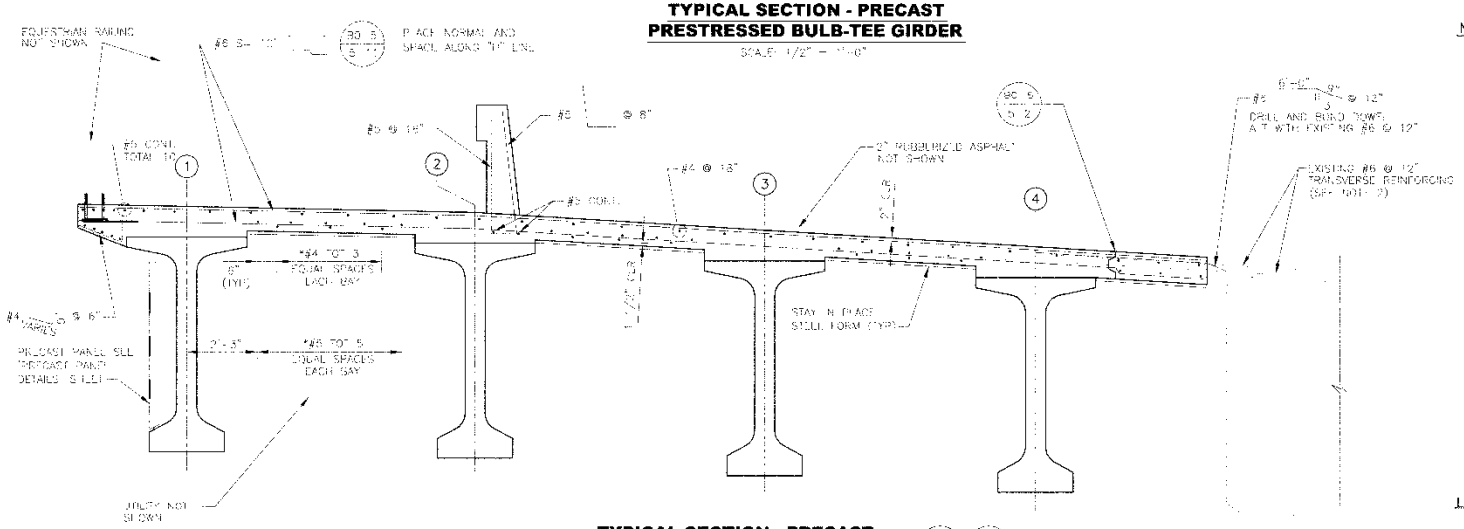

TYPICAL SECTION - PRECAST PRESTRESSED BULB-TEE GIRDER

SCALE: 1/2" = 1'-0"

NOTES:

1. TEMPORARY RAILING TYPE "K", SEE "STAGE CONSTRUCTION" PLANS AND "TEMPORARY RAILING (TYPE K) ATTACHMENT DETAIL" ON "GENERAL NOTES AND INDEX TO PLANS".
2. EXISTING TRANSVERSE REINFORCEMENT IN OVERHANG TO REMAIN AND TO BE BENT TO MATCH NEW DECK SLOPE.
3. LIMITS OF 2" ARHM-GG TO EXTEND TO END OF APPROACH SLAB.
4. CONTRACTOR SHALL BRACE ALL GIRDERS DURING GIRDER ERECTION AND BRIDGE CONSTRUCTION UNTIL ALL DIAPHRAGMS AND INTERMEDIATE DIAPHRAGMS HAVE BEEN BUILT.
5. A FOUR DUCT POST-TENSIONING CONFIGURATION IS ASSUMED. THE CONTRACTOR SHALL SUBMIT POST TENSIONING WORKING DRAWINGS, INCLUDING DUCT CONFIGURATION, NUMBER OF DUCTS, GROUTING VENT HOLES, AND ANCHORAGE DETAILS WHICH CORRESPOND TO THE POST TENSIONING FORCE (Pjack) AND PATH SPECIFIED, FOR REVIEW AND APPROVAL BY THE ENGINEER.
6. STAY IN PLACE FORMS TO BE REVIEWED/APPROVED BY ENGINEER.
7. FACE OF OVERHANG, UNDERSIDE OF OVERHANG, AND EXPOSED AREA OF GIRDER (*) TO BE PAINTED TNEMEC "BAMBOO" COLOR.

LEGEND:

- INDICATES EXISTING STRUCTURE
- INDICATES DISTRIBUTION REINFORCEMENT
- 2" ARHM-GG

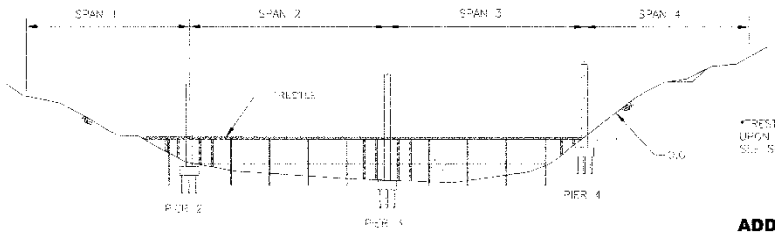

STAGE 1

A) CONSTRUCT TRESTLE AND PIER FALSEWORK SUPPORTS ACROSS RIVER (SEE NOTE 3)
B) DRILL CAST PILES, CONSTRUCT PILE CAPS, AND CONSTRUCT PIERS AT PIERS 2, 3, AND 4

*TRESTLE SHALL BE REMOVED UPON COMPLETION OF WORK. SEE SPECIAL PROVISIONS

ADDITIONAL ITEMS OF WORK

A) ERECT PRE-FABRICATED EAST SIDE LOCKOUT
B) CAST LOCKOUT DECK
C) CONSTRUCT BARRIER AND SIDEWALK MODIFICATION EAST SIDE
D) CONSTRUCT PEDESTRIAN RAILING EAST SIDE

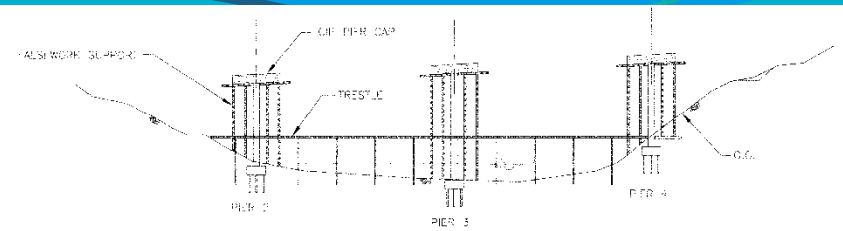

STAGE 2

A) ERECT FALSEWORK
B) CONSTRUCT CIP PIER CAP AT PIERS 2, 3, AND 4 INCLUDING WEST LOCKOUT AT PIER 3.

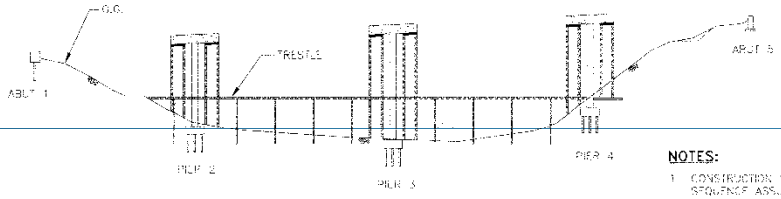

STAGE 3

A) CONSTRUCT ABUTMENTS 1 AND 5 UP TO SEAT LEVEL
B) PLACE PERMANENT BEARINGS AT ABUTMENT 5 SEAT

NOTES:

1. CONSTRUCTION SEQUENCE SHOWN CORRESPONDS TO THE SEQUENCE ASSUMED DURING DESIGN AND ANALYSIS. THE CONTRACTOR MAY EMPLOY AN ALTERNATE CONSTRUCTION SEQUENCE TO IMPROVE CONSTRUCTION, ACCESS, AND METHOD, SUBJECT TO THE REVIEW AND APPROVAL OF THE ENGINEER.
2. TRESTLE AND PIER FALSEWORK SUPPORTS SHOWN ARE FOR GRAPHICAL DESCRIPTIVE PURPOSES ONLY.
3. FOR TRESTLE DESIGN REQUIREMENTS SEE SPECIAL PROVISIONS

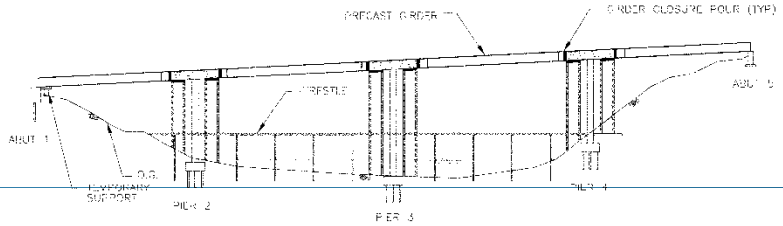

STAGE 4

A) ERECT TEMPORARY SUPPORT AT ABUTMENT 1
B) ERECT PRE-CAST GIRDERS (CONTRACTOR SHALL BRACE ALL GIRDERS DURING ERECTION AND BRIDGE CONSTRUCTION UNTIL ALL DIAPHRAGMS AND INTERMEDIATE DIAPHRAGMS HAVE BEEN BUILT)
C) CONSTRUCT CONCRETE INTERMEDIATE DIAPHRAGMS (EXCEPT PORTION BETWEEN EXISTING BRIDGE AND GIRDER (6)) AND FULL DIAPHRAGM AT ABUT 5 (EXCEPT PORTION BETWEEN EXISTING BRIDGE AND GIRDER (6))
D) CONSTRUCT GIRDER CLOSURE POUR
E) AFTER CONCRETE IN GIRDER CLOSURE POUR REACHES SPECIFIED STRENGTH, PERFORM STAGE 1 POST-TENSIONING

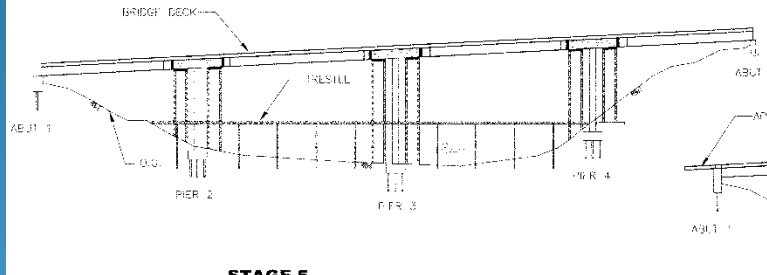

STAGE 5

A) FORM AND CONSTRUCT BRIDGE DECK, INSTALL RACK SUPPORT SYSTEM FOR 69 KV LINE
B) AFTER BRIDGE DECK CONCRETE REACHES SPECIFIED STRENGTH, PERFORM STAGE 2 POST-TENSIONING

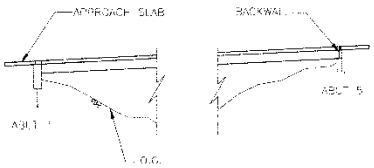

STAGE 6

A) CONSTRUCT REMAINING PORTION OF ABUTMENT 1, EXCEPT ABUTMENT 1 CLOSURE POUR, ALLOW CONCRETE TO REACH SPECIFIED STRENGTH, AND THEN REMOVE TEMPORARY ABUTMENT SUPPORTS
B) CONSTRUCT BACKWALL AT ABUTMENT 5
C) INSTALL 12" DUCTILE IRON PIPE WATER LINE INSIDE WESTERN MOST BAY OF EXISTING BRIDGE
D) INSTALL 12 KV LINE INSIDE EXISTING 18" DUCTILE IRON PIPE LOCATED IN EASTERN MOST BAY OF EXISTING BRIDGE

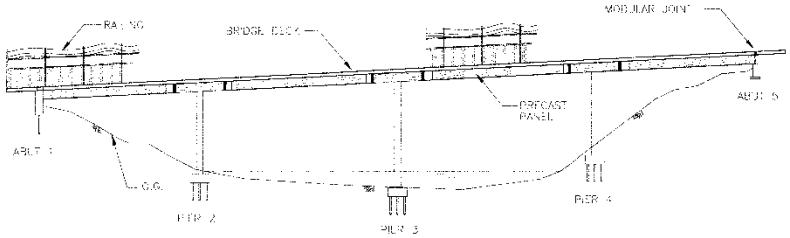

STAGE 7

A) CAST DECK CLOSURE POUR BETWEEN EXISTING BRIDGE AND WIDENING, ABUTMENTS 1 AND 5 CLOSURE POUR, AND REMAINING PORTION OF INTERMEDIATE DIAPHRAGMS, NO SOONER THAN 60 DAYS AFTER SECOND STAGE POST-TENSIONING
B) ERECT ARCHITECTURAL PRECAST PANELS AT GIRDER (1) OF WIDENING
C) PLACE JOINTS, BARRIERS, AND RAILING PER CONSTRUCTION STAGING SHEETS
D) REMOVE TRESTLE AND FALSEWORK PER SPECIAL PROVISIONS
E) OVERLAY BRIDGE PER TRAFFIC STAGING PLANS

GENERAL NOTES:

1. GENERAL CONTRACTOR TO VERIFY ALL DIMENSIONS PRIOR TO RETURNING (1) SET OF APPROVED SHOP DRAWINGS FOR FABRICATION.
2. ERECT ALL PRECAST MEMBERS WITH MARKED END ORIENTED AS SHOWN ON THE LAYOUT PLAN.
3. STORE GIRDERS ON BLOCK PLACED +/- 12" FROM ENDS.
4. FINISHES:
   - 4.1. TOP - TRANSVERSE COARSE BROOM FINISH ¼" AMPLITUDE
   - 4.2. BOTTOM - STEEL FORM FINISH
   - 4.3. SIDES - STEEL FORM FINISH
   - 4.4. ENDS - WOOD FORM FINISH
5. ALL EXPOSED CONCRETE EDGES AND CORNERS SHALL HAVE A ¾" CHAMFER.
6. CUT STRAND ENDS FLUSH WITH END OF GIRDER AND PAINT WITH TWO COATS ZRC PAINT
7. MATERIAL SPECIFICATIONS:
   - 7.1. CONCRETE
     - 7.1.1. MIX DESIGN
     - 7.1.2. f'ci = 5,000 psi
     - 7.1.3. f'c = 6,000 psi
   - 7.2. PRESTRESSING STRAND
     - 7.2.1. ASTM A416 GR 270 LOW RELAXATION
     - 7.2.2. ALL STRANDS 0.6" DIAMETER
   - 7.3. REINFORCING STEEL
     - 7.3.1. ASTM A706 TYPICAL
8. POST-TENSIONING MATERIAL TO BE SUPPLIED TO CON-FAB LATHROP PLANT BY P/T SUPPLIER.

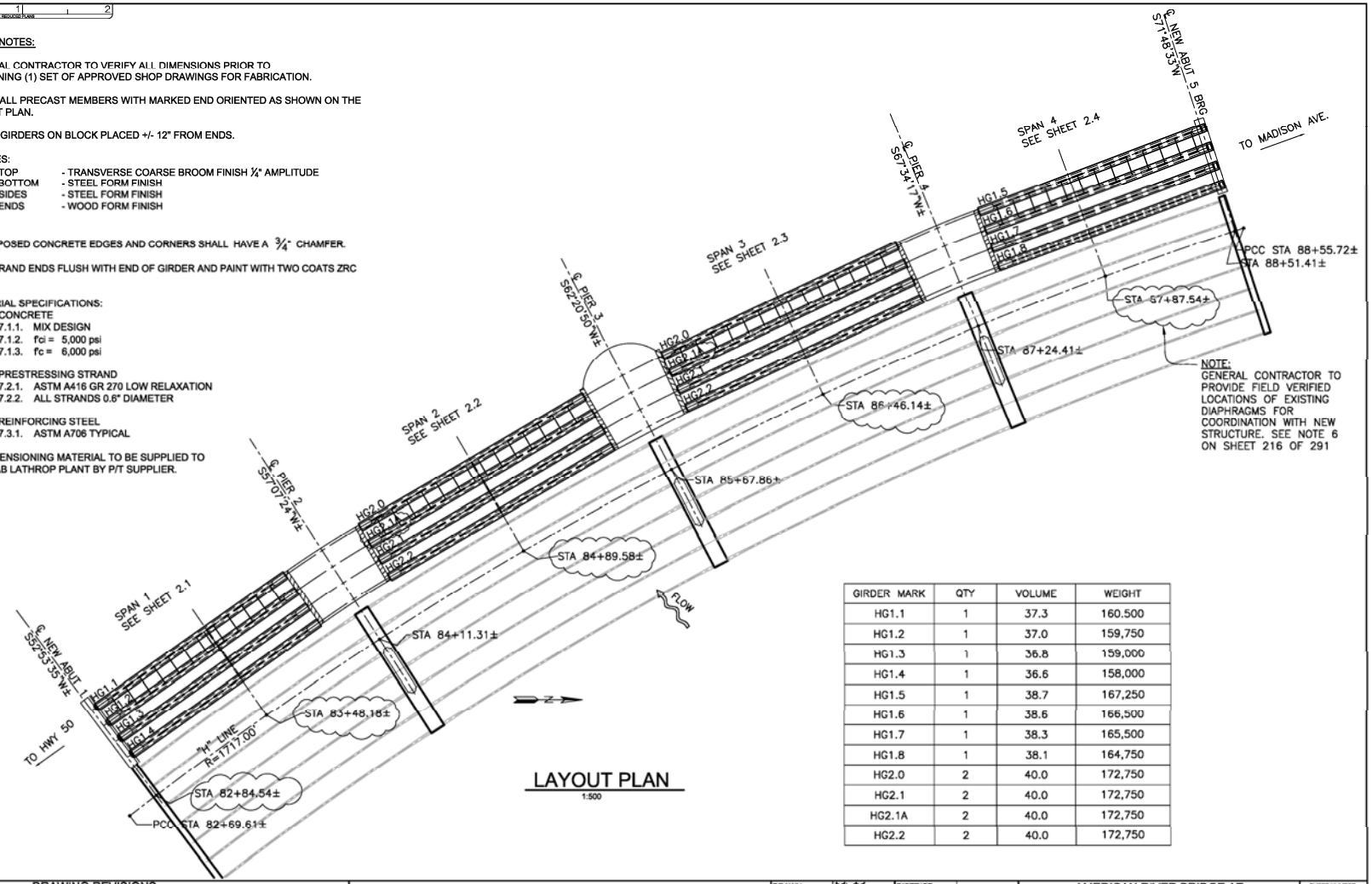

LAYOUT PLAN
1:500

GIRDER MARK	QTY	VOLUME	WEIGHT
HG1.1	1	37.3	160.500
HG1.2	1	37.0	159,750
HG1.3	1	36.8	159,000
HG1.4	1	36.6	158,000
HG1.5	1	38.7	167,250
HG1.6	1	38.6	166,500
HG1.7	1	38.3	165,500
HG1.8	1	38.1	164,750
HG2.0	2	40.0	172,750
HG2.1	2	40.0	172,750
HG2.1A	2	40.0	172,750
HG2.2	2	40.0	172,750

DRAWING REVISIONS

NO.	DESCRIPTION	DATE	BY
2	REVISED PER SUBMITTAL COMMENTS	9/24/09	MVM
1	ADDED PIECE MARK HG2.1A	9/2/09	MVM

Con-Fab California Corporation
1910 E. Lathrop Road, Lathrop, CA 95330, Phone (209) 249-4700, Fax (209) 249-4725
701 Golds Avenue, Shafter, CA 93263, Phone (661) 630-7162, Fax (661) 630-7166

DRAWN	HYT	DISTRICT	-
CHECKED	BRK	COUNTY	SACRAMENTO
JOB NUMBER	B09-003	ROUTE	-
DATE	JULY 2009	BRIDGE NO.	24C-100
CONTRACT NO.	NOT CALTRANS	POST MILE	-

AMERICAN RIVER BRIDGE AT HAZEL AVENUE (WIDENING)
LAYOUT PLAN AND GENERAL NOTES

SHEET NUMBER: 2.0 OF 40 SHEETS

NO FISHING

TEREX
JLG
RSC

CAUTION

24 x 162 x 60

Meanwhile, back at the precasting yard …..

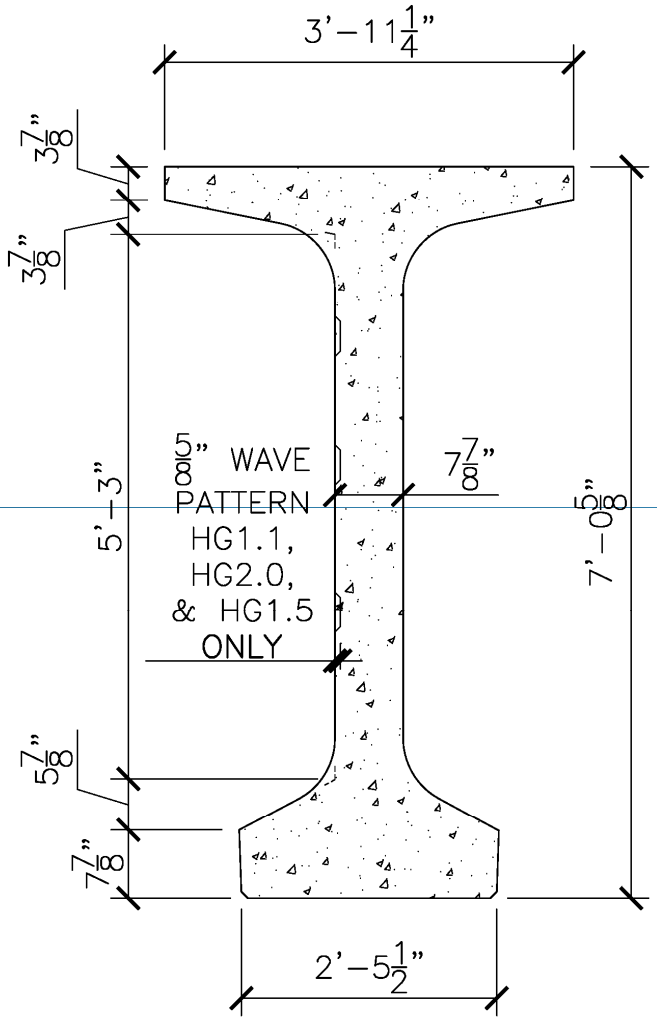

A TYPICAL GIRDER SECTION

SCALE: 3/8" = 1'-0"

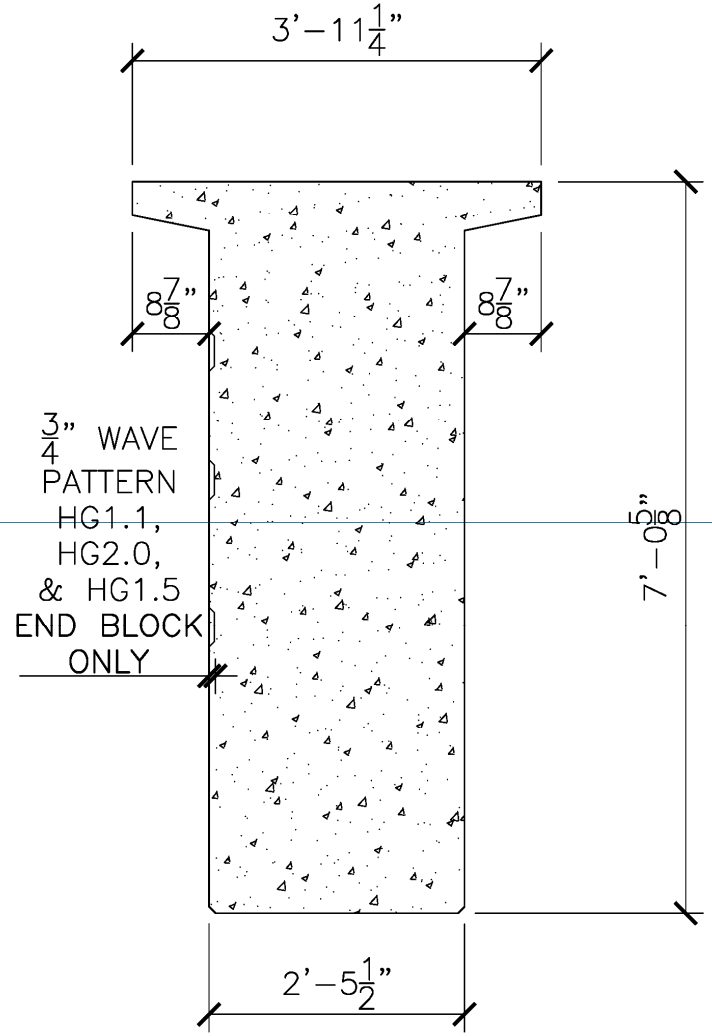

B GIRDER SECTION AT ENDBLOCK

SCALE: 3/8" = 1'-0"

Con-Fab California Corporation

American River Bridge At Hazel Ave

7'-0" Bulb Tee f'ci = 5000 psi

L_{bed}= 150 ft f'c = 6000 psi

Pour No.	Piece Mark	Span	Overall Length	Weight (Lbs)	Interior / Exterior	Remarks				Concrete Volume (CY)	Scheduled Casting	Actual Casting
1	HG2.1	2	120'-5.500"	172,750	Int.					40.0	29-Sep-09	29-Sep-09
2	HG2.1	2	120'-5.500"	172,750	Int.					40.0	30-Sep-09	30-Sep-09
3	HG2.1a	3	120'-5.500"	172,750	Int.					40.0	01-Oct-09	01-Oct-09
4	HG2.1a	3	120'-5.500"	172,750	Int.					40.0	02-Oct-09	02-Oct-09
5	HG2.2	2	120'-4.750"	172,750	Int.					40.0	05-Oct-09	05-Oct-09
6	HG2.2	3	120'-4.750"	172,750	Int.					40.0	06-Oct-09	06-Oct-09
7	HG1.2	1	107'-8.625"	159,750	Int.		P/T Bearing Plates			37.0	07-Oct-09	08-Oct-09
8	HG1.3	1	107'-4.750"	159,000	Int.		P/T Bearing Plates			36.8	08-Oct-09	09-Oct-09
9	HG1.4	1	107'-1.000"	158,000	Int.		P/T Bearing Plates			36.6	09-Oct-09	12-Oct-09
10	HG1.6	4	112'-9.750"	166,500	Int.		P/T Bearing Plates		Sole Plate	38.6	12-Oct-09	14-Oct-09
11	HG1.7	4	112'-6.250"	165,500	Int.		P/T Bearing Plates		Sole Plate	38.3	13-Oct-09	15-Oct-09
12	HG1.8	4	112'-2.750"	164,750	Int.		P/T Bearing Plates		Sole Plate	38.1	14-Oct-09	16-Oct-09
13	HG1.5	4	113'-1.500"	167,250	Ext.	Wave Pattern	P/T Bearing Plates	Falsework Ins.	Sole Plate	38.7	15-Oct-09	22-Oct-09
14	HG2.0	2	120'-6.000"	172,750	Ext.	Wave Pattern		Falsework Ins.		40.0	19-Oct-09	26-Oct-09
15	HG2.0	2	120'-6.000"	172,750	Ext.	Wave Pattern		Falsework Ins.		40.0	19-Oct-09	28-Oct-09
16	HG1.1	1	108'-0.500"	160,500	Ext.	Wave Pattern	P/T Bearing Plates	Falsework Ins.		37.3	16-Oct-09	02-Nov-09

CONCRETE INC.

'50D
JATCO

MI-JACK
50D
JATCO

MI-JACK

MI-JACK

MI-JACK

Exterior Girders With Waveform Pattern

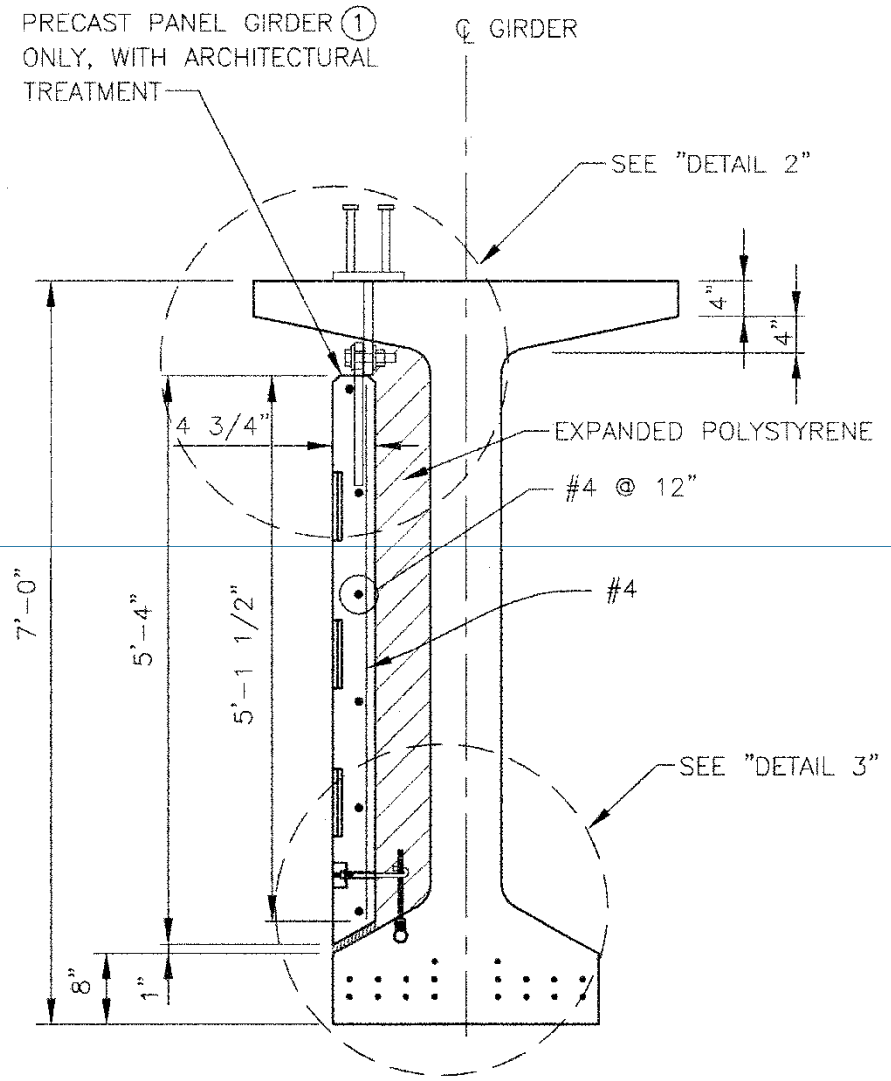

TYPICAL PRECAST PANEL SECTION

SCALE: 3/4" = 1'-0"

T.13.050

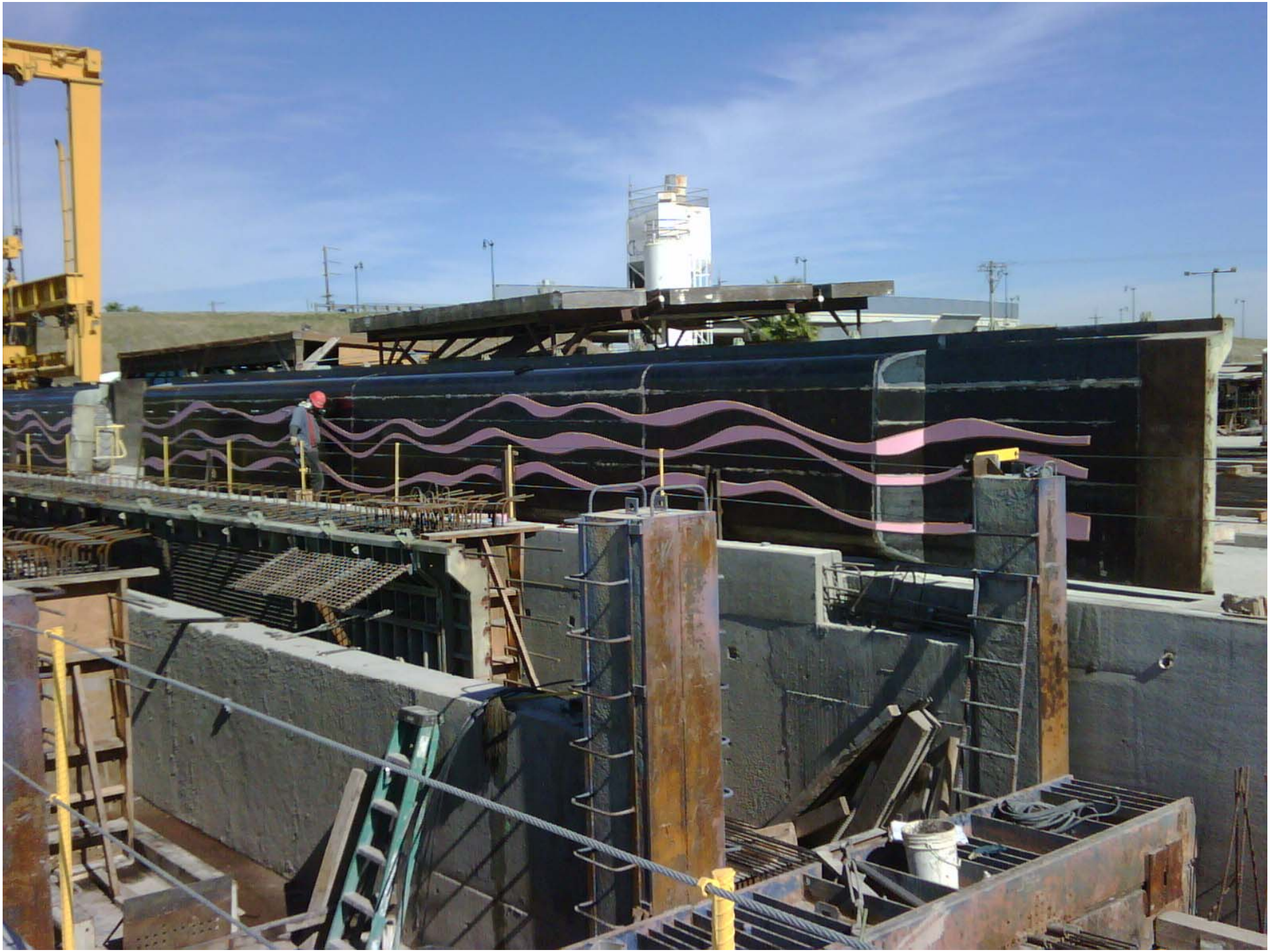

Girder Erection

June12-13, 2010

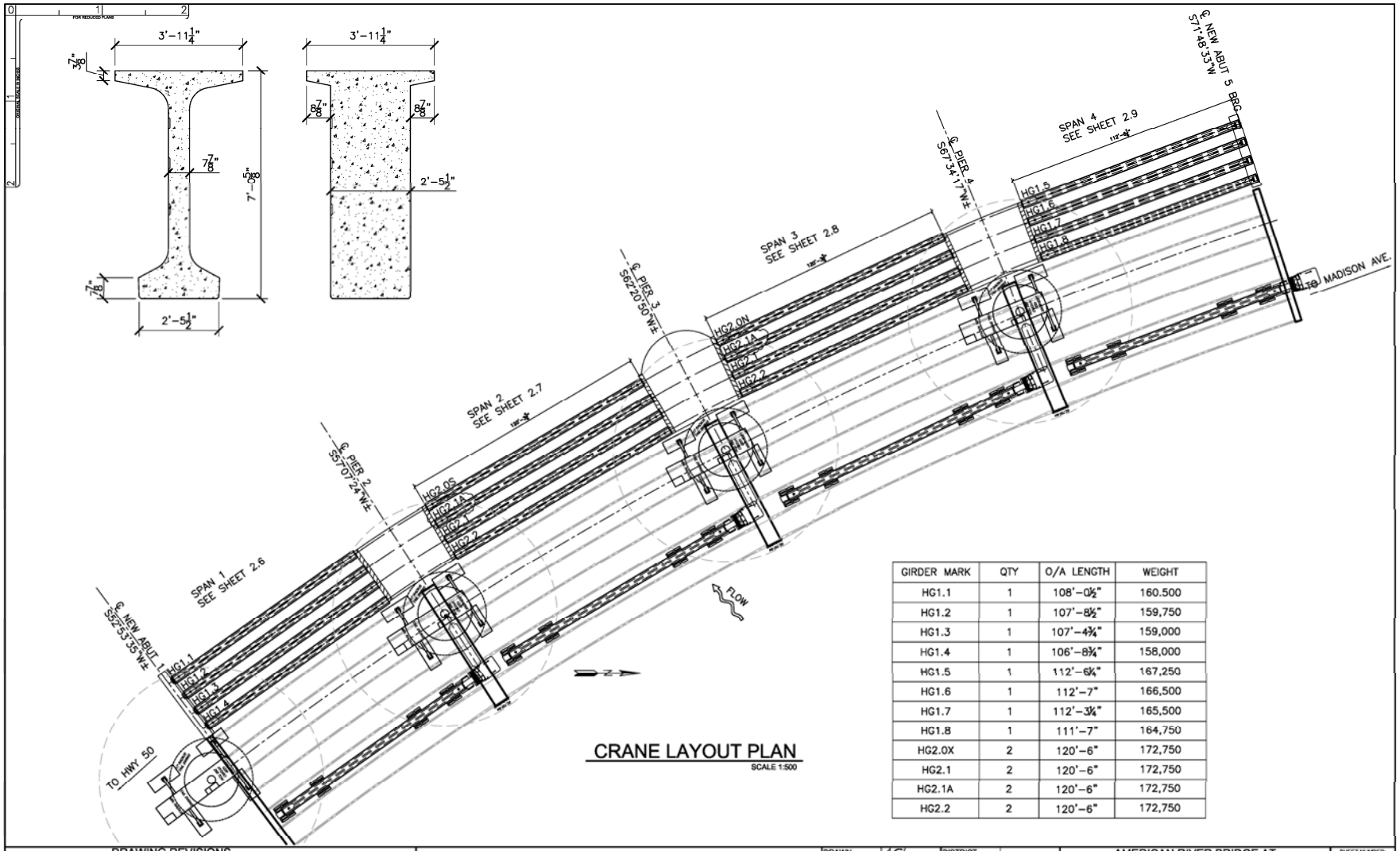

CRANE LAYOUT PLAN

SCALE 1:500

GIRDER MARK	QTY	O/A LENGTH	WEIGHT
HG1.1	1	108'-0½"	160.500
HG1.2	1	107'-8½"	159,750
HG1.3	1	107'-4¾"	159,000
HG1.4	1	106'-8¾"	158,000
HG1.5	1	112'-6¾"	167,250
HG1.6	1	112'-7"	166,500
HG1.7	1	112'-3¾"	165,500
HG1.8	1	111'-7"	164,750
HG2.0X	2	120'-6"	172,750
HG2.1	2	120'-6"	172,750
HG2.1A	2	120'-6"	172,750
HG2.2	2	120'-6"	172,750

DRAWING REVISIONS

NO.	DESCRIPTION	DATE	BY
2	REVISED MARK NO'S FROM HG2.0 TO HG2.0N AND HG2.0S	6/9/2010	ACL
1	MINOR REVISIONS PER REVIEW COMMENTS	2/6/2010	ACL

Con-Fab California Corporation
1910 E. Lathrop Road, Lathrop, CA 95330, Phone (209) 249-4700, Fax (209) 249-4725
701 Golde Avenue, Shafter, CA 93263, Phone (661) 630-7162, Fax (661) 630-7166

DRAWN	ACL	DISTRICT	-
CHECKED	BRK	COUNTY	SACRAMENTO
JOB NUMBER	B09-003	ROUTE	-
DATE	NOV. 2009	BRIDGE NO.	24C-100
CONTRACT NO.	4010	POST MILE	-

AMERICAN RIVER BRIDGE AT HAZEL AVENUE (WIDENING)

CRANE LAYOUT PLAN - FULL BRIDGE

SHEET NUMBER: 2.5 OF 46 SHEETS

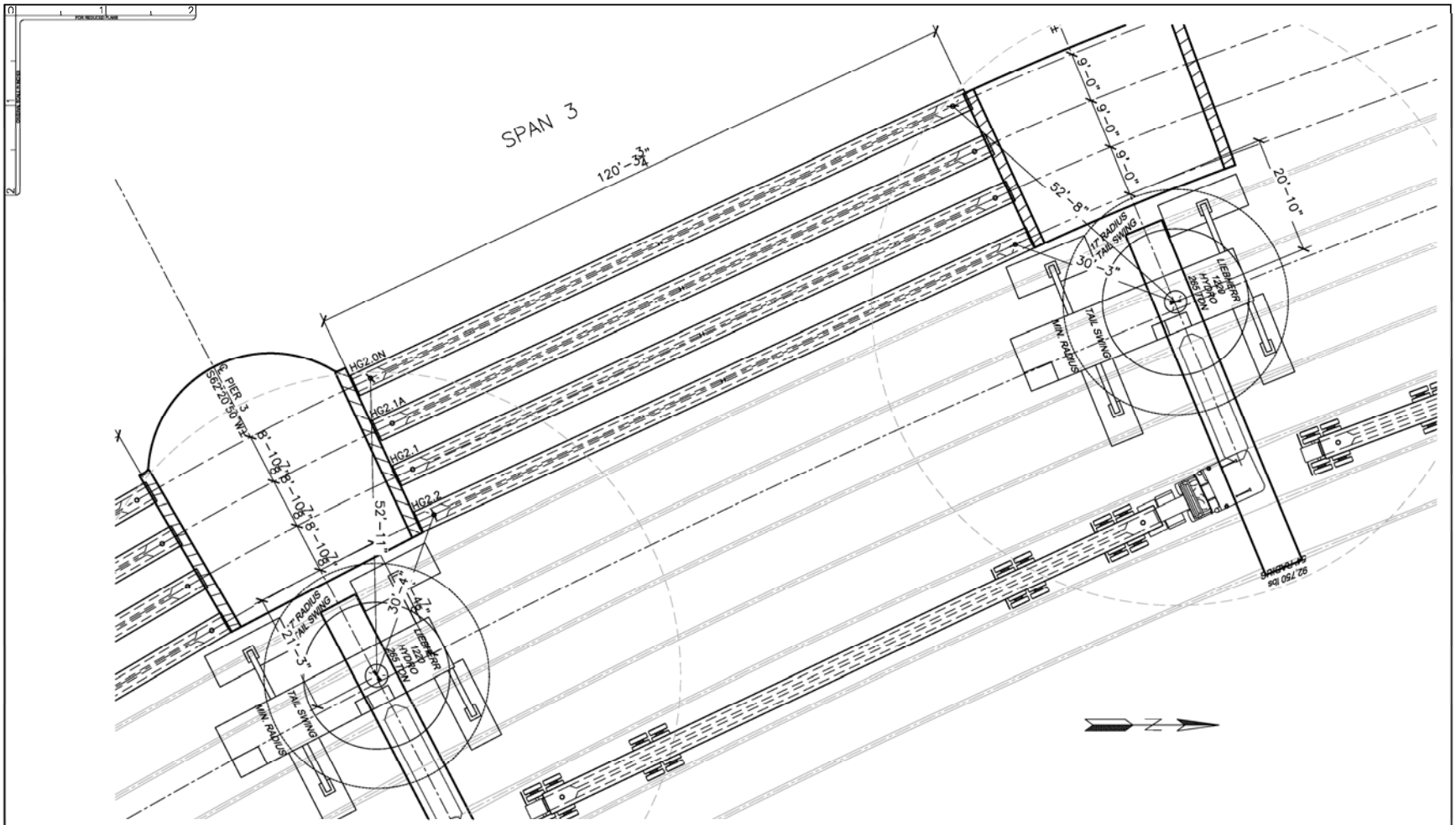

ENLARGED CRANE LAYOUT PLAN - SPAN 3

SCALE: 1/16" = 1'-0"

DRAWING REVISIONS			
2	REVISED MARK NO'S FROM HG2.0 TO HG2.0N AND HG2.0S	6/9/2010	ACL
1	MINOR REVISIONS PER REVIEW COMMENTS	2/6/2010	ACL
NO.	DESCRIPTION	DATE	BY

Con-Fab California Corporation

1910 E. Lathrop Road, Lathrop, CA 95330, Phone (209) 249-4700, Fax (209) 249-4725
701 Golds Avenue, Shafter, CA 93263, Phone (661) 630-7162, Fax (661) 630-7166

DRAWN	ACL	DISTRICT	-
CHECKED	BRK	COUNTY	SACRAMENTO
JOB NUMBER	B09-003	ROUTE	-
DATE	NOV. 2009	BRIDGE NO.	24C-100
CONTRACT NO.	4010	POST MILE	-

AMERICAN RIVER BRIDGE AT HAZEL AVENUE (WIDENING)

CRANE LAYOUT PLAN - SPAN 3

SHEET NUMBER: 2.8 OF 46 SHEETS

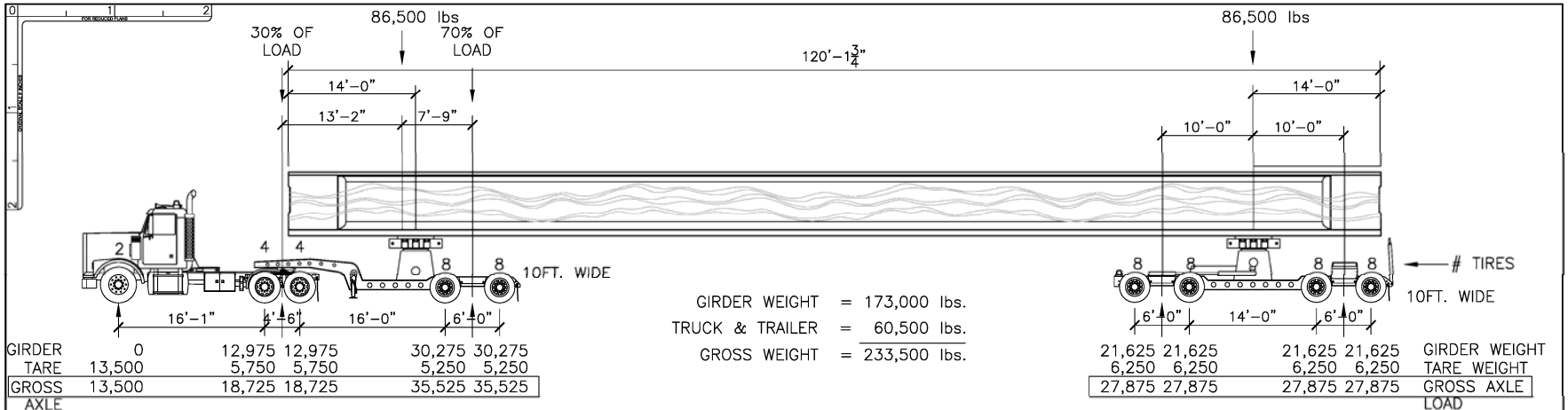

HAZEL AVE. 9 AXLE BOLSTER SET-UP TRUCKING LOADS

SCALE: 3/32" = 1'-0"

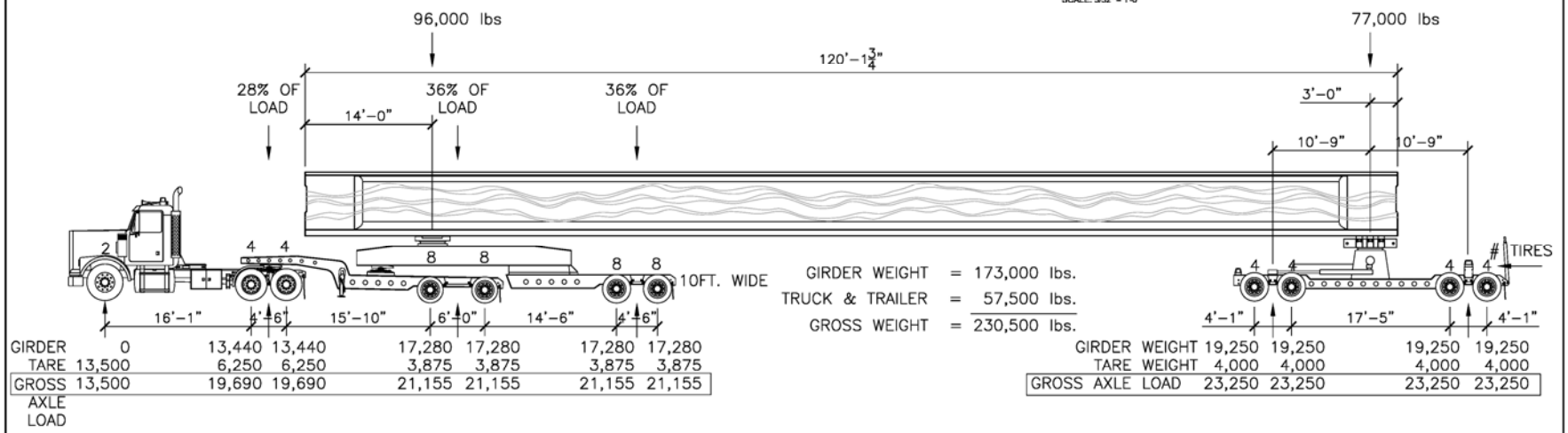

HAZEL AVE. 11 AXLE BOLSTER SET-UP TRUCKING LOADS

SCALE: 3/32" = 1'-0"

DRAWING REVISIONS			
1	MINOR REVISIONS PER REVIEW COMMENTS	2/6/2010	ACL
NO.	DESCRIPTION	DATE	BY

Con-Fab California Corporation
1910 E. Lathrop Road, Lathrop, CA 95330, Phone (209) 249-4700, Fax (209) 249-4725
701 Golds Avenue, Shafter, CA 93263, Phone (661) 630-7162, Fax (661) 630-7166

DRAWN	ACL	DISTRICT	-
CHECKED	BRK	COUNTY	SACRAMENTO
JOB NUMBER	B09-003	ROUTE	-
DATE	NOV. 2009	BRIDGE NO.	24C-100
CONTRACT NO.	4010	POST MILE	-

AMERICAN RIVER BRIDGE AT HAZEL AVENUE (WIDENING)

TRUCKING LOADS

SHEET NUMBER: 2.10 OF 46 SHEETS

OVERSIZE LOAD

OVERSIZE LOAD
L4
L4
Reeve
Reeve
CAUTION

OVERSIZE LOAD

OVERSIZE LOAD
80

FREIGHTLINER
3
ERSIZE LOAD
UP80170

BIGGE
BIGGE
BIGGE
BIGGE

BIGGE
BIGGE
BIGGE
BIGGE
BIGGE
BIGGE

BIGGE
BIGGE
BIGGE
BIGGE
BIGGE
BIGGE
OVERSIZE LOAD

BIGGE
BIGGE
BIGGE

BIGGE
LIEBHERR

BIGGE
14 x 117 x 25

N
BIGGE
BIGGE

BIGGE
BIGGE
BIGGE
BIGGE
BIGGE
BIGGE

Bigge

BIGGE

BIGGE

BIGGS
14 X 117 X 25

BIGGE
BIGGE
BIGGE
BIGGE

BIGGE
BIGGE
BIGGE

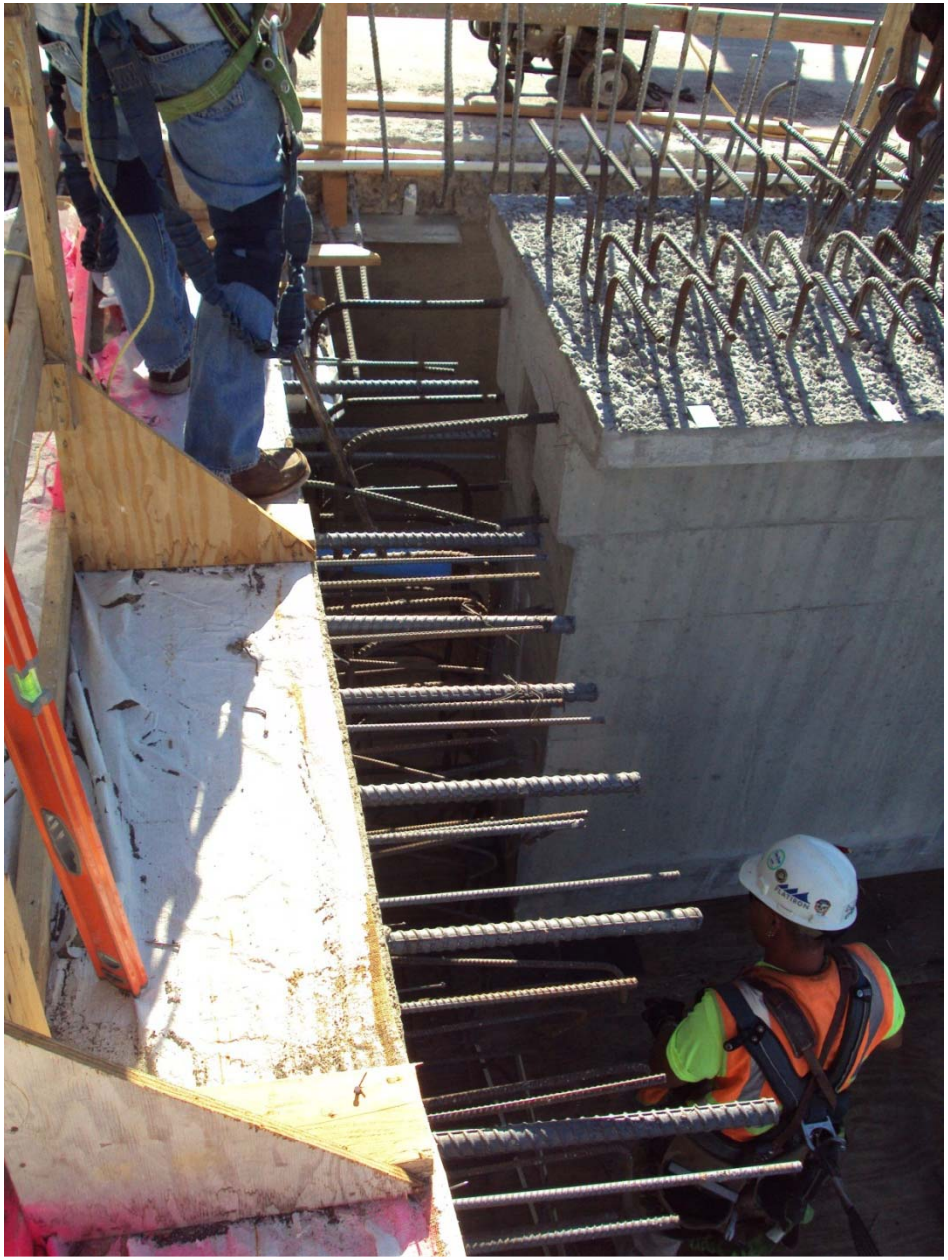

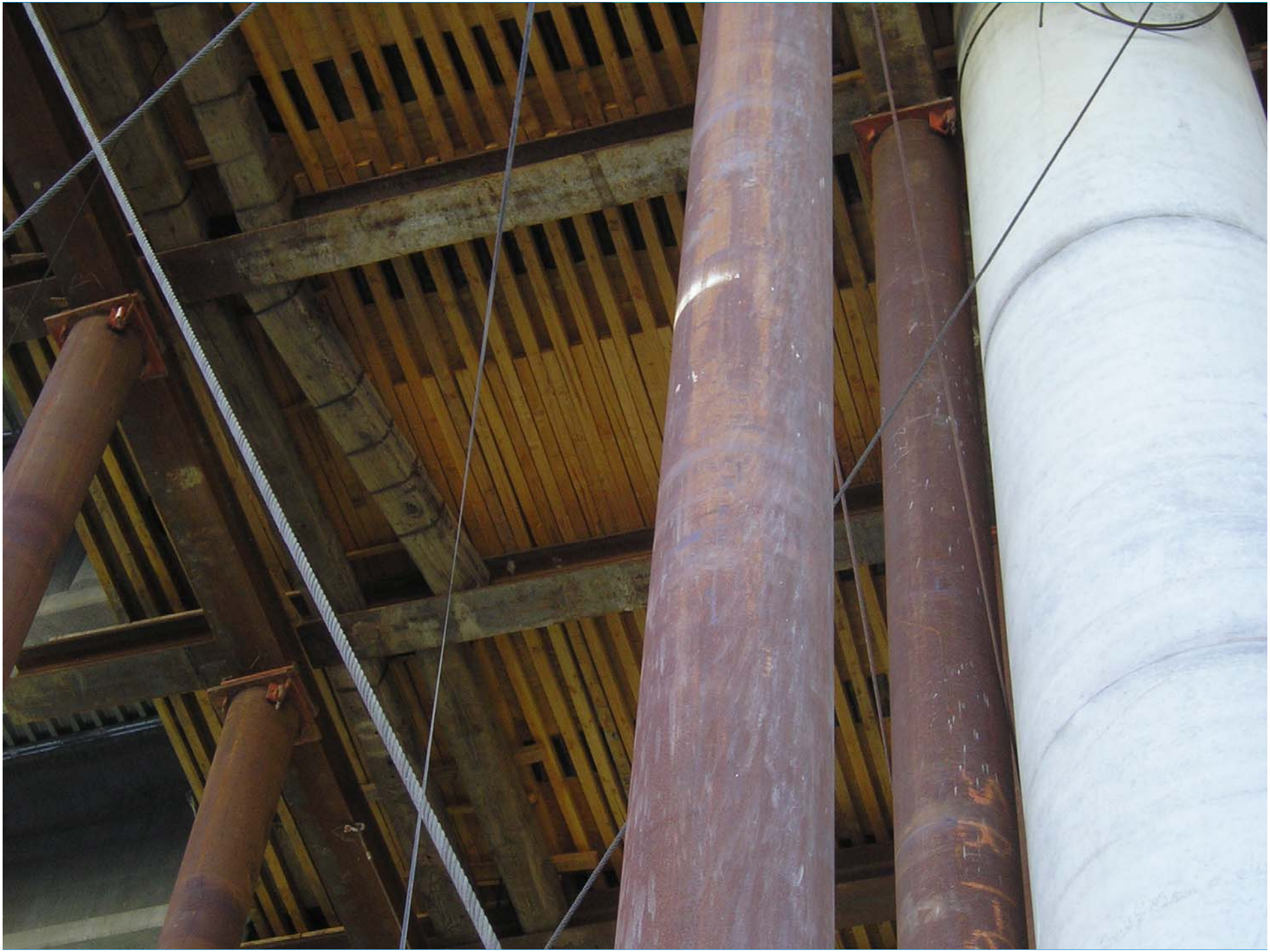
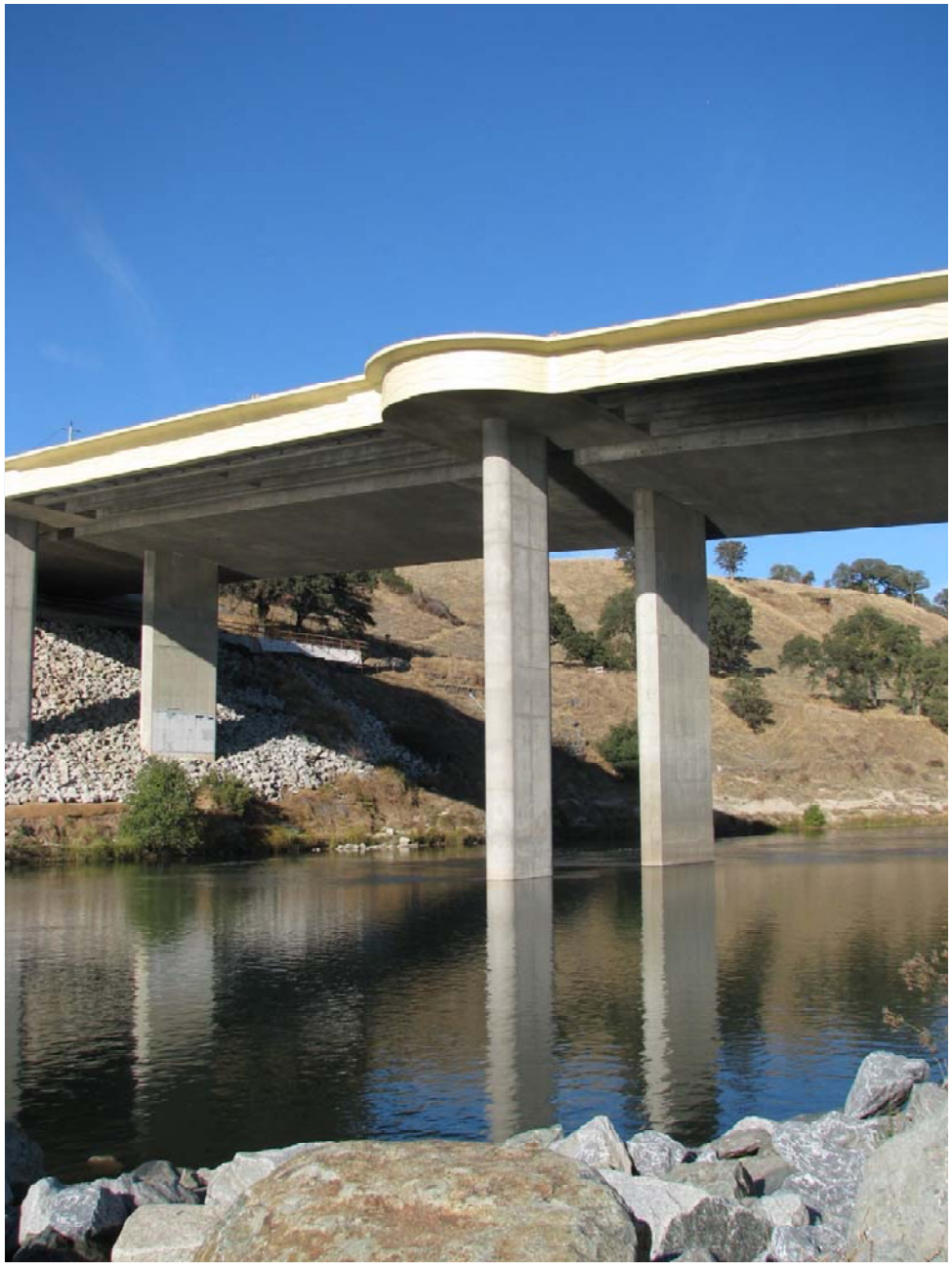
24x 162x 60
24x 162x 60
14x120x40