ARCHITECTURAL
Precast Concrete

PCI

Third Edition

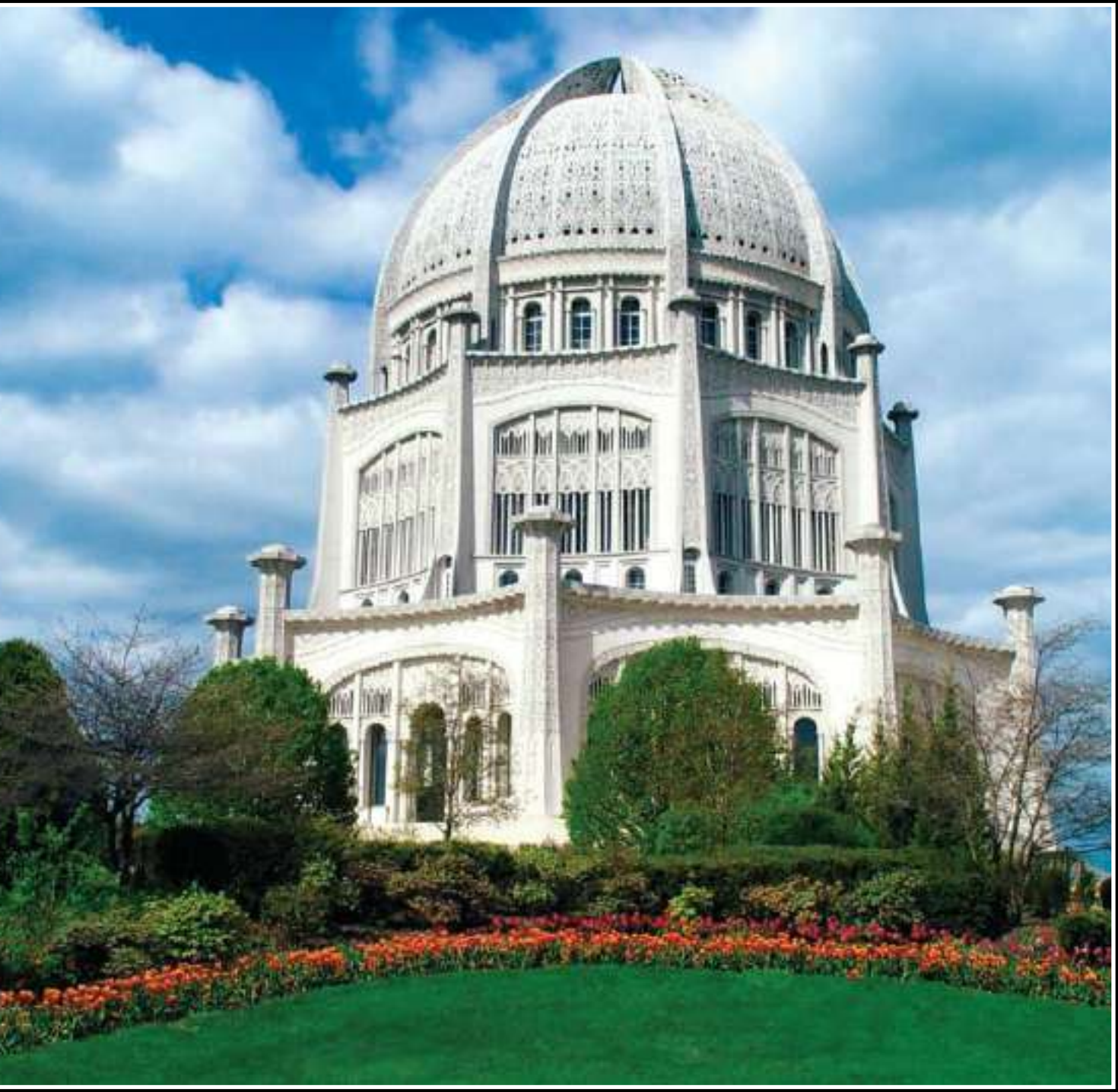

Baha'i House of Worship
Wilmette, Illinois;
Architect: Louis Bourgeois.

ARCHITECTURAL PRECAST CONCRETE

THIRD EDITION

PCI™ Precast/Prestressed Concrete Institute
209 W. Jackson Boulevard | Suite 500 | Chicago | IL 60606-6938

Substantial effort has been made to ensure that all data and information in this manual are accurate. However, PCI cannot accept responsibility for any errors or oversights in the use of material or in the preparation of design documens. This publication is intended for use by personnel competent to evaluate the significance and limitations of its contents and able to accept responsibility for the application of the material it contains. Special conditions on a project may require more specific evaluation and practical technical judgment.

While every effort has been made to prepare this publication as best practices standard for the industry, it is possible that there may be some conflicts between the material herein and local practices.

MNL-122

Copyright ©2007

By Precast/Prestressed Concrete Institute

First Edition, First Printing, 1973
First Edition, Second Printing, 1974
Second Edition, First Printing, 1989
Third Edition, First Printing, 2007

All rights reserved. This book or any part thereof may not be reproduced in any form without the written permission of the Precast/Prestressed Concrete Institute.

Library of Congress Catalog Card Number 89-062038

ISBN 978-0-937040-78-3 Printed in Canada

FSC
Mixed Sources
Product group from well-managed forests and other controlled sources
www.fsc.org Cert no. SW-COC-1271
© 1996 Forest Stewardship Council

The Design Manual for the Architect represents years of intensive work and study within and outside the Precast/Prestressed Concrete Institute (PCI). The following Committee has accomplished the task of reflecting and refining these many viewpoints:

PCI ARCHITECTURAL PRECAST CONCRETE COMMITTEE

SIDNEY FREEDMAN, Editor

GEORGE BATY
CHARLES L. FISTER
GARRY FREES
DALE GROFF
DON HALL
MARVIN F. HARTSFIELD*
CATHY HIGGINS
TOM HILL
LARRY ISENHOUR*
TOM H. KELLEY
ALLAN R. KENNEY
GERVASIO KIM
EDWARD S. KNOWLES*
JIM LEWIS
CHARLES LOWE
PAT O'BRIEN
STEVEN P. OTT
BRUCE D. TAYLOR
RANDY WILSON

**Chair during preparation of current edition*

ACKNOWLEDGEMENTS

The PCI Architectural Precast Concrete Committee wishes to acknowledge the considerable assistance of the following individuals in review and preparation of this Manual: Donald Benz; Thomas N. Burnham; Richard Fencl; Eve Hinman; Roman Kucharszyk; Jeff LaRue; Ray A. McCann; Richard Rush; Timothy T. Taylor; Paul Todd; Joseph Trammell; Martha G. Van Geem – and the many individuals on the PCI Technical Activities Committee, too numerous to identify, who provided extra effort in their reviews. Special thanks are extended to Jim Henson and Mark Leader for layout and graphic design.

TABLE OF CONTENTS

■ **PREFACE** i

■ **CHAPTER ONE – STATE-OF-THE-ART** 1
1.1 MANUAL CONTENT AND CONCEPTS 1
1.2 APPLICATIONS OF ARCHITECTURAL PRECAST CONCRETE 2
1.3 MISCELLANEOUS USES OF PRECAST CONCRETE 24
1.4 BENEFITS AND ADVANTAGES OF ARCHITECTURAL PRECAST CONCRETE 35
1.5 QUALITY ASSURANCE AND CERTIFICATION PROGRAMS 38
1.5.1 Plant Certification Program 38
1.5.2 Plant Quality Personnel Certification 39
1.5.3 Field Certification Program 39
1.6 DEFINITIONS 39

■ **CHAPTER TWO – DESIGN CONCEPTS RELATED TO USAGE AND ECONOMICS** 45
2.1 GENERAL COST FACTORS 45
2.2 DESIGN ECONOMY 50
2.2.1 Repetition 50
2.2.2 Mold Costs 54
2.2.3 Other Forming Considerations 56
2.2.4 Panel Size and Panelization 58
2.2.5 Material and Labor Costs and Uniformity of Appearance 59
2.2.6 Design Options 61
2.3 TOTAL WALL ANALYSIS 62
2.4 PRECAST CONCRETE PANELS USED AS CLADDING 62
2.4.1 General 62
2.4.2 Solid Wall Panels 64
2.4.3 Window Wall Panels 65
2.4.4 Spandrel Panels 66
2.4.5 Column Covers and Mullions 68
2.4.6 Wall-Supporting Units 69
2.5 LOADBEARING WALL PANELS OR SPANDRELS 73
2.5.1 General 73
2.5.2 Shapes and Sizes 78
2.5.3 Design Considerations 81
2.6 PRECAST CONCRETE PANELS USED AS SHEARWALLS 92
2.7 PRECAST CONCRETE AS FORMS FOR CAST-IN-PLACE CONCRETE 94

■ **CHAPTER THREE – SURFACE AESTHETICS** 99
3.1 GENERAL 99
3.2 UNIFORMITY AND DEVELOPMENT OF SAMPLES 99
3.2.1 Uniformity 100
3.2.2 Development of Samples 102
3.2.3 Pre-Bid Samples 104
3.2.4 Production Approval Samples 104
3.2.5 Assessment of Samples 108
3.2.6 Assessment of Concrete Mixtures 109
3.3 SHAPE, FORM, AND SIZE 111
3.3.1 Open or Closed Units 111
3.3.2 Drafts 112
3.3.3 Reveals and Demarcation Features 113
3.3.4 Sculpturing 120
3.3.5 Bullnoses, Arrises and Radiused Precast Concrete 125
3.3.6 Cornices and Eyebrows 131
3.3.7 Edges, Corners and Returns 131
3.3.8 Returns in Relation to Finishes 138

3.3.9 Two-Stage or Sequential Precasting 139
3.3.10 Overall Panel Size 140
3.4 COLORS AND TEXTURES 144
3.4.1 Colors 144
3.4.2 Textures 150
3.5 FINISHES 153
3.5.1 General 153
3.5.2 Smooth-As-Cast 153
3.5.3 Exposed Aggregate by Chemical Retarders and Water Washing 156
3.5.4 Form Liners and Lettering 160
3.5.5 Sand or Abrasive Blasting 169
3.5.6 Acid Etching 174
3.5.7 Multiple Mixtures and Textures within a Single Unit 177
3.5.8 Tooling or Bushhammering 182
3.5.9 Sand Embedment 186
3.5.10 Clay Product-Faced Precast Concrete 187
3.5.10.1 General 187
3.5.10.2 General considerations 188
3.5.10.3 Clay product properties 190
3.5.10.4 Clay product selection 190
3.5.10.5 Design considerations 200
3.5.10.6 Production and construction considerations 203
3.5.10.7 Applications of clay products after casting of panel 204
3.5.11 Honed or Polished 206
3.5.12 Stone Veneer-Faced Precast Concrete 211
3.5.12.1 General considerations 211
3.5.12.2 Stone properties 212
3.5.12.3 Stone sizes 213
3.5.12.4 Design considerations 214
3.5.12.5 Anchorage of stone facing 214
3.5.12.6 Panel watertightness 217
3.5.12.7 Veneer jointing 217
3.5.12.8 Repair 218
3.5.12.9 Applications 218
3.5.13 Applied Coatings 229
3.5.14 Architectural Trim Units 231
3.5.15 Matching of Precast and Cast-in-Place Concrete 238
3.5.16 Finishing of Interior Panel Faces 239
3.5.17 Acceptability of Appearance 240
3.5.18 Repair and Patching 241
3.6 WEATHERING 242
3.6.1 General 242
3.6.2 Surface Finish 248
3.6.3 Deposits From an Adjacent Surface or Material 250
3.6.4 Efflorescence on Precast Concrete 250
3.6.4.1 What is efflorescence 251
3.6.4.2 What causes efflorescence 252
3.6.4.3 Minimizing efflorescence 253
3.6.5 Design of Concrete for Weathering 255
3.6.6 Surface Coatings and Sealers 256
3.6.7 Maintenance and Cleaning 259

■ CHAPTER FOUR – DESIGN 263
4.1 DESIGN AND CONSTRUCTION RESPONSIBILITY 263
4.1.1 General 263

4.1.2 Responsibilities of the Architect 263
4.1.3 Responsibilities of the Engineer of Record 266
4.1.4 Responsibilities of the General Contractor / Construction Manager 267
4.1.4.1 Bid process 268
4.1.5 Responsibilities of the Precaster 269
4.1.6 Responsibilities of the Erector 270
4.2 STRUCTURAL DESIGN 271
4.2.1 General Considerations 271
4.2.1.1 Design objectives 271
4.2.1.2 Design criteria 272
4.2.1.3 Checklist 273
4.2.2 Determination of Loads 274
4.2.3 Volume Changes 275
4.2.3.1 Temperature effects 275
4.2.3.2 Shrinkage 275
4.2.3.3 Creep 276
4.2.4 Design Considerations for Non-Loadbearing Wall Panels 276
4.2.4.1 Deformations 277
4.2.4.2 Column covers and mullions 280
4.2.5 Design Considerations for Loadbearing Wall Panels 281
4.2.6 Design Considerations for Non-Loadbearing Spandrels 282
4.2.7 Design Considerations for Loadbearing Spandrels 285
4.2.8 Design Considerations for Stacking Non-Loadbearing Panels 286
4.2.9 Dimensioning of Precast Concrete Units 287
4.2.10 Handling and Erection Considerations 290
4.2.10.1 Wall panels 295
4.2.10.2 Columns 296
4.2.10.3 Spandrels 297
4.2.10.4 Column covers and mullions 297
4.2.10.5 Soffits 297
4.2.10.6 Protection during erection 297
4.3 CONTRACT DOCUMENTS 298
4.4 REINFORCEMENT 300
4.4.1 General 300
4.4.2 Welded Wire Reinforcement 301
4.4.3 Reinforcing Bars 302
4.4.4 Prestressing Steel 302
4.4.5 Shadow Lines–Reflection of Reinforcing Steel 304
4.4.6 Tack Welding 305
4.4.7 Corrosion Resistance of Reinforcement 305
4.4.7.1 Chlorides 306
4.4.7.2 Concrete cover 306
4.4.7.3 Permeability 307
4.4.7.4 Carbonation 307
4.4.7.5 Crack widths 309
4.4.7.6 Corrosion protection 310
4.5 CONNECTIONS 312
4.5.1 General 312
4.5.1.1 Design Responsibilities 313
4.5.2 Design Considerations 313
4.5.2.1 Panel configuration 315
4.5.2.2 Panel–connection–structure interaction 316
4.5.2.3 Tolerances and product interfacing 320
4.5.2.4 Other detailing information 321

4.5.3 Handling and Erection Considerations 322
4.5.4 Handling and Lifting Devices 324
4.5.5 Manufacturing Considerations 325
4.5.6 Connection Hardware and Materials 325
4.5.7 Corrosion Protection of Connections 326
4.5.8 Fasteners in Connections 327
4.5.9 Supply of Hardware for Connections 330
4.5.10 Connection Details 331
4.6 TOLERANCES 347
4.6.1 General 347
4.6.2 Product Tolerances 347
4.6.3 Erection Tolerances 350
4.6.4 Interfacing Tolerances 363
4.7 JOINTS 364
4.7.1 General 364
4.7.2 Types of Joints 365
4.7.3 Expansion Joints 366
4.7.4 Number of Joints 368
4.7.5 Location of Joints 368
4.7.6 Width and Depth of Joints 369
4.7.7 Sealant Materials and Installation 371
4.7.8 Architectural Treatment 375
4.7.9 Fire-Protective Treatment 376
4.7.10 Joints in Special Locations 376

■ CHAPTER FIVE – OTHER ARCHITECTURAL DESIGN CONSIDERATIONS 379
5.1 GENERAL 379
5.2 WINDOWS AND GLAZING 379
5.2.1 Design Considerations 379
5.2.2 Window Installation 384
5.2.3 Other Attached or Incorporated Materials 386
5.2.4 Glass Staining or Etching 387
5.3 ENERGY CONSERVATION AND CONDENSATION CONTROL 390
5.3.1 Glossary 390
5.3.2 Energy Conservation 391
5.3.3 Thermal Resistance (R-Value) 402
5.3.4 Heat Capacity 410
5.3.5 Thermal Mass 412
5.3.6 Condensation Control 417
5.3.6.1 Climates 418
5.3.6.2 Sources of moisture 418
5.3.6.3 Condensation on surfaces 420
5.3.6.4 Condensation within walls and use of vapor retarders 423
5.3.6.5 Air infiltration, exfiltration, and air barriers 444
5.3.6.6 Considerations at windows 447
5.3.7 Application of Insulation 447
5.3.8 Precast Concrete Sandwich Panels 450
5.4 SUSTAINABILITY 459
5.4.1 Glossary 459
5.4.2 Sustainability Concepts 460
5.4.2.1 Triple bottom line 461
5.4.2.2 Cost of building green 461
5.4.2.3 Holistic/integrated design 462
5.4.2.4 3 R's–reduce, reuse, recycle 463

5.4.3 Life Cycle 463
5.4.3.1 Life cycle cost and service life 463
5.4.3.2 Environmental life cycle inventory and life cycle assessment 464
5.4.3.3 Concrete and concrete products LCI 465
5.4.3.4 Life cycle impact assessment 467
5.4.4 Green Building Rating Systems 469
5.4.4.1 LEED 469
5.4.4.2 Energy Star 470
5.4.4.3 Green Globes 472
5.4.5 Durability 473
5.4.5.1 Corrosion resistance 473
5.4.5.2 Inedible 473
5.4.6 Resistant to Natural Disasters 473
5.4.6.1 Fire Resistance 473
5.4.6.2 Tornado, hurricane, and wind resistance 474
5.4.6.3 Flood resistance 474
5.4.6.4 Earthquake resistance 474
5.4.7 Weather Resistance 474
5.4.7.1 High humidity and wind-driven rain 474
5.4.7.2 Ultraviolet resistance 475
5.4.8 Mitigating the Urban Heat Island Effect 475
5.4.8.1 Warmer surface temperatures 475
5.4.8.2 Smog 475
5.4.8.3 Albedo (solar reflectance) 475
5.4.8.4 Emittance 477
5.4.8.5 Moisture 477
5.4.8.6 Mitigation approaches 477
5.4.8.7 Thermal mass and nocturnal effects 477
5.4.9 Environmental Protection 477
5.4.9.1 Radiation and toxicity 477
5.4.9.2 Resistance to noise 478
5.4.9.3 Security and impact resistance 478
5.4.10 Precast Concrete Production 478
5.4.10.1 Constituent materials 479
5.4.11 Energy Use in Buildings 482
5.4.11.1 Energy codes 482
5.4.11.2 Lighting 484
5.4.11.3 Air infiltration 484
5.4.11.4 Advanced energy guidelines 484
5.4.12 Indoor Environmental Quality 485
5.4.13 Demolition 486
5.4.14 Innovation 486
5.4.15 Conclusion 487
5.5 ACOUSTICAL PROPERTIES 487
5.5.1 Glossary 487
5.5.2 General 488
5.5.3 Sound Levels 488
5.5.4 Sound Transmission Loss 489
5.5.5 Absorption of Sound 489
5.5.6 Acceptable Noise Criteria 491
5.5.7 Composite Wall Considerations 493
5.5.8 Leaks and Flanking 496
5.6 DESIGN CONSIDERATIONS FOR BLAST RESISTANCE 497
5.6.1 General 497

5.6.2 Blast Basics 498
5.6.3 Blast Analyses Standards 499
5.6.4 Determination of Blast Loading 500
5.6.5 Blast Effects Predictions 501
5.6.6 Standoff Distance 504
5.6.7 Design Concepts 506
5.6.8 Façade Considerations 509
5.6.9 Designing Precast Concrete Panels 509
5.6.10 Examples of Projects Designed for Blast 513
5.6.11 Connection Concepts and Details 517
5.6.12 Glazing 520
5.6.13 Initial Costs 523
5.6.14 References 524
5.7 FIRE RESISTANCE 525
5.7.1 General 525
5.7.2 Fire Endurance of Walls 527
5.7.3 Detailing of Fire Barriers 532
5.7.4 Columns and Column Covers 533
5.7.5 Protection of Reinforcing Steel 535
5.7.6 Protection of Connections 535
5.8 ROOFING 536
5.8.1 General 536
5.8.2 Flashing 536
5.8.3 Parapet Details 539
5.8.4 Scuppers 542

■ CHAPTER SIX – GUIDE SPECIFICATIONS 545
6.1 GENERAL 545
6.2 DRAWINGS AND SPECIFICATIONS 545
6.2.1 Drawings 545
6.2.2 Specifications 545
6.2.3 Coordination 545
6.2.4 Guide Specification Development 546
6.3 TYPES OF SPECIFICATIONS 546
6.4 GUIDE SPECIFICATION 547
PART 1 – GENERAL 547
PART 2 – PRODUCTS 556
PART 3 – EXECUTION 575

■ INDEX BY SUBJECTS 581

PREFACE

Architectural precast concrete is a child of the 20th century and modern technology, but it can trace its lineage back to ancient history. As such, it is a building material almost without precedent. Concrete in its cruder forms was used by the Romans in the construction of their aqueducts. Europe refined the time-tested formula in the 19th century, developing reinforced concrete that combined the compressive properties of concrete and the tensile strength of steel. Continuing technological growth and industrialization created a genuine need for new techniques and materials that could be used in prefabricated construction. Architectural precast concrete was developed to fulfill this need.

The first documented modern use of precast concrete was in the cathedral Notre Dame du Raincy in Raincy, France, by Auguste Perret in 1922. It was used as screen walls and infill in an otherwise in-situ concrete solution. In 1932 work began on producing the white concrete exposed aggregate ornamental elements for the Baha'i House of Worship (frontispiece and Fig. 1.2.1). The Depression years followed soon after, and then World War II. Following the end of the world conflict, when labor and material costs began to increase, the use of architectural precast concrete began to flourish. The development and introduction of improved transportation equipment and large tower cranes on major projects provided a ready means of hauling and lifting large precast concrete panels into place. By the mid-1960s, architectural precast concrete as cladding and loadbearing elements had gained widespread acceptance by architects and owners.

Improvements in fabricating processes allow architectural precast concrete to be produced in almost any color, form, or texture, making it an eminently practical and aesthetically pleasing building material. The term architectural precast concrete encompasses all precast concrete units employed as elements of architectural design whether defined to stand alone as an architectural statement or to complement other building materials. Concrete's moldability offers the freedom to sculpt the structure's facade in imaginative ways. It is difficult to imagine an architectural style that cannot be expressed with this material. Precast concrete is not only compatible with all structural systems, it can be designed to harmonize with, and complement, all other materials.

Throughout the formative years, the architect, the engineer, and the builder, as well as the precaster, lacked any definitive reference volume that defined and illustrated this interesting material. This lacking was both world- and language-wide.

The Precast/Prestressed Concrete Institute (PCI), a nonprofit corporation founded in 1954 to advance the design, manufacture, and use of precast and prestressed concrete, had long recognized the need for a manual to provide guidelines and recommendations pertinent to the design, detailing, and specification of architectural precast concrete. In 1973, PCI published the first edition of *Architectural Precast Concrete* and for the first time there was a comprehensive design manual on the subject of architectural precast concrete. Compiled, edited, and published by PCI, this manual presented a single authoritative reference for the architectural decision-maker.

New developments in materials, manufacturing, and erection procedures have expanded the role of architectural precast concrete in the construction industry since the first manual was written. In keeping with its policy of being a leader in the concrete industry, PCI is publishing this third edition of *Architectural Precast Concrete* in order to make state-of-the-art technology available to the architects and engineers who design and build with this versatile material.

The third edition of the manual is a major revision incorporating much of this new technology. The sections dealing with color, texture, and finishes; weathering; tolerances; connections; and thermal properties have been extensively revised. Information on sustainability and design for blast has been added. Detailed guide specifications have been modified to meet today's construction needs. In addition, the photographs used to illustrate pertinent points throughout the manual have been selected to represent the potential design opportunities for architectural precast concrete.

Numerous manufacturing and erection techniques are included in the text to provide a better understanding of design concepts and elements requiring design decisions. Design, contract drawings, and specifications are all vitally important, and should be combined with an assessment of the capability and experience of the precasters who bid on the project.

The guidelines and recommendations presented show current practices in the industry. These practices should not, however, act in any way as barriers to either architectural creativity or to potential innovations on the part of the precaster.

The practices described in this manual may be used as a basis by both architect and precaster in the development of exciting new concepts using advances in technology. This initiative will undoubtedly lead to deviations from some of the stated recommendations in the text.

The editor of the manual worked closely with the PCI Architectural Precast Concrete Committee and with the professional members of the Institute. Technical accuracy has been reviewed by architects, engineers, precast concrete producers, material and equipment suppliers, and af-

filiated industry organizations. This unique combination of various disciplines and viewpoints provides an interaction that ensures knowledge of all aspects in design, engineering, production, and erection of architectural precast concrete. Since conditions affecting the use of this material are beyond the control of the Institute, the suggestions and recommendations presented are provided without guarantee or responsibility on the part of PCI. It is assumed that each project and architect is unique, and requires different solutions for different problems. For this reason, all examples shown must be considered as suggestions rather than definitive solutions.

Architectural precast concrete combines maximum freedom of architectural expression with the economy of mass production of repetitive precast concrete elements. For this concept to function most effectively, it is strongly recommended that the architect seek counsel from local PCI and Canadian Prestressed Concrete Institute (CPCI) architectural precast concrete producers in the early design stages and throughout further development of the contract documents (see PCI website www.pci.org for local producers and resources). Many consulting engineering firms specializing in the development and design of precast concrete are also available to the project architect.

With precaster/consultant assistance, proper aesthetic, functional, structural, mechanical features and objectives may be rendered with economical detailing. Their assistance may more accurately reflect local material characteristics, manufacturing and erection efficiencies, cost factors, quality control standards, and local trade practices. A continuing dialogue between designer and precaster will ensure optimum product quality at a minimum installed construction cost.

This manual is arranged in a sequence that corresponds to the steps that an architectural/engineering firm might employ when evaluating, selecting, and incorporating materials into a construction project. Other publications of interest to the design team include *PCI Design Handbook – Precast and Prestressed Concrete* (MNL-120); *PCI Manual for Quality Control for Plants and Production of Architectural Precast Concrete Products* (MNL-117); *PCI Erector's Manual – Standards and Guidelines for the Erection of Precast Concrete Products* (MNL-127); and *PCI Erection Safety for Precast and Prestressed Concrete* (MNL-132).

Chapter 1 provides a general background concerning the ***State-of-the-Art*** of architectural precast concrete and covers the applications and benefits of architectural precast concrete along with definitions.

Chapter 2 considers ***Design Concepts Related to Usage and Economics*** for the initial evaluation and selection of architectural precast concrete for a project. The architect would primarily use this information during conceptual wall analysis. Repetition and the master mold concept portions of Chapter 2 would be of most interest to the architect's staff concerned with production and detailing.

Chapter 3 contains ***Surface Aesthetics*** design considerations and is concerned with the critical decisions the designer must make among the many available options as to color, shape, and texture. This chapter covers everything from initial samples and concrete mixture design to acceptability of appearance and weathering. Weathering should be reviewed during conceptual wall analysis.

Chapter 4 presents ***Design***. This chapter covers design responsibilities, impact of structural framing considerations, contract documents, reinforcement, connections, tolerances, and joints. The job captain, draftsman, and detailer members of the architect's staff must carefully consider these factors. They should also be familiar with the design considerations included in Chapters 2 and 3 if a sound, economical finished product is to result.

Chapter 5 reviews ***Other Architectural Design Considerations*** and covers interfacing with other materials including windows, energy conservation and condensation control, sustainability, acoustical properties, blast considerations, fire resistance, and roofing. Each requires careful consideration in developing the design criteria and working details for the architectural precast concrete systems and assemblies adjacent to the precast concrete.

Chapter 6 ***Guide Specifications*** is intended as an aid to specification writers. The information contained in this chapter should be evaluated in close coordination with the project designer and detailer to avoid creating unnecessary pitfalls in the project by providing the best possible contract documents. Specifications should be neither open to interpretation nor unnecessarily restrictive.

An ***Index*** is provided at the end of the manual for easy reference.

A design manual by its very concept can only illustrate what has been accomplished, not what can be. Any attempt to categorize and define architectural precast concrete with its myriad expressions and possibilities is not fully possible. Precast concrete is a versatile material that offers the designer the opportunity to be innovative and obtain desired design objectives that cannot be accomplished with other materials. This manual will help architects define their own potential and will provide a basis for reaching it, not by giving design alternatives, but by pointing out state-of-the-art options in using architectural precast concrete. The significance of precast concrete as a building material lies not in its ability to do new things, but in its inherent quality of being flexible enough to make a design concept become a reality.

1

Santa Monica Public Library Santa Monica, California; Architect: Moore Ruble Yudell Architects & Planners; Photo: John Edward Linden Photography.

CHAPTER ONE
STATE-OF-THE-ART

1.1 MANUAL CONTENT AND CONCEPTS

In order for the reader to derive maximum benefit from this manual, the concepts that guided its preparation are briefly outlined in this section.

Concrete is material that has been used for centuries but its present qualities and usages characterize it as modern and versatile. The color and texture possibilities along with the infinite variety of forms and shapes possible with architectural precast concrete, as a result of its plasticity, allows the designer to customize elements and overcome the monotony of many proprietary systems, the confining regularity of masonry units, and the design limitations of materials subject to the shortcomings of dies, brakes, and rollers. With precast concrete, the designer is in complete control of the ultimate form of the façade and is free of any compromise that might be traceable to a manufacturing process. Also, precast concrete has excellent inherent thermal, acoustical, fire resistive and blast resistant characteristics.

Research and quality control of concrete components has led to a better understanding of the unique potentials for precast concrete. Improvements in proportioning, mixing, placing, finishing, and curing techniques have advanced concrete qualities. These improvements have allowed design strength to be substantially increased in the last few decades. Durability, appearance, and other important aspects, such as transportation and erection, have kept pace with these developments.

By continuing to provide the designer with design freedom, the precast concrete industry has experienced steady growth since the 1960s, particularly in the ever-widening range of precast concrete applications. The widespread availability of architectural precast concrete, the nearly universal geographic distribution of the necessary raw materials, and the high construction efficiency of prefabricated components all add to the appeal of architectural precast concrete construction. Precast concrete design engineers and precasters have a high level of craftsmanship and ingenuity along with a thorough knowledge of the material and its potential in converting the designer's vision into a finished structure. Related to this knowledge must be an understanding by the designer of the important design considerations dictated by:

1. Material characteristics;
2. Wall analysis — interrelationship with other materials;
3. Weathering effects;
4. Colors, finishes, and textures; and
5. Manufacturing and erection efficiencies including cost factors, quality-control standards, and local trade practices.

These design considerations are described in considerable detail throughout this manual. It is important that the designer carefully evaluate the applicable design considerations when choosing the shape, color, and texture that will be emphasized on a project. Design considerations based upon manufacturing and erection factors are complex and varied. Because of the limitless expressions of precast concrete, such design considerations can rarely be stated in unqualified terms. It is important for the designer to know which considerations are valid and to assess their influence on a specific application. The design considerations for architectural precast concrete are not any more numerous or difficult than the ones associated with other materials. Optimum utilization of precast concrete will result from a thorough understanding of the applicable design considerations. Consider, for example, the interplay between the configuration of a precast concrete unit and its structural capacity, and between its shape and available finishes. Add to this the available options in reinforcement, including the possibility of prestressing the unit to offset tensile stresses caused by handling or service conditions, and the importance of understanding these design considerations becomes clear.

The architect, with or without prior experience with precast concrete, will benefit from a detailed study of the entire manual in order to obtain an understanding of interrelated design considerations. Subsequent to such a study, the manual will be a valuable reference for the future design of architectural precast concrete.

Structural precast concrete products comprise an important segment of the precast concrete market. These units are normally produced in standard shapes such as double or single tees, and channel, solid, or hollow slabs with many different finishes that are often

machine applied. Although many of the design considerations discussed in this manual apply to these products, additional design considerations may also govern. These design considerations are thoroughly covered in the companion *PCI Design Handbook—Precast and Prestressed Concrete*. Similarly, information concerning regional availability of products and product variation between individual plants is readily available from local producers. Thus, structural precast concrete products are not specifically discussed in this manual. This manual concentrates on the architectural precast concrete applications that are custom designed in shapes and finishes for each individual project.

The manual contains some recommendations with respect to job requirements and contract conditions relating to precast concrete. These procedural recommendations will help to minimize complications and facilitate communications during the bidding and construction stages.

The design considerations, together with the procedural recommendations, should be geared to local practices. The importance of coordinating the development of architectural precast concrete projects with local precasters cannot be overemphasized. The ultimate aim of this manual is to encourage this communication and forming of relationships.

1.2 APPLICATIONS OF ARCHITECTURAL PRECAST CONCRETE

Architectural precast concrete has been used for many decades in North America. Its full potential in terms of

Fig. 1.2.1 Interior of Baha'i House of Worship, Wilmette, Illinois; Architect: Louis Bourgeois.

Fig. 1.2.2 Jefferson County Government Center, Golden, Colorado; Architect: C.W. Fentress and J.H. Bradburn Associates.

economy, versatility, appearance, structural strength, quality, and performance continues to expand as witnessed by the new projects changing the skylines of many cities throughout the North American continent.

Even today, buildings with precast concrete cladding dating back to the 1920s and 1930s attest to the fine craftsmanship of those periods and the permanence of the material. A classic example is the Baha'i House of Worship, Wilmette, Illinois (frontispiece and Fig. 1.2.1), designed by Canadian architect Louis Bourgeois. This structure, started in 1920 with final completion in 1953, is one of the most beautiful and delicately detailed structures ever constructed in the United States. It is a nine-sided structure built with white architectural precast concrete panels with exposed quartz aggregate over a steel superstructure. Each side has the form of a circular arc, with a large doorway in the center. Pylons 45 ft (13.7 m) in height stand at the corners of the first story. Above the gallery, the clerestory and the dome are also nine-sided but with the ribs rising from midway of the sides of the first story. On the dome is inscribed the orbits of the stars and planets in a pattern of ovals, circles, and flowing curves. Symbols representing life, tendrils, flowers, leaves, and fruit are woven into the design. The interior (Fig. 1.2.1) is a lofty cylindrical room topped with a hemispherical dome of 75 ft (22.9 m) interior diameter and extending to a height of 135 ft (41.1 m) in the center. Wire glass is supported by a steel framework concealed within the intricately patterned precast concrete exterior and interior surface. These act as perforated screens through which light passes.

Today, architectural precast concrete demands equal craftsmanship in the design and tooling aspects of the manufacturing process. Production has progressed from reliance on individual craftsmanship to a well controlled and coordinated production line method with corresponding economic and physical improvements. These state-of-the-art manufacturing techniques do not sacrifice the plastic qualities of concrete, nor do they limit the freedom of three-dimensional design. In knowledgeable, sympathetic hands, these techniques can be adapted to fit specific performance and aesthetic requirements of the contemporary designer.

Treatment of texture and color can be rich, extracting the best qualities of the raw materials. Coarse aggregates are selected for their size, shape, and color. Fine aggregates and cement are selected according to the desired texture and color of the finished element. The mixing of aggregates and cement is similar to the artist's mixing of colors on a palette.

The photographs in this chapter afford a glimpse of the variety of expressions possible with precast concrete; bold yet simple to emphasize strength and durability; intricate as well as delicate to mirror elegance; and three-dimensional sculpturing to display individuality. Other photographs or drawings throughout the manual illustrate these varieties of expressions along with specific concepts and details.

Complex molds with 30 different radii were constructed to produce more than 4000 precast concrete components that form the shell for the structure in Fig. 1.2.2. Two colors of precast concrete were used—a tan

Fig. 1.2.3 IJL Financial Center, Charlotte, North Carolina; Architect: Smallwood, Reynolds, Stewart, Stewart & Associates, Inc.

and an earth-tone burnt orange. Both were selected for the compatibility in color and hue with the surrounding landscape and terrain.

The building in Fig. 1.2.3 features a unique profile, with a two-sided curved penthouse descending to a top floor curved only on one side, which is juxtaposed with the rotated square tower footprint below. The design creates the impression that a curving, modern structure is blending with a traditional rectangular one. Both architectural precast concrete panels and granite are used to clad the 30-story office building. The first three floors are clad with flame-finish granite anchored to precast concrete backing panels with horseshoe-shaped stainless steel pin anchors. The upper floors feature precast concrete panels that have been finely detailed and textured with sandblasting and the application of a retarder finish. This treatment provides the panels with a flamed, stone-like appearance that provides a seamless and virtually indiscernible shift from granite to concrete.

Fig. 1.2.4(a) Police Administration Building Philadelphia, Pennsylvania; Architect: Cubellis GBQC formerly Geddes Brecher Qualls Cunningham, Architects; Photos: Portland Cement Association.

Fig. 1.2.4(b) Loadbearing wall construction.

The Police Administration Building in Philadelphia made history in 1961 as one of the first major buildings to use the inherent structural characteristics of architectural precast concrete (Fig. 1.2.4[a] and [b]). The 5-ft-wide (1.5 m), 35-ft-high (10.7 m), three-story exterior panels carry two upper floors and the roof. The building is unusual in its plan configuration, consisting of two circles connected by a curving central section, demonstrating the adaptability of concrete to unusual floor plans. This structure was

Fig. 1.2.5 U.S. Department of Housing and Urban Development Headquarters, Washington, D.C.; Architect: Marcel Breuer and Herbert Beckhard Design Architects; Nolen-Swinburne & Associates, Associate Architects; Photo: ©Images are courtesy of the Marcel Breuer papers, 1920-1986, in the Archives of American Art, Smithsonian Institution.

an early model for the blending of multiple systems into one building. Precast concrete and post-tensioning were the relatively new techniques that were then successfully combined.

The headquarters building for the Department of Housing and Urban Development in Washington, D.C., completed in 1968, has loadbearing panels that house air-conditioning units below sloping sills and form vertical chases for mechanical services (Fig. 1.2.5). The windows are recessed in the deeply sculptured panels for solar control. The panels lend remarkable plasticity to the façade.

A building's exterior can make a strong impression on a visitor and enhance a company's image. Take the familiar landmark, the TransAmerica Building in San Francisco, California. Clad entirely in architectural precast concrete (Fig. 1.2.6), the building is 48 stories tall and is capped by a 212 ft (64.6 m) spire, for a total height of 853 ft (260 m). Floor-height double-window units, weighing 3.5 ton (3.2 t) each, make up half of the total precast pieces used, with two variations for all corner units. It is just one of thousands of buildings with a unique, distinctive façade that has been created with architectural precast concrete.

The exterior precast concrete portion of the building in Fig. 1.2.7(a) is over 900 ft (274.3 m) long. The 158 architectural precast concrete panels are designed as an elliptical curve, featuring a discontinuous

Fig. 1.2.6 TransAmerica Tower San Francisco, California; Architect: Johnson Fain and Pereira Associates (formerly William L. Pereira & Associates); Photo: Wayne Thom photographer.

Fig. 1.2.7(a) & (b) Center of Science & Industry, Columbus, Ohio; Architect: Arata Isozaki & Associates, Design Architects: NBBJ Architects Inc.; and Moody/Nolan, Architects of Record.

Fig. 1.2.8(a) & (b)
Merrill Lynch Facility
Englewood, Colorado;
Architect: Thompson, Ventulett Stainback & Associates; Photos: Brian Gassel/TVS.

clothoid curve, which is a segment of a spiral that curves in two directions. Each quadrant of panels making up the façade was placed along segments of six curves to produce the elliptical shape. The wall panels lean nearly 8 ft (2.4 m) into the building along segments of two other circular curves (Fig. 1.2.7[b]). The architect desired a smooth exterior surface. The result was a 20-in. (500 mm) deep wall panel comprised of a 5-in. (125 mm) thick flange creating the exterior shell and appearance. Each panel also contains two vertical interior ribs to serve as panel stiffners. The 62-ft-tall (18.9 m) curved panels not only clad the building but also act as loadbearing members to support the steel roof framing members and metal deck.

Two similar loadbearing total precast concrete office buildings comprise a corporate campus. With their long horizontal lines, strong vertical columns, and window frame details, the buildings are reminiscent of the Prairie School style of architecture (Fig. 1.2.8[a]). The rectangular forms maximize space planning efficiency and accommodate the loadbearing precast concrete structural system. Detailed with horizontal reveals, the large, 30 ft wide x 40 ft high (9.1 x 12.2 m) red portals replicate native Colorado red sandstone (Fig. 1.2.8[b]). Buff-colored precast concrete tracery accents window openings and forms pilasters at the third level, rising into columns supporting the roof with its deep trellised sunshade. The buff precast concrete beneath the windows features two finishes: a ribbed central section between two acid-etched raised edges. The total precast concrete system also produces a single source of responsibility for the structural system. This approach lowered risk, streamlined communication, and made on-site coordination easier for the design team, providing a significant value.

With its three parallel horizontally and vertically post-tensioned curving walls constructed from three hundred forty-six 30-in.-thick (760 mm) off-white panels of precast concrete that rise 57 to 88 ft (17.4 to 26.8 m) above the nave, the church in Fig. 1.2.9(a) is a dramatic and defining presence amid the suburb's large, nondescript apartment buildings. The almost toppling walls cantilever from the ground and all three walls are perfect segments of circles with the same radius. The shells delineate three distinct spaces—the main sanctuary, the weekday chapel, and the baptistery, each with its own entrance. The secular community center is a concrete structure with a rigidly rectilinear form (Fig. 1.2.9[b]). The concrete is made with a white cement containing photocatalytic particles of titanium dioxide that oxidize organic and inorganic pollutants, so that the brightness

Fig. 1.2.9(a) & (b)
Jubilee Church (Dives in Misericordia); Rome, Italy;
Architect: Richard Meier & Partners, Architects LLP; Italcementi,
Technical Sponsor; Photos: Gabriele Basilico.

Fig. 1.2.10 Bannockburn Centre, Bannockburn, Illinois; Architect: Wright Architects, Ltd.; Photos: Wright Heerema Architects.

and color will not degrade over time—resulting in self-cleaning concrete. In addition, the thermal mass of the exposed interior concrete walls keep heat inside in the winter and outside in the summer, reducing the energy loads on the building system.

Various colors and textures of architectural precast concrete are used to articulate the façade of the office building in Fig. 1.2.10. A rusticated stone-faced first course is topped by exposed red granite aggregate concrete forming the base of the building. The recessed half-round columns, spandrels, and cornices are finished in an acid-etched buff color simulating the appearance of limestone. The repetition of precast concrete units afforded the opportunity to make them more intricate and created an elegant yet economical skin.

The combination of color, shape, and texture showcases the ability of architectural precast concrete in Fig. 1.2.11(a) to meet the designer's imaginative demands. A large passageway frames the main entrance, involving architectural precast concrete that forms the columns and fascia beams. The project consists of four main parts, namely a detention facility, the courthouse, an addition to an existing police station, and the rotunda. Sixteen thin precast concrete shell units form the rotunda's 72 ft (22 m) diameter dome, bearing on a

Fig. 1.2.11(a) Boldly detailed loadbearing window-wall units.

Fig. 1.2.11(b) Aurora Municipal Justice Center, Aurora, Colorado; Architect: Skidmore, Owings & Merrill.

cast-in-place tension ring and a precast concrete compression ring. The rotunda is believed to be the first precast concrete dome structure built in the United States. The majority of the wall panels are loadbearing window-wall units, which are two stories high and weigh 20,000 lb (9.1 t) each. They are boldly detailed with bullnoses, cornices, and friezes, with a cream-colored appearance. Similarly, beveled reveals up to 10 in. (250 mm) wide vertically score the centerline of each panel to emphasize the play of sunlight and shadow on the building's monumental façade (Fig. 1.2.11[b]).

The hotel in Fig. 1.2.12 was designed for a prominent downtown corner site. It is flanked on one side by boldly massed brick-faced precast concrete panels on the Museum of Modern Art and has, as a nearby neighbor, an art-deco designed, 1920s-style high-rise building. To complement these prominent neighbors, the architects generated a podium and tower design with boldly massed pure forms articulated to reflect a latent classical appearance. The tower was given deep V-shaped scoring to emphasize its verticality. The 6-in.-thick (150 mm) precast concrete panels (finished in white concrete with black gray and buff aggregate) were formed to look like blocks of granite used in many of San Francisco's civic structures. The appearance of stone detailing was enhanced by treating the surface of the panels with two depths of sandblasting. A medium sandblasting of the typical surface created the look of a thermal finish, while a light sandblasting of the back face of the reveals (3 in. wide x 2 in. deep [75 x 50 mm]) at the lower levels was used to give the impression of oversized mortar joints.

The art museum in Fig. 1.2.13 has become a landmark symbol. The patterned façade has 1-in.-thick (25 mm)

Fig. 1.2.12
W Hotel, San Francisco, California; Architect: Hornberger + Worstell; Photo: Hornberger + Worstell.

Fig. 1.2.13 Museum of Modern Art San Francisco, California; Architect: Mario Botta, Design Architect; Hellmuth, Obata & Kassabaum, P.C., Architect of Record; Photo: San Francisco Museum of Modern Art/HOK/Perretti & Park Pictures.

Fig. 1.2.14 University of Illinois Molecular Biology Research Building, Chicago, Illinois; Architect: Goettsch Partners formerly Lohan Associates; Photo: Jon Miller ©Hedrich Blessing.

brick on 9-in.-thick (225 mm) precast concrete panels. Most panels measure 10 x 28.5 ft (3.0 x 8.7 m) and contain between 1500 to 2300 bricks per panel.

The design challenge for the medical research building in Fig. 1.2.14 was based on the area's extremely eclectic architectural styles. Most of the buildings date back to the 1920s and 1930s and feature a variety of brick and precast concrete design motifs. There is no dominant image to play off. The architects' goal was to create something that would be compatible with this diverse group of buildings yet project a distinctive campus image to visitors. The architects created a lot of design interest in the articulation of the façade. In addition, by adding varying colors and finishes to the panels based on their location, the designers were able to pick up themes in nearby buildings without detracting from the overall look. The result is that each façade is compatible with its surroundings and looks like it belongs in the area. The base, a sandblasted granite aggregate finish, invites visual interest for pedestrians. The mid-levels feature an acid-etched granite aggregate that provides subtle, rich, red tones to integrate with the masonry on existing buildings. The top features an acid-etched white sand with a mild pink cast that is used primarily on laboratory sections, conveying a crisp look. Amber-tinted windows reinforce the color scheme.

The design challenge in Fig. 1.2.15 was to integrate the multi-use complex into the small-scale principal retail district at the block's edges and the adjacent art deco building. The precast concrete and detailing at the corner entrance speak to the tradition of the grand era of late 19th-century department stores. From the decorative urns at the roof, to the incised lettering, to the terra cotta colored brackets and the strong cornices at the top of the second floor, this fineness of detail was economically viable with precast concrete.

The project in Fig. 1.2.16(a) includes a 3-story shopping mall and an 11-story office building in the heart of a major business district. The use of architectural precast concrete panels to clad the buildings creates a distinctive look, resembling rough-hewn stones. The panels also comprise the creative geometric shapes that make the complex stand out. The stone texture of the panels was achieved by using rubber form liners, taken from natural rocks in a basalt rock quarry (Fig. 1.2.16[b]). Detailed engineering and intricate forms were needed to produce panels with deep reveals in false joints and interlocking lateral ends that eliminated any visible vertical

Fig. 1.2.15
Saks Majestic Square Complex
Charleston, South Carolina;
Architect: LS3P Associates, Ltd.;
Photo: LS3P Associates, Ltd.

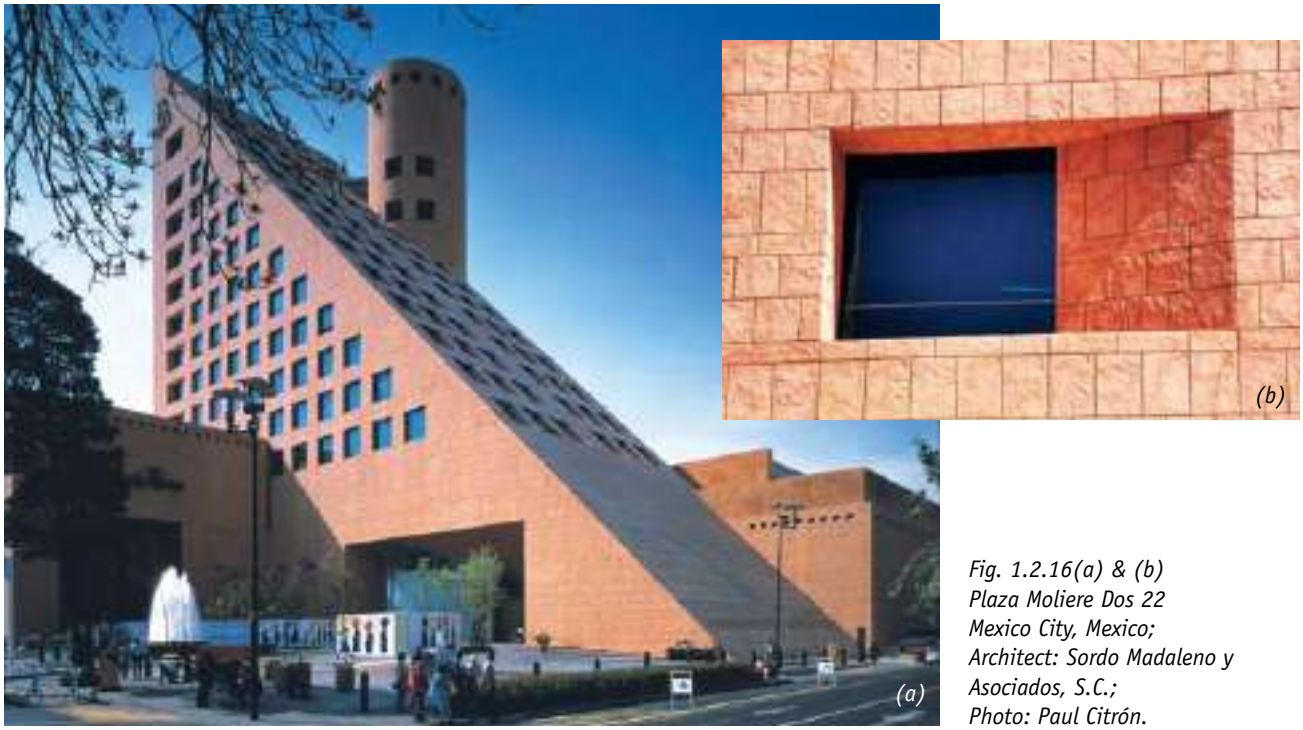

Fig. 1.2.16(a) & (b)
Plaza Moliere Dos 22
Mexico City, Mexico;
Architect: Sordo Madaleno y Asociados, S.C.;
Photo: Paul Citrón.

Fig. 1.2.17(a) & (b)
University Center of Chicago, Chicago, Illinois; Architect: Antunovich Associates and VOA Associates, Inc., Associate Architects; Photos: Antunovich Associates.

Fig. 1.2.18 University of Iowa, Pappajohn Business Administration Building, Iowa City, Iowa; Architect: Architecture Resources Cambridge, Inc., Design Architect; Neumann Monson, P.C., Architect of Record; Photo: Nick Wheeler © Frances Loeb Library, Harvard Design School.

joints. The horizontal, vertical, and slanted corner panels were cast in one piece, producing a true "corner stone" appearance. The building is located within a high-risk earthquake zone. The connections used a 1.25 in. (32 mm) slot as a provision for differential movement between any two adjacent stories and this was accomplished with 8-in.-long (200 mm) galvanized steel rods that attached the precast concrete panels' top inserts to embedded plates in the structure.

About 1400 architectural precast concrete panels were used to clad the 18-story, multi-university dormitory project in Fig. 1.2.17(a). The design features rounded corners and a detailed cornice, adding interest to the massive structure. The panels feature an acid-etched finish on the upper levels and a retarded finish on the first two floors, creating an appearance along the street that fits with its neighbors (Fig. 1.2.17[b]). The extensive use of the precast concrete allowed the exterior envelope to be constructed during winter and inclement weather.

The façades of the four-story, block-long university administration building in Fig. 1.2.18 are articulated by a harmonious rhythm of pilasters and windows, symmetry, and classical detail. The scale and feeling of the exterior reflect the grace and serene neo-classicism of nearby early 19th-century structures. The architectural precast concrete components for this project were manufactured with a blend of white and gray cement, a small amount of buff pigment, a light-colored limestone aggregate, and a natural buff sand. All of the precast concrete panels were lightly acid-washed. The precast concrete material's extraordinary flexibility allowed considerable design freedom in the detailing of the elements and the development of an aesthetic that is sympathetic to the neighboring buildings. The precast concrete creates a stepped, animated façade rather than an unrelenting flat surface. Many of the precast concrete components required multiple casting sequences due to the deep overhangs and multiple returns. The precast concrete has an especially strong expression in the rusticated base of the building, which conveys the strength, solidity, and mass of the structure.

For 85 years Oklahoma's Capitol building remained unfinished, its dome never built. The architect designed

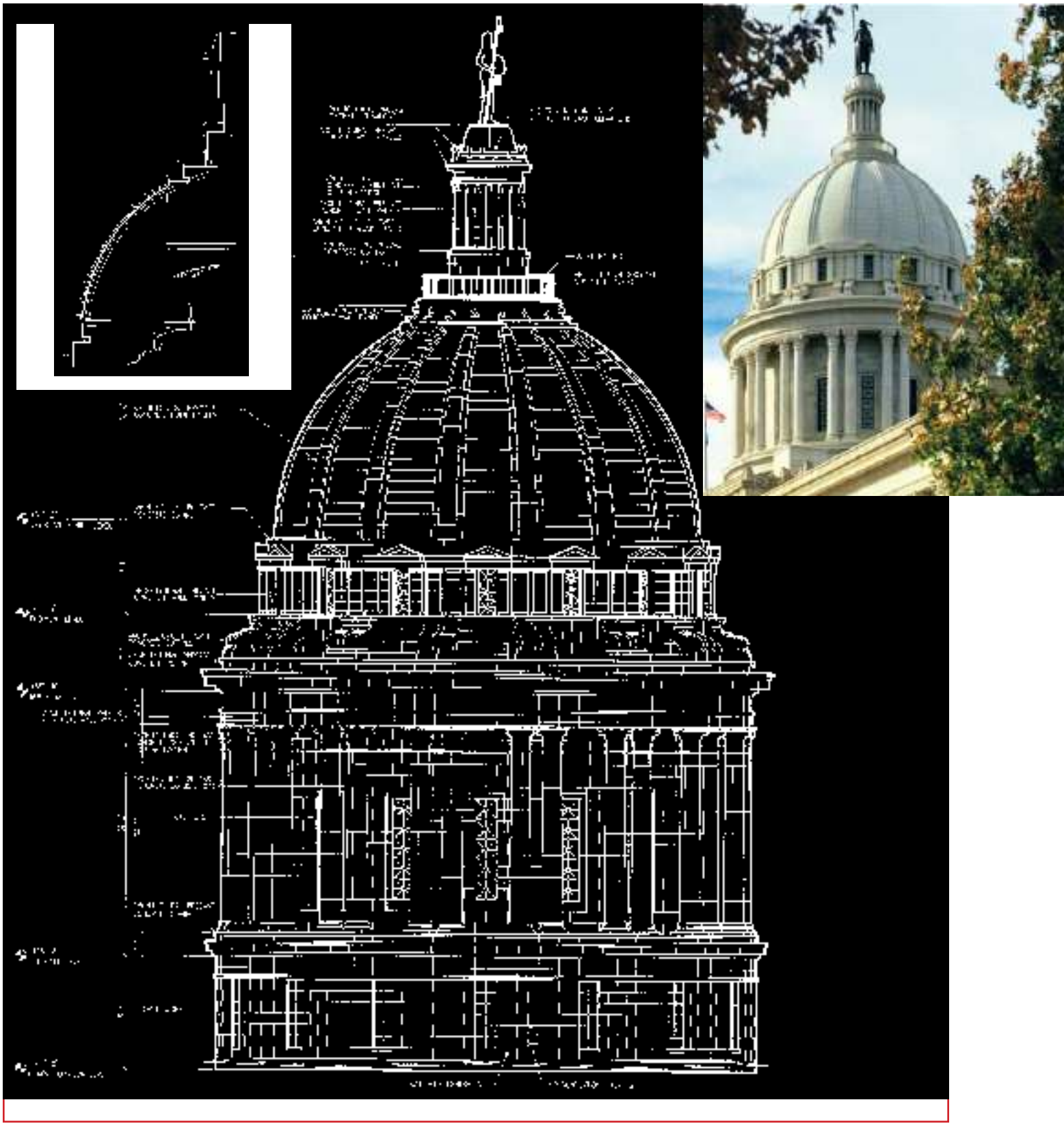

Fig. 1.2.19 Oklahoma State Capitol Dome, Oklahoma City, Oklahoma; Architect: Frankfurt-Short-Bruza Associates, P.C.; Photo: Frankfurt-Short-Bruza Associates.

Fig. 1.2.20(a) & (b)
840 N. Lake Shore Drive, Chicago, Illinois;
Architect: Lucien Lagrange Architects;
Photos: Steinkamp Photography.

both an external and inner dome based on the original intent of the 1914 plans. The new outer dome features architectural precast concrete and cast stone. The dome is 80 ft (24.4 m) in diameter and rises 140 ft (42.7 m) above the existing roof (Fig. 1.2.19[a] and [b]). The greatest challenge for the precast concrete was to emulate the ornate detailing of the Capitol, which included Corinthian columns and capitals, Greek pediments, ornate scrolled brackets, and highly detailed cupola. To address concerns regarding the required maintenance of the sealed precast concrete panel joints, precast concrete ribs were placed over the vertical joints of the dome panels. As an added precaution, all inside faces of the precast concrete panels are accessible to help prevent damage to the inner dome from undetectable leaks.

In a city renowned for its architectural heritage, the distinctive 26-story condominium tower in Fig. 1.2.20(a), rising from a prominent lakefront site, is a welcome addition to the skyline. Architectural precast concrete panels clad the tower's façade and help the project integrate seamlessly into the neighborhood through the articulation and warm buff color of the material. The goal was to achieve the appearance of an all-limestone-clad building, and this was enhanced by the use of natural stone at the base, with precast concrete panels used above the second floor. Typical panels on the front elevation are 23 ft 3 in. long x 10 ft 8 in. high (7.10 x 3.28 m). Panels are 7 in. (175 mm) thick with 11 in. (275 mm) returns at the windows (Fig. 1.2.20[b]). The cladding was designed for a 127 mile per hour (203 km/hr) lateral wind load. The building's deep-punched windows, jointing, and cornice line were achieved with precast concrete's flexibility and low cost. The designers also took advantage of precast concrete's fluidity in producing an elegantly curved rotunda transition at the building's most prominent corner. The use of precast concrete panels minimized both construction time and the staging area required for installation, a key factor in an urban environment.

The precaster scheduled timely deliveries that could be unloaded and transported via tower crane to their connection location without stockpiling any pieces at the site. The use of precast concrete also allowed the window units to be anchored easily into the precast concrete, eliminating the need for a metal strongback system that would have been required to attach them to stone.

The corporate center in Fig. 1.2.21 is a focal point for a new development area. It is integrated into the landscape with the use of architectural precast concrete panels in an innovative form and expression. The pyramid-shaped building holds exhibition areas, showrooms, and a multiple-use auditorium. The cube-shaped building is eight stories high, topped with a penthouse, and is used as corporate office space. Waterfalls cascade onto the floor inside the circular openings of the four walls, then flow into reflecting pools in the main plaza. To match the surrounding landscape and the design concept of natural stone, a combination of white and gray crushed marble coarse aggregate and sand with white and gray cement was crucial in giving the buildings the right color blend. The architect sought texture and brightness for the desired reflection of light by using a medium-deep surface texture achieved with pneumatic chisel tools. The marble chips shone when the skin was broken off the precast concrete panels.

Fig. 1.2.22 The Bushnell Center for the Performing Arts Hartford, Connecticut; Architect: Wilson Butler Lodge Inc.; Photo: Robert Benson Photography.

Fig. 1.2.21 Calakmul Corporate Center, Mexico, D.F., Mexico; Architect: Agustin Hernández Navarro; Photo: Agustin Hernández.

The architect also requested that slight color variation be randomly added to the panels in order to attain the natural pyramid stone effect.

Figure 1.2.22 is a performing arts center used for the presentation of Broadway shows, ballet, opera, symphony concerts, and productions by regional arts groups as well as cultural arts–related educational programs. The project, a 90,000 ft^2 (8370 m^2) addition to an existing historic theater, owes much of its aesthetic success to the use of contemporary precast concrete elements that complement the historic Georgian limestone façade of the 1929 building. The design of the entry pavilion centered on the use of carefully detailed and molded precast concrete columns and spandrels. The precast concrete panels allowed the architects to create a light, open design with spans impossible to create in stone.

With no courtroom construction in the area for more than 40 years, new courts were needed to meet the justice requirements of a large urban area with an architectural design that reflects the look, character, fundamental strength of the institution, environmental characteristics of the site, and the progressive judicial body. A 295,000 ft^2 (27,406 m^2), 10-story courthouse was conceived with a rooftop helipad on an irregular site (Fig. 1.2.23). The courthouse contains eight courtrooms, with space for six future courtrooms, and judicial support departments. The court building was massed with a blend of design elements by using curved precast concrete panels that form the judicial court block opposed by a contemporary insulated glass curtain wall for the administrative and public areas. The precast concrete panels with sandblast finishes were selected for their substantial, low-maintenance, and timeless appearance, along with the security characteristics. The main public entrance is enhanced by a two-story atrium. The building is secure through vehicle barriers provided by stepped hardscape.

A highly visible, sloping site directly adjacent to a small lake was the impetus for creating a classical style office building that would use the water as a giant reflecting pool (Fig. 1.2.24). A high level of detail was achieved through the use of sharply articulated panels that create strong shadow effects. Two precast concrete finishes were chosen. Lightly sandblasted surfaces give the appearance of a buff-color limestone when viewed from a distance. Heavy sandblasted portions of

Fig. 1.2.23
Los Angeles County Municipal Court
Los Angeles, California;
Architect: Mosakowski Lindsey Associates;
Photo: Benny Chan Fotoworks.

Fig. 1.2.24 Four Lakepointe
Charlotte, North Carolina; Architect: Urban Design Group Inc.; Photo: Urban Design Group.

Fig. 1.2.25 Logistical Systems Operations Center, Wright-Patterson Air Force Base, Dayton, Ohio; Architect: KZF Inc.; Photo: KZF Design Inc.

the panels simulate thermal finish granite to complement polished, pink granite insets. Granite and marble insets are separated from the precast concrete finishes by a $^3/_4$ in. (19 mm) reveal at all locations. This also provided a way to disguise panel joints and create more shadows and surface detail. False joints are added at mid-spandrel and mid-column heights to give the illusion of smaller pieces.

The façade of the building in Fig. 1.2.25 is constructed of lightly sandblasted architectural precast concrete panels with a design that is a direct synthesis of the simplified art deco style of the adjacent 1940s and 1960s buildings clad in precast concrete. Precast concrete planters with low ground cover serve as crash-resistant vehicle barriers for the windowless, single-story, data processing area.

Fig. 1.2.26
One Balmoral Avenue
Toronto, Ontario, Canada;
Architect: Rafael + Bigauskas Architects;
Photo: Rafael + Bigauskas Architects.

Fig. 1.2.27(a) & (b)
Richard E. Lindner Athletics Center, University of Cincinnati, Ohio; Architect: Bernard Tschumi Architects, Design Architect; Glaserworks, Architect of Record; Photos: Bernard Tschumi Architects.

The nine-story, mid-rise, U-shaped condominium project accommodates a total of 137 units (Fig. 1.2.26). The building terraces downward to a height of three stories, thus addressing the low-rise residential enclave behind. The nine-story façade is broken down by a one-story rhythmic sequence of repeated cladded columns, which are capped by a continuous, heavily articulated cornice band at the second floor. The columns connect to this cornice band, emphasizing its support of the façade above. The elevation above the cornice band is broken up by the integration of punched windows and curved French balconies that are framed through the use of detailed precast concrete lintels and sills.

The boomerang-shaped, 236,000 ft^2 (21,924 m^2) athletic center is not only a fantastic work of art, but also an amazing logistical accomplishment made possible by architectural precast concrete (Fig. 1.2.27[a]). The diagrid exoskeleton was conceived as a stiff structural skin that could minimize the number of exterior columns while efficiently supporting clear spans over an existing arena, mechanical room, service tunnel, and loading dock. What resulted is an artfully conceived and carefully executed integration of form and structure: an extremely complex steel truss frame clad with 567 compound-curved, light gray, light sandblasted precast concrete panels that actually wrap the individual steel structural elements to provide deep window recesses echoing the steel superstructure (Fig. 1.2.27 [b]). The only straight lines in the precast concrete panels are in the vertical plane or along the sides of the windows. In the horizontal plane, there are six convex, two concave, and eight compound transition curves cast using eight custom-constructed, all-steel forms—including a one-of-a-kind adjustable form—that provided both consistency and production efficiencies. In addition, the structure appears perched atop several V-shaped "pilotis" column covers that feature a helical warped surface and vary in width throughout their height. The helical steel frame and precast concrete panels with recessed triangular window returns that penetrate into and through the steel frame could only be designed using data-laden 3-D software models and would have been considered an almost unworkable design just a few short years ago.

The dramatic, three-building library clad in architectural precast concrete is a functional work of art (Fig.

Fig. 1.2.28(a), (b) & (c)
Salt Lake City Public Library, Salt Lake City, Utah;
Architect: Moshe Safdie and Associates Inc., Design Architect;
VCBO Architecture, Architect of Record; Photos: Timothy Hursley.

1.2.28[a]). The largest and most demanding portion involved the 400-ft-long (120 m) sloping crescent building, which used precast concrete to create the appearance of a flowing, curved, leaning, and warping structure. The crescent building climbs to a height of more than 90 ft (27 m) and at the midpoint of the inclined arc, the inclination is 15 degrees from vertical (Fig. 1.2.28[b]). It moves to embrace the main triangular library struc-

Fig. 1.2.29 Thomson Consumer Electronics Headquarters, Indianapolis, Indiana;
Architect: Boka Powell formerly Haldeman, Powell + Partners Consortium for Architecture Inc.; Michael Graves, Architect, Associate Architect; Photo: BOKA Powell.

ture. Flowing through the skylit space created by the triangle and crescent buildings, the airy urban room offers easy access to public amenities (Fig. 1.2.28[c]). The six-story rectangular structure contains the administrative offices. All three buildings are enclosed with, or incorporate the use of, acid-etched architectural precast concrete panels.

The administrative building in Fig. 1.2.29 is organized as two office wings flanking a cubic central pavilion housing a skylit cylindrical atrium and grand stair. The designer modified the large scale of the building's long façades through the use of a giant pattern. Integrally colored green, gray, and terra cotta precast concrete panels assembled in a checkerboard pattern recall the orderly landscape of the surrounding farm fields. The earth-colored precast concrete central pavilion provides a rich background against which the bright yellow–glazed brick portico reflects the brilliant light. The choice of concrete panels was cost effective in addition to providing a durable, low-maintenance material. Two other benefits of precast concrete that helped the construction schedule were its ability to be installed in all types of weather and the ease and speed with which a precast concrete clad building can be enclosed.

Fig. 1.2.30
Northwestern Memorial Hospital, Chicago, Illinois;
Architect: Ellerbe Becket Inc.; Hellmuth, Obata & Kassabaum, P.C.; and VOA Associates Inc., Architects of Record;
Photo: Scott McDonald ©Hedrich Blessing.

Architectural precast concrete panels, articulated in an ashlar pattern, provide the design of the medical facility in Fig. 1.2.30 with the solidity and strength envisioned by the client. Precast concrete panels provided an ideal solution to obtaining the warm buff coloration produced from the process of chat-sawing limestone. Precast concrete gave the designers control over color and texture and provided flexibility in the sculptural expression. Half inch by half inch (13 mm x 13 mm) deep reveals provided the necessary relief to create the ashlar stone pattern used to reduce the scale of the large panels and simulate the texture of a natural stone surface. A delicate, nearly smooth finish was produced by using a light sandblast that expressed almost no coarse aggregate. A strong pilaster expression, enhancing the vertical planes of the building, is also achieved through the use of the precast concrete.

Fig. 1.2.31
Navy League Building, Arlington, Virginia; Architect: Page Southerland Page, L.L.P.; Photo: Doug Flory.

Architectural precast concrete was chosen for the building cladding material in Fig. 1.2.31 for its inherent design flexibility and sense of dignity and permanence. It offered the ability to create a rich architectural vocabulary of façade elements establishing the appropriate scale and image sought. Due to the extreme prominence of this facility within a very active, energized community, it was necessary to give the seven-story office building a great deal of architectural detail and character. The design team was admonished to avoid "flat" façades; hence, the final design incorporates a significant level of three-dimensionality with heavy vertical projections. Three mixture designs were used with two finishes—white precast concrete with embedded granite panels and a light acid wash finish at the lower levels, and two buff-colored mixtures with medium acid washes above. Four spandrel panels have molded lettering showing the building name and address. The building was designed to achieve a Silver Rating from the U.S. Green Building Council's LEED Rating System.

Architectural precast concrete was selected to achieve the classical look that the architect desired for the main library in Fig. 1.2.32(a), which was a unique finish to

Fig. 1.2.32(a) & (b)
Jacksonville Public Library
Jacksonville, Florida;
Architects: Robert A.M. Stern Architects; and
Rolland DelValle and Bradley;
Photos: Brian Griffis.

approximate the surface of coquina stone (appearance is similar to travertine), a coarse-textured whitish limestone formed of broken shells and corals cemented together. In order to acquire this look, baking soda was sprinkled in the bottom of the mold before the panel was cast. Each rusticated panel has its own personality with a wide variation in texture, veinage, and color, but an average depth of surface voids was set to the architect's requirements (Fig. 1.2.32[b]). The resulting appearance gives the building uniqueness.

Improvements in fabricating processes allow architectural precast concrete to be created in almost any color, form, or texture—whatever is most aesthetically pleasing. In addition, concrete's moldability offers the freedom to sculpt the structure's façade in very imaginative ways. This ability to achieve totally customized elements makes precast concrete different from any other exterior cladding material. Precast concrete also can be faced creatively with a wide variety of other cladding materials. Architects are incorporating the pleasing appearances of traditional cladding materials such as dimensional stone, brick, tile, and even terra cotta with the strength, versatility, and economy of precast concrete.

Fig. 1.3.1
Purdue University Water Sculpture, West Lafayette, Indiana; Robert Youngman, Sculptor; Photo: Purdue University.

1.3 MISCELLANEOUS USES OF PRECAST CONCRETE

In addition to functioning as exterior and interior wall units, architectural precast concrete finds expression in a wide variety of aesthetic and functional uses, including:

- Art and sculpture
- Columns, bollards, lighting standards, and fountains
- Planters, curbs, and paving slabs
- Towers
- Balconies
- Sound barriers and retaining walls
- Screens, fences, and handrails
- Street furniture and obelisks
- Ornamental work
- Signage

Artists have found precast concrete well suited for expressions of boldness and strength in a variety of shapes, forms, and textures, as illustrated in Fig. 1.3.1.

The site design of a hospital includes three intaglio art panels totaling 65 ft (19.8 m) in length (Fig. 1.3.2). Set in a pebble garden sitting at ground level, the panels frame the entry plaza and provide a background for the tide pool garden located behind the panel. A prominent artist from California was commissioned for the project and spent a week in the precaster's plant

Fig. 1.3.2
Hoag Hospital Sue and Bill Gross Pavilion
Newport Beach, California; Architect: TAYLOR
Tom Van Sant, Sculptor; Photo: Michael McLane and Courtesy of TAYLOR.

Fig. 1.3.3(a), (b) & (c)
Metronome, One Union Square South, New York, New York; Architect: Fredenburgh Wegierska-Mutin Architects; Kristin Jones and Andrew Ginzel, Art Wall Designers; Photos: David Sunberg/ESTO.

placing custom-designed foam impressions in the mold to create the art. The foam was sandblasted away to reveal a stunning California coastal shoreline–inspired artwork within the sand-colored panels. The panels depict shorebirds along the water's edge, which can be seen from the site's spectacular coastal bluff location that overlooks the Pacific Ocean.

Fig. 1.3.4(a) & (b)
Kohl Center, University of Wisconsin, Nichols-Johnson Pavilion
Madison, Wisconsin;
Architect: Hellmuth, Obata & Kassabaum, P.C. and
Heinlein and Schrock (joint venture); Photos: Steve Brock.

The art wall sculpture serves as the main façade of a 27-story, mixed-use residential-retail building (Fig. 1.3.3[a]). The art wall is 50 ft (15.2 m) wide by 100 ft (30.5 m) high with 36 concentric rings, with wave spacing varying from 15 to 36 in. (380 to 910 mm), and trough depths from 14 to 9 in. (355 to 225 mm). The molds were handmade from full-sized, 3-D computer-generated patterns to ensure compliance with the exacting requirements (Fig. 1.3.3[b]). Over 50,000 bricks in 8 different shapes were laid concentrically in 29 unique panels weighing from 8 to 22 tons (7.2 to 20 t). Precast concrete panels proved to be the best candidate by far for the design of the undulating pattern of waves and rippling fluidity (Fig. 1.3.3[c]). Identical bricks to those used in the art wall sculpture were used for the rest of the building. The intent was to give the appearance of the building being in motion.

The images of basketball players were incised into the panel surface by placing a wooden pattern in the mold (Fig. 1.3.4[a]). The master mold concept was used; the bulkheads and side rails were moved to give the appearance of the players coming out of the ground (Fig. 1.3.4[b]). The outer surface was sandblasted and the incised surface was left with a smooth as-cast finish.

Early 20th-century neoclassical commercial buildings and mass-produced cast iron office buildings inspired the design of the office building in Fig. 1.3.5. This

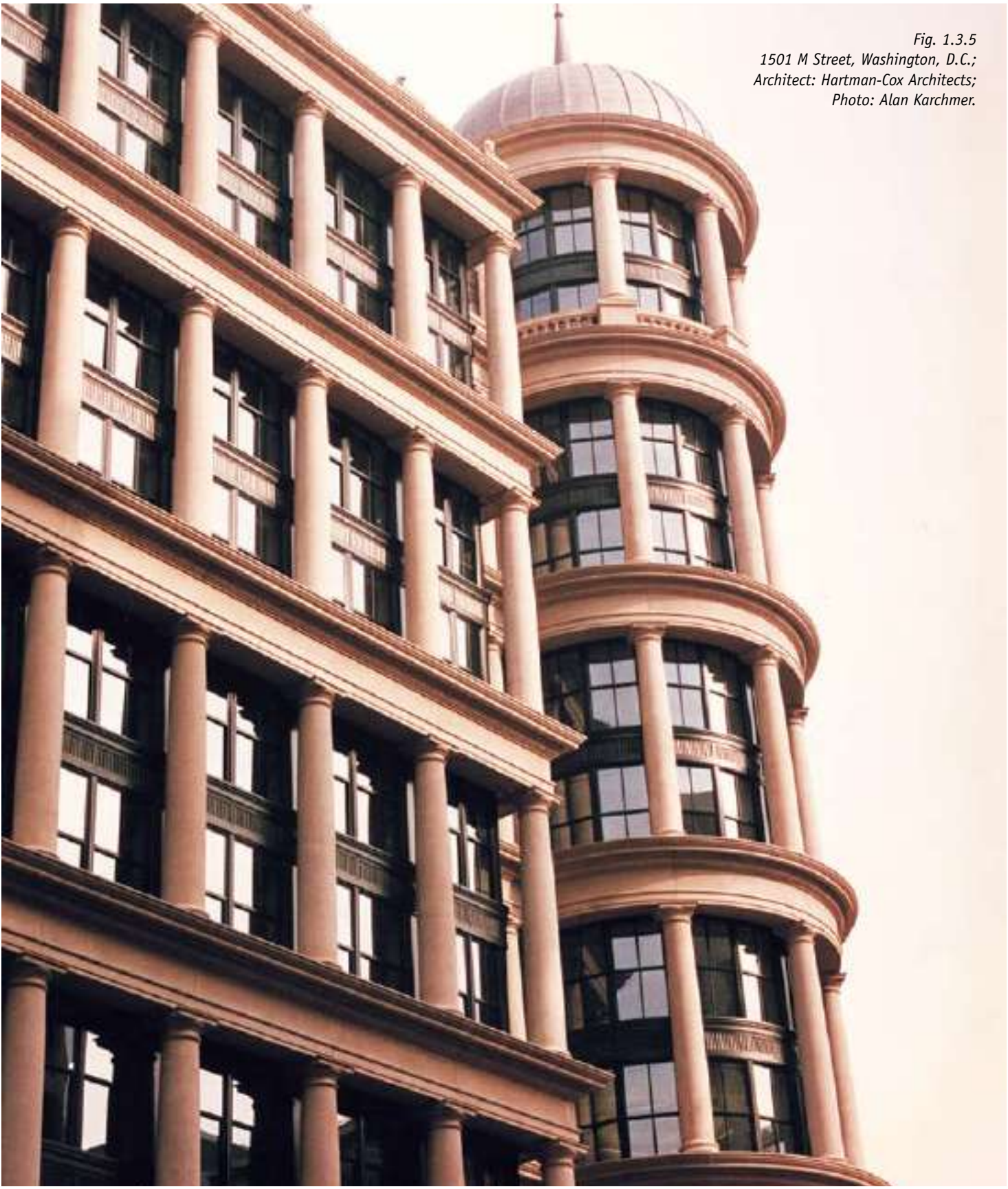

Fig. 1.3.5
1501 M Street, Washington, D.C.;
Architect: Hartman-Cox Architects;
Photo: Alan Karchmer.

Fig. 1.3.6
Orlando International Air Traffic Control Tower, Orlando, Florida; Architect: URS Corporation (Radian International); Photo: Hensel Phelps Construction Co.

building's exterior consists of two layers: a freestanding screen of 175 two-story-high Doric columns and cornices placed in front of a finely detailed, painted metal curtain wall. The acid-washed architectural precast concrete column wall is self-supporting and is tied back to the building's concrete structure with lateral ties.

The aesthetic and functional uses of precast concrete have greatly expanded with the increased development of pedestrian malls and plazas. Precast concrete artwork and functional sculpture, lighting standards, bollards, signage, and fountains are frequently seen in these areas. Planters and street furniture are another application of precast concrete that has gained importance with the proliferation of malls and plazas. Street furniture can benefit from the clean lines and variety of textures possible with precast concrete.

The design development of air traffic control towers continues to evolve as taller facilities are required to view the airport surfaces of the nation's larger airports. Figure 1.3.6 is one of the tallest towers in the United States at 310 ft (94.5 m) from cab floor to the first level. The precast concrete panels of the shaft are joined vertically with grouted splice sleeves located on each face of the panels. All panels were shimmed and grouted at the horizontal panel-to-panel joint. Panel-to-panel horizontal connections were also accomplished through the use of mechanical splice sleeves. The entire exterior of the tower (and both support buildings) were stained with a two-color system to give the tower its signature identity.

The structure in Fig. 1.3.7 serves as both a church bell steeple and a cellular communications tower. Because of the aesthetic requirements of the church, it was

Fig. 1.3.7
All Saints Catholic Church Bell Steeple
Dunwoody, Georgia;
Architect: Slater-Paull & Associates Inc.;
Photo: Slater-Paull & Associates Inc.

Fig. 1.3.8
Millennium Carillon, Naperville, Illinois; Architect: Charles Vincent George Design Group Inc.; Photo: Charles Vincent George Design Group Inc.

important to hide the structure's dual function. This concern became the prime motivation for choosing precast concrete. All transmission cables and lightning protection grounding systems are concealed inside of PVC conduit, which is cast into the steeple legs. The 40 ft (12.2 m) radius curve defining the precast concrete legs gives the steeple a dramatic and monumental appearance. The three-sided arched members that connect the steeple legs together are cast as one unit. Each of these three legs consists of five precast concrete members with a base spread of 65 ft (19.8 m). Two horizontal pieces and two arched segments are placed at intermediate heights, for a total height of 129 ft (39.3 m).

Some major advantages of using precast concrete for the bell tower in Fig. 1.3.8 were ease of construction of the complex structural design and availability of complex shapes and finish selection. Another major advantage is that the precast concrete walls carry the weight of the tower down into the concrete foundation, which rests directly on bedrock, making it possible to have a 160 ft (48.8 m) freestanding carillon tower. The structural frame is made up of three structural elements working simultaneously in conjunction with one another. The structural steel frame, eight large steel compression rings, and post-tensioned precast concrete panels are each tied to one another in alternating connection sequences.

The two most dramatic features of the garden crypt complex are the 50-ft-tall (15.2 m) precast concrete entrance tower, with its striking terra cotta artwork (Fig. 1.3.9[a]), and the 75-ft-long (22.9 m) black granite fountain which serves as a central axis through the building and delivers the sound of falling water throughout the entire complex (Fig. 1.3.9[b]). The tower consists of 16 precast concrete pieces, including concave and convex radius pieces and gable-roofed, pediment-shaped pieces. The project also includes thirty-four 1 ft 8 in. (0.5 m) diameter cylindrical columns with curved spandrels in the central courtyard. The finishes of the architectural precast concrete are a medium sandblast and acid-etched finish.

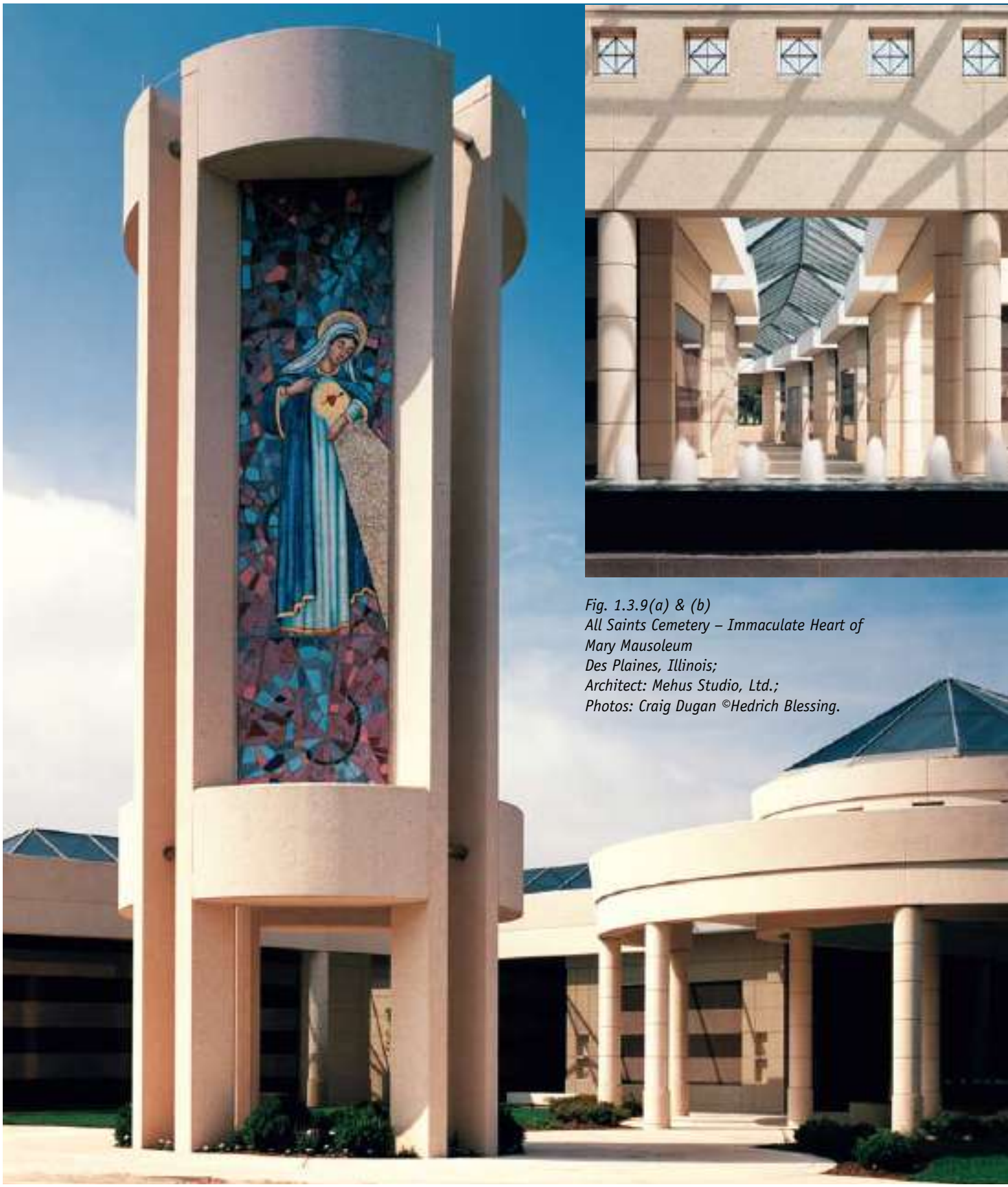

Fig. 1.3.9(a) & (b)
All Saints Cemetery – Immaculate Heart of Mary Mausoleum
Des Plaines, Illinois;
Architect: Mehus Studio, Ltd.;
Photos: Craig Dugan ©Hedrich Blessing.

Most of the balustrades in Fig. 1.3.10 were cast in two-piece fiberglass forms that opened to allow stripping of the precast concrete. Some balusters were cast individually and then joined with the top and bottom rails in the field to form the desired length of balustrade. The stairs are also precast concrete.

The main feature of the parking structure in Fig. 1.3.11 is a 50-ft-tall (15.2 m) bookshelf on one side. The wall panels are curved on the outside face to resemble book spines sitting on a library shelf. A photographic vinyl film is attached to a light gauge metal sheet, which in turn is attached to the precast concrete. The structure's grand stairs are also made of precast concrete designed to look like a stack of books. Form liners were used to create the look of book pages.

Fig. 1.3.10
Millennium Park, Chicago, Illinois;
Architect: Skidmore, Owings & Merrill.

Fig. 1.3.11
Library District Parking Garage
Kansas City, Missouri;
Architect: BNIM and 360 Architecture (joint venture);
Photo: BNIM/360.

Sunscreens may be loadbearing, wall-supporting, or part of cladding. They may also be freestanding when used as dividers or fencing. Architectural sunscreens and large solid wall panels may be used to reinforce a strong design statement. Screens are often used to decoratively shield the space from sunlight or to block specific areas from public view, see page 397. They may also serve to renovate older buildings.

Barrier walls have become popular in recent years because of the growing need to control excessive noise pollution generated by busy airports and highways. Using a variety of finishes and textures on the outer surface, the barriers may be designed to blend in with the adjacent neighborhood.

More than 200 sculptured precast concrete sound barriers, Fig. 1.3.12, depicting wild life images from the surrounding landscape, were installed along a

Fig. 1.3.12
Maryland Interstate Highway 216
Howard County, Maryland;
Sculptor: Creative Design Resolutions, Inc.;
Photos: Creative Design Resolutions, Inc.

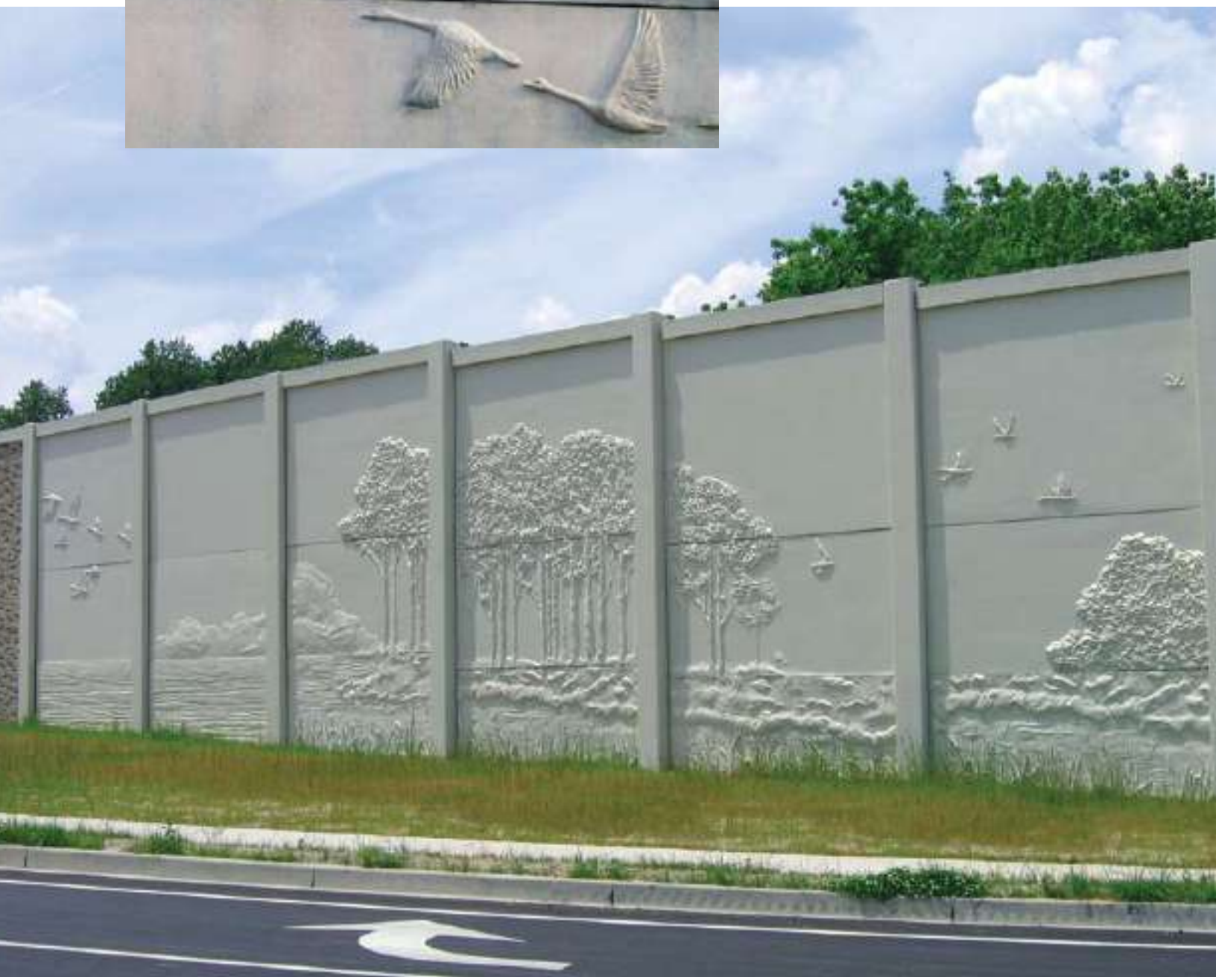

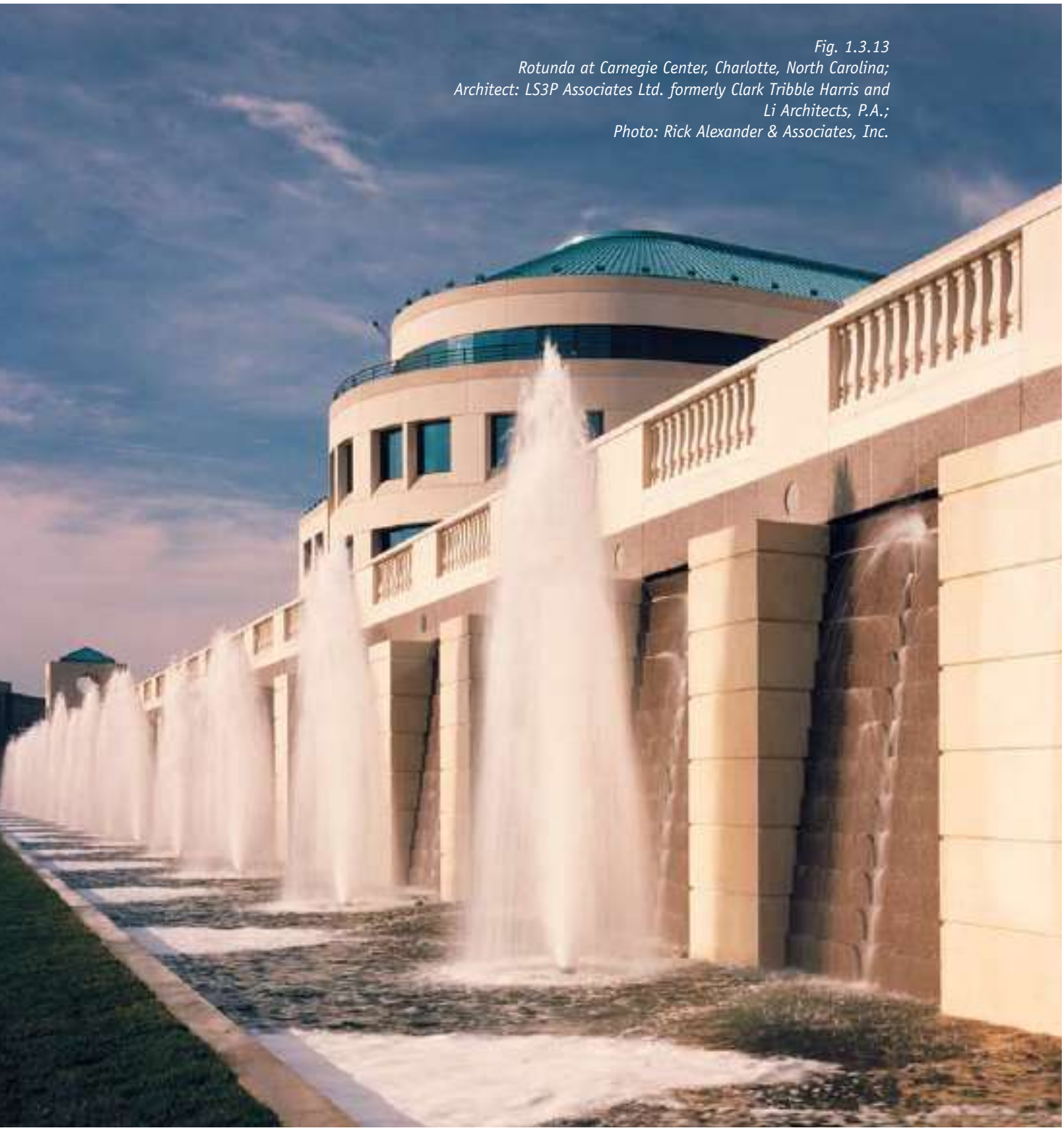

Fig. 1.3.13
Rotunda at Carnegie Center, Charlotte, North Carolina;
Architect: LS3P Associates Ltd. formerly Clark Tribble Harris and Li Architects, P.A.;
Photo: Rick Alexander & Associates, Inc.

busy, one mile (1.6 km) stretch of interstate highway. The modular sound barriers were designed to represent indigenous flora and fauna, including trees, birds, water, and landscapes.

In Fig. 1.3.13, a 500-ft-long (152 m) and 20-ft-high (6.1 m) precast concrete waterwall conceals the two-level parking structure below the building. This feature wall consists of 32 panels of gray precast concrete

Fig. 1.3.14
Millennium Park, Chicago, Illinois;
Architect: Skidmore, Owings & Merrill.

between vertical columns of cream precast concrete. Each gray panel has a decorative relief design cast in the abstract form of a tree with the stylized "limbs" on each side of the "trunk" continuously sprayed by individual horizontal water jets concealed in the cream columns.

As a replacement for terra cotta or stone ornamentation, precast concrete is an ideal material. Impressions can be taken of the ornaments and molds made to cast the replacements in concrete with highly refined, intricately detailed relief patterns. With sufficient repetition to amortize initial mold-making costs, ornamental precast concrete can be economically feasible.

Precast concrete with incised lettering can be used to produce identifying signs for parks or office development (Fig. 1.3.14).

1.4 BENEFITS AND ADVANTAGES OF ARCHITECTURAL PRECAST CONCRETE

When the design team works with the precaster from the outset of a project, it is more likely that the full benefits of precast concrete will be realized. As the project develops, the design team and precaster can discuss panelization, types of finishes, shapes, repetitive use of efficient and economical building modules, structural systems, delivery schedule, erection procedures, and sequencing. This time spent in development will pay off in accelerated construction time and significant cost savings. As a result, it is essential that the designer work with the local architectural precast concrete producer in the early design stages and throughout the development of contract documents. Properly implemented, an early and continuing dialogue between the designers and the precaster will ensure optimum product quality and appearance at a minimum installed-construction cost.

As the first and often longest-lasting impression, the exterior of a building is its signature. But a building envelope's materials are more than a visual application. Aesthetics, function, and cost play a role in achieving a successful project. Architectural precast concrete not only offers design freedom of architectural expression with visually interesting shapes that are functional in application, it contributes to durability, sustainability, energy efficiency, and improved occupant comfort and safety. At the same time, the plasticity of concrete allows the designer to achieve a high level of detail in the profile, scale, and character of a building that cannot be matched by other materials due to costs.

Durability: Architectural precast concrete panels provides proven long-term durability. It provides a façade that is exceptionally resistant to impact, corrosion, weathering, abrasion, and other ravages of time, making it virtually maintenance-free and resulting in preservation of the building's original look. The high cement contents and low water-cement ratios used in the precasting process, combined with proper compaction and curing in a controlled factory environment, ensure a dense, highly durable concrete. A low water-cement ratio concrete has been proven to resist weathering and corrosion. Air-entrainment is used to improve freezing and thawing resistance, particularly in severe environments.

Aesthetics: Architects find that precast concrete panels provide an unlimited vocabulary that allows design

concepts to be executed in a broad range of architectural styles, shapes, and sizes. The material offers limitless potential for developing and manipulating mass, color, form, texture, and detail to obtain simple, clean shapes that enhance an image of strength with aesthetic beauty. Different aggregates, color tones, textures, and patterns can be designed for each building in a complex to differentiate them. The initial plasticity of precast concrete makes it responsive to the designer's creative needs. Precast concrete mold-building techniques allow designers to enhance a building's visual interest through elements such as ribs, bullnoses, reveals, chamfers, or textures. Designers can economically incorporate details such as cornices, quoins, arches, and decorative relief panels. In addition to these benefits, the ability to manipulate color, form, and texture make precast concrete an excellent material to consider in situations where the relationship of a building to its existing context is an important design consideration. Precast concrete can be designed to harmonize with and complement other materials. Natural stone, brick, tile, or terra cotta can be cast into panels allowing designers even more choices for panel finishes. Precast concrete can also replicate the color and finish of a wide variety of costly facing materials.

Commitment to Quality: Architectural precast concrete units produced by PCI-Certified plants are manufactured under strict, factory-controlled conditions to an agreed production schedule ensuring a uniformly high-quality façade in the desired shapes, colors, and textures. To become PCI Certified, producers must satisfy an array of production, administrative, and organizational procedures along with close tolerances unique to precast concrete. To maintain certification, every PCI member must undergo stringent unannounced inspections each year by independent auditors. It is strongly recommended that PCI Certification be a requirement for the award of the precast contract to help maximize the quality of the finished product. This requirement may minimize the need for continuous inspections by the owner.

Life Cycle Cost: The life cycle cost of the structure is another area where architectural precast concrete exhibits superior performance. A precast concrete façade can be designed to match the intended life of a building with minimal maintenance, providing substantial long-term savings. Precast concrete panels present a durable, aesthetically pleasing exterior surface that is virtually air and watertight and does not require painting. This helps the building remain in first-class condition ensuring its desirability for future tenants or owners.

Initial Cost: Precast concrete's speed of erection and ability to be cast and erected year-round aids the entire construction team. Because the casting process does not rely on other critical-path activities to begin, units can be produced as soon as drawings are approved, ensuring units are ready for erection as soon as foundation work or supporting structure is completed (Fig. 1.4.1). These advantages allow the building's shell, whether loadbearing or cladding, to be enclosed quickly. This in turn allows interior trades to begin work earlier and compresses the overall building schedule. Faster completion reduces interim financing and construction management costs, results in earlier cash flows, and produces other economic benefits. This ultimately lowers the building's

Fig. 1.4.1 Architectural Precast Concrete Cladding Project Schedule

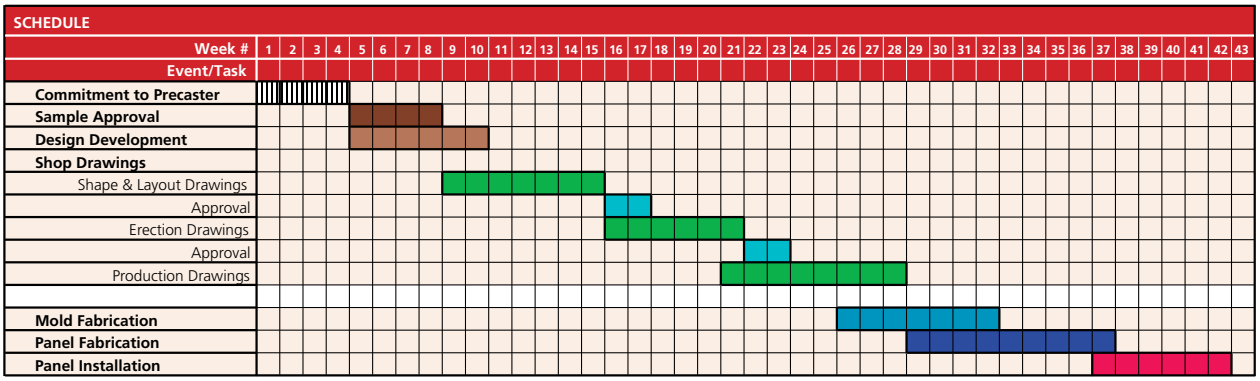

Note: Schedule durations are for illustration only.

long-term overall cost and can make the use of precast concrete more economical than other façade materials. Loadbearing panels can further reduce framing costs by providing a column-free perimeter. Depending on the floor plan, there also is a potential for reducing the number and/or size of interior columns, thereby aiding layout flexibility. This results in a more efficient and less costly construction. Cost savings of loadbearing panels are greatest for low to mid-rise structures of three to ten stories with a large ratio of wall-to-floor area.

Energy Efficiency: Precast concrete panels can be designed to provide a high degree of energy efficiency for the buildings they enclose. Recessed window walls, vertical fins, and various other sculptured shapes facilitate the design of many types of shading devices for window areas to reduce glare and solar gain. This provides economies in the cost of the air-conditioning system by reducing thermal load. Specific thermal characteristics of the wall can be designed for each face of the structure to suit its sun orientation. To reduce heating and cooling costs, precast concrete walls may either have insulation field applied to their backs, or incorporated at the plant to create sandwich wall panels. The thermal mass inertia of concrete, which is recognized in American Society of Heating, Refrigerating and Air-Conditioning Engineers (ASHRAE) standards, also reduces peak heating and cooling loads, thus saving energy year-round by reducing large daily temperature swings. In addition, precast concrete construction allows minimal air infiltration or exfiltration, reducing the potential for moisture problems due to moist air migrating into a wall and building.

Other Inherent Benefits: Architectural precast concrete is non-combustible with inherent fire resistant capabilities, creating a safe building envelope that helps protect personnel, equipment, and the building itself. That in turn reduces insurance rates. It also eliminates the need and cost of additional fireproofing measures, except when used as cladding on structural steel frames.

Environmental Impact: The inherent sound attenuation properties, due to precast concrete's mass, provide an economical acoustical barrier to exterior and interior noise penetration. These precast concrete panel attributes enhance their inherent cost effectiveness. The life-safety and tenant benefits provide a potent marketing asset when attracting long-term occupants.

Precast concrete is an environmentally sound material, produced from natural materials. No toxic substances are generated in use. Precast concrete uses by-products from other industries that previously were landfill items. Steel reinforcing bars are made from recycled automobile bodies and other recycled steel parts. Admixtures used to control flowability and increase durability use by-products from paper, aluminum, coal, and steel plants in their manufacture. Also, the production energy consumption of the concrete is quite small. Precast concrete construction allows minimal air infiltration; thermal mass of concrete delays internal temperature changes and reduces peak heating and cooling loads; and sculptured shapes facilitate the design of shading devices for window areas.

Precast concrete has the added quality of reflecting heat as well as light, thus reducing the "heat island" effect and higher temperatures common in urban areas. The resulting lower overall temperatures can make a difference in the amount of electricity consumed in air conditioning and can reduce smog formation, potentially improving air quality in urban areas.

Precast concrete wall panels can be reused when buildings are expanded. Non-loadbearing panels on the end are simply disconnected from the framing and additional panels and framing are added on each side. With the new addition in place, the end panels can be replaced. Concrete measures up well in regard to sustainability. Precast concrete strikes a perfect balance between meeting today's needs and preserving natural resources for tomorrow.

Single-Source Provider: Precast concrete cladding panels provide a one-source solution for supplying the exterior wall system. When precast concrete structural floors along with loadbearing panels are specified, the complete building shell can be supplied by one certified producer. This single-source solution ensures that the complete responsibility and accuracy for satisfying the design specifications rests with only one supplier. The precaster also is responsible for coordinating manufacturing and constructability issues, reducing the number of subcontractors, and minimizing cost. Also, the producer's staff of engineers are available to assist the design team from design conception through completed project.

Supplier Assistance: PCI Certified precasters can offer detailed expertise that allows the development of design techniques, engineering innovations, and sched-

uling improvements that save time and money from conceptual design to project completion. To maximize these benefits, the design team should interact and partner with the precaster early in the project's development stage. This ensures that each element is as cost effective as possible, taking full advantage of precast concrete's inherent performance characteristics. The result will be a functionally efficient and aesthetically pleasing structure that meets or exceeds the project's needs.

1.5 QUALITY ASSURANCE AND CERTIFICATION PROGRAMS

Quality assurance and plant certification are important items in the prefabrication process. This program responds to an ever-increasing demand from the marketplace for quality products and services.

The owner or architect must be confident that materials, methods, products, and the producer's quality control prodedures meet the requirements of the project. This assurance is available by requiring in the project specification that:

1. The precaster facility be certified by the PCI Plant Certification Program;
2. The precaster have personnel certified in the appropriate levels of the PCI Plant Quality Personnel Certification Program; and
3. The precast concrete erector be certified by the PCI Field Certification Program or the precaster have a qualified person to oversee the work of the erector.

Certification of precast concrete production facilities means that an independent inspection body has confirmed the plant has the capability to produce quality products and the in-house quality control system functions efficiently.

1.5.1 Plant Certification Program

Producers registered under the PCI Plant Certification Program in Product Group A have demonstrated that their processes for production and quality assurance meet or exceed industry-wide standards based on the PCI *Manual for Quality Control for Plants and Production of Architectural Precast Concrete Products* (MNL-117). Product Group A has two categories: **A1** for major, primary architectural panels and products; and **AT** for miscellaneous architectural trim elements. Plants must maintain a comprehensive, documented, and approved quality system that is present in every aspect of their business. Each certified plant conducts a formal quality control program with a trained, permanent quality control staff. The staff must meet the current requirements of the PCI Quality Control Personnel Certification Program. Conformance to the nationally accepted requirements is determined by a minimum of two audits per year. All audits are unannounced and most are two days in length. The audits are conducted by specially trained personnel employed by a national structural consulting engineering firm under contract to PCI and accredited by International Accreditation Service Inc. (IAS).

Audits cover all phases of production including shop drawings, materials, production methods, product handling and storage, appearance, testing, record keeping, quality control, personnel training, and safety practices. Failure to maintain a production plant at or above required standards results in loss of certification. A current listing of plants holding certification is published a minimum of four times each year and may be obtained by calling PCI or by visiting the PCI website at *www.pci.org*.

Care should be exercised in evaluating the effectiveness of other certification programs. Criteria should include:

1. Unannounced audits. They are fundamental to the program.
2. The auditor should be recognized as experienced in the field of precast and prestressed concrete.
3. The auditor should have particular experience with the products and production methods involved.
4. The auditor should be independent and not hired by the general contractor/construction manager or precaster.
5. The program should be based on the industry-approved and nationally recognized quality standards.
6. The auditor should view the entire fabrication cycle.
7. The program should be executed by a single auditing agency that ensures uniformity for all-size companies throughout the United States.
8. The program and auditing agency should be recognized by major public and private agencies and organizations.

1.5.2 Plant Quality Personnel Certification

Conducting an effective quality control program requires knowledgeable and motivated testing and inspection personnel. Each must understand quality basics, the necessity for quality control, how products are manufactured, and precisely how to conduct tests and inspections. PCI has been training quality control personnel since 1974. There are three levels of Plant Quality Personnel Certification.

Plant Quality Personnel Certification, Level I requires a basic level of understanding of the many quality control issues normally encountered in a precast concrete plant. It also requires current certification by the American Concrete Institute (ACI) Concrete Field Testing Technician Program, Grade 1. A candidate must have at least six months of industry experience.

Plant Quality Personnel Certification, Level II requires Level I as a prerequisite. Other requirements for Level II include demonstration of a greater level of knowledge of the topics for Level I, as well as at least one year of industry experience. Certification at Levels I and II is accomplished by passing a written examination.

Plant Quality Personnel Certification, Level III provides significant instruction in concrete materials and technology. Certification at this level requires Level II as a prerequisite. The candidate must have two years of industry experience or equivalent.

1.5.3 Field Certification Program

The Field Certification Program extends PCI quality assurance from fabrication (plant certification) to field installation. It has been found that participation in the program is highly beneficial in improving the quality of the installation and the safety and efficiency of the installation crews.

The PCI Field Certification Program confirms the capability of producer-erectors and independent erectors of precast concrete structures to handle and install precast concrete units in compliance with established industry standards. Specifying a PCI Qualified or Certified Erector or precaster with Certified Field Auditors (CFA) ensures the project specifier and owner that the erector has met the rigorous requirements of the PCI Field Certification Program.

An erector may be qualified or certified in up to three categories:

A – Architectural Systems (non-loadbearing cladding)

S1 – Simple Structural Systems (horizontal decking members, single-lift walls)

S2 – Complex Structural Systems (category S1 plus all other structural products, including loadbearing architectural units)

Under the PCI Field Certification Program, field audits of erecting crews are conducted by PCI-Certified Field Auditors (CFAs) and audits of organizational administrative controls related to erection projects are conducted by PCI-Certified Company Auditors. The auditing criteria are based on the industry's quality, procedural, and safety standards as presented in *PCI Erectors Manual – Standards and Guidelines for the Erection of Precast Concrete Products* (MNL-127); and *PCI Erection Safety for Precast and Prestressed Concrete* (MNL-132). Audits are conducted semi-annually on all of the erector's primary crews and cover all phases of the erection process including pre-construction planning, practices and procedures, equipment, safety, erection tolerances, and quality control. At least one of the two annual field audits for each crew must be performed by a CFA who works for a company independent of the erectors. In addition, an annual company audit must be passed certifying the company's managerial and administrative ability to meet the required standards. Failure to maintain work at or above required standards results in mandatory loss of PCI Qualified or Certified Erector status. A current list of PCI Qualified and Certified Erectors is published a minimum of four times each year or may be obtained by visiting the PCI website at *www.pci.org.*

1.6 DEFINITIONS

Admixture is a material other than water, aggregates, or cement used as an ingredient of concrete or grout to impart special characteristics. These are usually employed in very small amounts.

Air-Entraining admixture is a chemical added to the concrete for the purpose of providing minute bubbles of air to the concrete during mixing to improve the durability of concrete exposed to cyclical freezing and thawing in the presence of moisture.

Approval is an action with respect to shop drawings, samples, and other data that the general contractor or construction manager is required to submit. When used in this context, approval is only for general conformance with the design requirements and compliance with the information given in the contract documents.

Such action does not extend to means, methods, techniques, sequences, or procedures of construction, or to safety precautions and programs incident thereto, unless specifically required in the contract documents.

Architectural precast concrete refers to any precast concrete unit with a specified standard of uniform appearance, surface details, color, and texture. It is either a special or occasionally standard shape that through application or finish, shape, color, or texture contributes to the architectural form and finished effect of the structure; units may be part of the structural frame or non-structural cladding and may be conventionally reinforced or prestressed.

Backup mixture is the concrete mixture cast into the mold after the face mixture has been placed and consolidated. It is a less expensive mixture than the face mixture.

Bond breaker is a substance placed on a material to prevent it from bonding to the concrete, or between a face material, such as natural stone, and the concrete backup.

Bugholes are small holes on formed concrete surfaces created by entrapped air or water bubbles.

Bulkhead is a partition in formwork blocking fresh concrete from a section of the mold or the end of a mold that establishes the length of a precast concrete unit.

Cladding (non-loadbearing panel) is a wall unit that resists wind, seismic, or blast loads and its own weight and is attached to the structural frame. In many applications, it supports glazing systems.

Clearance is the interface space (distance) between two items. Normally, it is specified to allow for product and erection tolerances and for anticipated movement.

Connections are a structural assembly or component that transfers forces from one precast concrete member to another, or from one precast concrete member to another type of structural member.

Construction Manager (CM) is a person or firm engaged by the owner to manage and administer the construction.

Contract documents are the design drawings and specifications, as well as general and supplementary conditions and addenda, that define the construction and the terms and conditions for performing the work. These documents are incorporated by reference into the contract.

Cover is the distance between the surface of the reinforcement and the nearest concrete surface.

Crazing is a network of fine cracks in random directions breaking the exposed face of a panel into areas from $^1/_4$ to 3 in. (6 to 75 mm) across.

Creep (or plastic flow) is the time-dependent deformation of steel or concrete due to sustained load.

Dap is the blocked out section at the support end of a beam or floor and roof member.

Design (as a transitive verb) The process of applying the principles of structural mechanics and materials science, and interpreting code regulations to determine the geometry, composition, and arrangement of members and their connections in order to establish the composition and configuration of a structure.

Design team is persons or firms engaged by the owner or owner's representative to perform the architectural and structural design for the structure and/or to provide services during the construction process.

Designer (prime consultant) is the architect, engineer, or other professional responsible for the design of the building or structure of which the precast concrete forms a part.

Draft is the slope of concrete surface in relation to the direction in which the precast concrete element is withdrawn from the mold; it is provided to facilitate stripping with a minimum of mold breakdown.

Drift is the lateral deflection of one level at its center of mass at and above that level. It is the difference in predicted movement of the structure between two adjacent stories under lateral loads.

Engineer of record (EOR) is the registered professional engineer (or architect) who is responsible for developing the design drawings and specifications in such a manner as to meet the applicable requirements of governing state laws and of local building authorities. The EOR is commonly identified by the professional engineer's seal on the design drawings and specifications.

Envelope mold is a box mold where all sides remain

in place during the entire casting and stripping cycle.

Erector is usually the subcontractor who erects the precast concrete components at the site. The general contractor may also be the erector.

Exposed aggregate concrete is concrete with the aggregates exposed by surface treatment. Different degrees of exposure are defined as follows:

Light exposure — Only the surface skin of cement and sand is removed, just sufficiently to expose the edges of the closest coarse aggregate.

Medium exposure — A further removal of cement and sand to cause the coarse aggregate to visually appear approximately equal in area to the matrix.

Deep exposure — Cement and sand have been removed from the surface so that the coarse aggregate becomes the major surface feature.

Face mixture is the concrete at the exposed face of a precast concrete unit used for specific appearance reasons.

False joint is scoring on the face of a precast concrete unit; it is used for aesthetic or weathering purposes and normally made to simulate an actual joint (see also **Reveal**).

Form see **Mold**.

Gap-graded aggregate is a mixture with one or more normal aggregate sizes eliminated and/or with a heavier concentration of certain aggregate sizes over and above standard gradation limits. It is used to obtain a specific, more uniform exposed aggregate finish.

General Contractor (GC) is a person or firm engaged by the owner to construct all or part of the project. The general contractor supervises the work of its subcontractors and coordinates the work with other contractors.

Hardware is a collective term applied to items used in connecting precast concrete units or attaching or accommodating adjacent materials or equipment. Hardware is normally divided into five categories:

Field or contractor's hardware—Items to be placed on or in the structure in order to receive the precast concrete units, such as anchor bolts, angles, or plates with suitable anchors.

Plant hardware—Items to be embedded in the precast concrete units themselves, either for connections and precast concrete erector's work, or for other trades.

Field installed pre-erection hardware—Miscellaneous loose steel pre-welded or pre-bolted to the structure.

Erection hardware—All loose hardware necessary for the installation of the precast concrete units.

Accessory hardware—Items to be cast into the precast concrete units, designed and supplied by the trade requiring them.

Homogeneous mixture is a uniform concrete mixture used throughout a precast concrete element.

Inserts are connecting or handling devices cast into precast concrete units.

Loadbearing precast concrete units are those precast concrete units that form an integral part of the structure and resist and transfer loads applied from other elements. Therefore, a loadbearing member cannot be removed without affecting the strength or stability of the structure.

Master mold is a mold that allows a maximum number of casts per project. Units cast in such molds need not be identical provided the changes in the units can be accomplished simply as pre-engineered mold modifications.

Matrix is the portion of the concrete mixture containing only the cement and fine aggregate (sand); it binds the coarse aggregate.

Mold is the container or surface against which fresh concrete is cast to give it a desired shape; it is sometimes used interchangeably with "form." (The term is used in this manual for custom-made forms for specific projects while the term "form" is associated with standard forms or forms of standard cross-section.)

Optimum quality is the level of quality (in terms of appearance, strength, and durability) that is appropriate for the specific product, its particular application, and its expected performance requirements. Quality also refers to the totality of features and characteristics of a product that bear on its ability to satisfy stated needs. Realistic cost estimates for producing the pre-

cast concrete units within stated tolerances are factors which must be considered in determining this level.

Non-Loadbearing precast concrete units see **Cladding**.

Precaster is the firm that manufactures the precast concrete components.

Precast engineer is the person or firm who designs precast concrete members for specified loads and who may also direct the preparation of the shop drawings. The precast engineer may be employed by the precaster or be an independent person or firm to whom the precaster subcontracts the work.

Prestressed concrete is concrete in which permanent internal stresses have been induced by forces caused by tensioned steel. This may be accomplished by:

Pretensioning—The method of prestressing in which the tendons (prestressing steel) are tensioned (elongated) and then anchored while the concrete in the member is cast around the tendons, and released when the concrete is strong enough to receive the forces from the tendon through bond.

Post-tensioning—The method of prestressing in which the tendons (prestressing steel) are kept from bonding to the fresh (wet) concrete, then elongated and anchored directly against the hardened concrete, imparting stresses through end bearing.

Quality assurance (QA) is all those planned or systematic actions necessary to ensure that the final product or service will satisfy given requirements for quality and performance of the intended function. Typically, the quality assurance effort will focus on the requirements of the overall project, thus identifying the quality control requirements for member fabrication.

Quality control (QC) is those planned actions that provide a means to measure and control the characteristics of members and materials to predetermined quantitative criteria.

Quirk miter is a corner formed by two chamfered members to eliminate sharp corners and ease alignment.

Retarder, surface is a chemical applied to the mold surface, used to retard or delay the hardening of the cement paste on a concrete surface within a time period and to a depth to facilitate removal of this paste after the concrete element is otherwise cured (a method for producing exposed aggregate finish).

Return is a projection of like cross-section that is 90 degrees to, or splayed from, the main face or plane of view.

Reveal is a groove (rustication) in a panel face generally used to create a desired architectural effect. It is also the projection of the coarse aggregate in an exposed aggregate finish from the matrix after exposure.

Rustication see **Reveal**.

Samples are a group of units, or portion of material, taken from a larger collection of units or quantity of material, which serves to provide information that can be used as a basis for action on the larger quantity or on the production process; the term is also used in the sense of a sample of observations.

Design reference samples are usually small specimens, 12 x 12 in. (300 x 300 mm), made by the precast concrete plant laboratory to provide the designer with early conceptual ideas of color and texture.

Bid reference samples are normally small specimens, 12 x 12 in. (300 x 300 mm), made by a producer to show the designer what can be made locally and is used as a basis for the producer's bid.

Selection samples are larger than bid reference samples and are made by the successful producer before casting any units; they become the basis for accepting the appearance of finishes. (Full-size production run elements are then approved and become the final standard for acceptance.)

Sandwich wall panel is a wall panel consisting of two layers (wythes) of concrete fully or partly separated by a layer of insulation.

Sealants are flexible materials used to seal joints between precast concrete units and between such units and adjacent materials.

Sealers or protective coatings are clear chemical compounds applied to the surface of precast concrete units for the purpose of improving weathering qualities or reducing water absorption.

Set-up is the process of preparing molds for casting including installation of materials (reinforcement and hardware) prior to the actual placing of concrete.

Sequential casting see **Two-stage precasting**.

Shear wall is a wall designed to transfer lateral forces acting parallel to the face of the wall, from the superstructure to the foundation.

Shop drawings are graphic diagrams of precast concrete units and their connecting hardware, developed from information in the contract documents. They show information needed for both field assembly (erection) and manufacture (production) of the precast concrete. They are normally divided into:

Erection drawings—All drawings used to define the shape, location, connections, joint treatment, and interfacing with other materials for all precast concrete units within a given project. Special handling instructions and information for other trades and the general contractor are also shown.

Anchor setting or contractor's setting drawings—Giving the location of all anchoring hardware cast into or fastened to the building or structure.

Production drawings—The actual detail drawings necessary for production of the precast concrete units. Such drawings may be set-up drawings or reinforcement and hardware drawings. They should completely define all finish requirements and include details of all materials used in the finished precast concrete units. They are normally not submitted for approval.

Shrinkage is the volume change in precast concrete units caused by drying that normally occurs during the curing and initial life of concrete members.

Side rail is the removable side of a mold.

Strongback is a temporary structural beam or truss attached to the back of a precast concrete member to stiffen or reinforce it during shipping and handling operations.

Structural precast concrete products are units normally produced in standard shapes that carry dead and live load or another units weight. Architectural treatments may be provided on the surfaces of these structural elements, and these should be specially listed in Contract Documents. Quality assurance for structural precast and structural precast with an architectural finish is defined in *PCI Manual for Quality Control for Plants and Production of Structural Precast Concrete* Products (MNL-116).

Thermal movement is the volume change in precast concrete units caused by temperature variations.

Tolerances are (a) the permitted variation from a basic dimension or quantity, as in the length or width of a member; (b) the range of variation permitted in maintaining a basic dimension, as in an alignment tolerance; and (c) a permitted variation from location or alignment. There is no intent to split tolerances between structural and architectural tolerances on the basis of finish or color. Finish and color are separate issues related to project aesthetic requirements.

Tooling refers to most of the manufacturing and service processes preceding the actual set-up and casting operations.

Two-stage precasting is the casting of large or steep returns as separate pieces to achieve matching high-quality finishes on all exposed faces and then joining the separate pieces with dry joints to allow the separate castings to appear and perform as one homogeneous unit.

Unit (member, element) in this document, a precast concrete piece, or component.

Weatherproofing is the process of protecting all joints and openings from the penetration of moisture and wind.

Weather sealing is the process of treating wall areas for improved weathering properties; see also **Sealers**.

Wythe is a continuous vertical section of wall tied to its adjacent vertical element (part of a composite wall).

Juarez Complex
Mexico, D.F., Mexico;
Architect: Legorreta + Legorreta;
Photo: José Ignacio González Manterola.

CHAPTER TWO
DESIGN CONCEPTS RELATED TO USAGE AND ECONOMICS

2.1 GENERAL COST FACTORS

The structures reviewed in Section 1.2 illustrate the wide range of projects utilizing architectural precast concrete. During the conceptual stage the designer must consider the cost implications of material selections, textures, surface geometries, cross-sections, piece sizes, unit repetition, and erection methods. The variations in scope, complexity, and detailing make it difficult to provide accurate cost information for a project in terms of price per square foot (m^2) of wall area prior to completion of the design concept.

After a design has advanced to the schematic stage, and the general shapes, colors, and finishes have been defined, more accurate cost estimates can be provided. Until this stage is reached, architects are encouraged to seek the advice of precasters and consultants. Selected guidelines regarding cost of architectural precast concrete are included in this chapter for further assistance.

The architect who desires a more detailed understanding of the cost factors involved in precast concrete construction is advised to study both **Surface Aesthetics** in Chapter 3 and **Design** in Chapter 4. Many of the recommendations in these chapters are, in the final analysis, based upon considerations of economy. Chapter 6, dealing with **Guide Specifications**, will highlight the items that should be included in the specifications in order to define the optimum quality for a specific project. This in turn should help in obtaining accurate proposals from potential bidders.

The nature of precast concrete is such that nearly anything that can be drawn, structurally designed, and readily transported can be constructed. To do this within reasonable and stated cost limits requires careful consideration of design and detailing. Several cost factors influencing architectural precast concrete are interdependent on each other. For example, a cost-efficient sculptured or intricate design may be achieved within a limited budget by selecting economical concrete mixtures and finishes combined with repetitive units and efficient production and erection details.

The small college library shown in Fig. 2.1.1 is clad in exposed aggregate architectural precast concrete. The smooth horizontal banding and window trim detailing contrasts with the rough texture of the exposed aggregate facing. The effect achieved is similar to that of the molded stone banding contrasting with the rough cut stone on many of the surrounding older campus buildings. Use of repetition made the precast concrete panels more cost effective than cut stone.

Repetition in panel design is also the key to achieving quality and economy in the design of walls. During the design stage, the exterior walls of a typical office building can be analyzed at three basic locations:

(1) At lower level floors, normally the ground floor and mezzanine are where significant architectural expression and detailing will occur;

(2) At all typical floors where repetition of panel size, shape, and finish occur; and

(3) At the top floor, parapet, mechanical floors, and penthouse, where there is a likelihood of increased panel length and often absence of window openings.

Fig. 2.1.1
Olin Library, Kenyon College, Gambier, Ohio; Architect: Shepley Bulfinch Richardson and Abbott; Photo: Nick Wheeler/Wheeler Photographics.

A cost breakdown of these three locations will usually illustrate that the lowest wall square foot cost is for those on the typical floors because of the volume and repetition. If the unit cost of either location 1 or 3 appears expensive in relation to location 2, a review may be useful, unless the areas involved are insignificant in relation to the overall area of the building. The elements which may be considered in such a review of locations 1 and 3 follows:

Walls for lower level floor(s)

The optimum solution for a ground floor would be a design that allows the precast concrete units to be cast in the same master mold as contemplated for the typical floors. This holds true even with the larger openings, doors, or entrance areas normally required for such a floor. The illustration in Fig. 2.1.2 is a good example of this. This convention hotel has a 7-story podium and a 27-story hotel tower. An important design criteria was to create an image for the building compatible with the highly textured and detailed finishes on adjacent landmark buildings. Panel configuration varied from column/lintel "stick" construction and framed flat panels at the building podium public spaces to single and double flat panels with openings for field-installed windows. Typical window panels are horizontal, double openings at the flat tower face and vertical, double openings at the curved turrets with false joints in each panel to create the appearance of stone construction and uniformity of panel sizes. Panels were configured to the maximum size that could be transported by semi-trailer and to the maximum weight that could be hoisted by crane.

Fig. 2.1.2 Sheraton Chicago Hotel & Towers, Chicago, Illinois; Architect: Solomon Cordwell Buenz & Associates Inc.; Photo: Jim Hedrich ©Hedrich Blessing.

If the ground floor design does not lend itself to the master mold concept in relation to typical floors, it is often the simplest solution to use precast concrete solely as cladding consisting of flat sections with returns only as necessary. One flat mold can be the master mold and modifications can be obtained by relatively simple adjustment of bulkheads. Flat panels may also be economical because the layout of a ground floor often precludes much repetition.

A cladding solution with flat panels and minimum returns may lead to numerous, and fairly small, panels contradicting later recommendations in this manual. Smaller flat units in large numbers may still be more economical than larger units with little repetition and high tooling costs. Erection of the larger number of units may be partially offset by the use of small cranes or forklifts, which are often adequate for lower elevations.

A cladding solution for a ground-floor level design often allows the choice of more expensive finishes for this area only. Consideration should be given at the ground-floor to the proximity of the units to pedestrian traffic. In some cases accumulation of snow or dirt against ground-floor panels may influence choice of finish such as natural stone veneer-faced precast concrete, because ease of cleaning becomes an important factor. The finish requirements for the typical floors

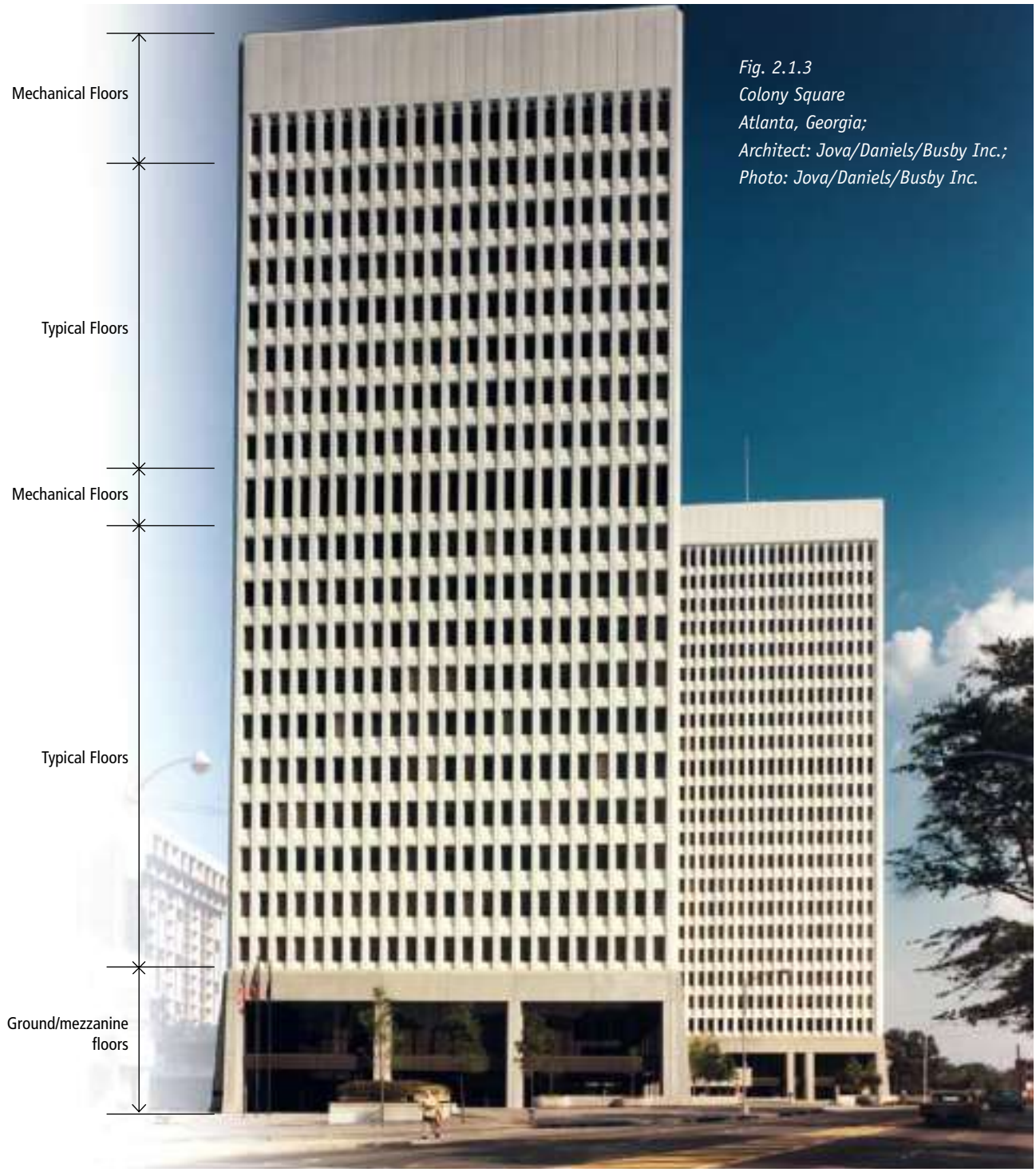

Fig. 2.1.3
Colony Square
Atlanta, Georgia;
Architect: Jova/Daniels/Busby Inc.;
Photo: Jova/Daniels/Busby Inc.

may be less demanding, suggesting a different finish, provided the combination is aesthetically pleasing or has a logical separation.

Walls for top floor(s)

The architect should balance the shape and size requirements for the top floor panels with a reasonable utilization of molds being used on the rest of the project. The top floor is not the place to use excessively large units unless the design and budget warrant the additional crane cost. Figure 2.1.3 illustrates the use of units that are narrower in width than those of the lower floors.

Fig. 2.1.4(a), (b) & (c)
Crescent VIII Office Building
Denver, Colorado;
Architect: Barber Architecture;
Photos (b&c) LaCasse Photography.

The project in Fig. 2.1.4 shows an application of some of the major points made in this chapter. The center bay of the building contains stairs, special service areas, and an elevator core (Fig. 2.1.4[a]). The core was designed to transmit all horizontal loads to the foundation. The use of integrated, loadbearing architectural precast spandrels and a precast concrete core facilitated a tight construction schedule. The total precast concrete structure was erected in only eight weeks with two cranes. The horizontal mass of the building is broken by expressed vertical pilasters (Fig. 2.1.4[b]), which break the building into a series of regular bays, highlighted by granite and concrete accent medallions. Details such as reveals and medallions also help to reduce the building's scale and offer visual interest at the pedestrian level (Fig. 2.1.4[c]). The architect wanted to maximize the window space while also maintaining a heavier, substantial wall form. This was achieved with the detailing and implication of the beam-column look of the precast concrete panels.

The architect's challenge for the project in Fig. 2.1.5(a) was to come up with an exterior building skin for a

Fig. 2.1.5(a), (b), (c)
Shannon Oaks
Cary, North Carolina;
Architect: Cline Davis Architects PA; Photos: Cline Design Associates.

new two-story, 50,000 ft^2 (4600 m^2) commercial office building that captured the essence of Neo-French Classical architecture while staying within a fixed market rate cost for this type of structure. The precaster was brought in at an early design stage to work with the architect and owner to develop a very detailed, typical self-supporting wall panel 10 ft (3 m) wide x 34 ft (10.4 m) high. Great care was taken to build a mold that could be used over and over again, but would give the project a wonderful sense of detail and richness (Fig. 2.1.5[b] and [c]). Because of the repetitive nature of the panels and their ease of installation, the precast concrete system ended up costing less than brick and steel

Fig. 2.1.5(c) Precast panel elevations and plan details.

construction. The result of using this architectural precast concrete system was a beautifully detailed Class A office building that was 90% leased within four months.

Coordinated design, complete dimensioning, and clear specifications (see Chapter 6) are also important factors in obtaining optimum quality and economy using architectural precast concrete. In the preparation of the contract documents, the selection and description of materials and performance requirements should be clearly stated. They should not be left open to variable interpretations, however nor should they be overly restrictive.

The contract documents should make reference to the PCI *Manual for Quality Control for Plants and Production of Architectural Precast Concrete Products* (MNL-117), which includes Category A-1 certification of the production facility, as the industry guideline for production of architectural precast concrete elements. Exceptions to this standard or specific requirements should be clearly set forth in the contract documents.

2.2 DESIGN ECONOMY

Understanding architectural precast costs is essential to designing affordable façades that enhance the overall building design while meeting the owner's budget. Understanding the architectural precast concrete manufacturing process can help achieve design goals and control costs.

During a project's conceptual stage, the designer has many variables to consider that affect precast concrete cost. A local precaster can assist with preliminary design and budget estimating early in the project's design phase. Piece size and repetition typically have the most significant cost impacts. In addition, material selection, textures, surface geometry, cross-section, erection details, jobsite access conditions, and connections can affect cost. The custom, sculptured designs that are possible with precast concrete may be achieved within a limited budget by selecting appropriate aggregates and textures combined with repetitive units and efficient production and erection details. Input from the precaster can be beneficial in developing options for creating an economical design that also satisfies the designer's aesthetic requirements.

During preliminary design, a precast concrete project can be preliminarly budgeted on a square-foot (m^2) basis. Although this provides a starting point, it is recommended that the designer seek additional estimating assistance from a precaster. Working with a precaster on a specific project will help determine a final budget that is more accurate than a ballpark price per square foot (m^2). A cost per square foot (m^2) can be misleading to general contractors and architects because square foot (m^2) quantities are calculated differently from precaster to precaster depending on the take-off procedures. Also, total work scope requirements such as site restrictions, work scope inclusions, and detail manufacturing requirements are initially unknown.

Budget pricing from local precasters, submitted in writing and including assumptions, will aid design efforts from schematic design through final contract documents. As a project evolves from preliminary sketches through working drawings, the precaster(s) should be informed of all changes.

Pricing accuracy depends on the information provided to the precaster's estimator. This discussion on design economy uses square foot (m^2) prices to describe a designer's precast concrete options. All prices are for relative comparison only and should not be used to make decisions for individual projects.

The design and detailing of the precast concrete units should reflect good production concepts. Consultation with a precaster at an early stage will be helpful. The designer needs to define the shape of the units and their appearance.

2.2.1 Repetition

A key element to cost-effective production is minimizing the number of molds and mold changes, and maximizing the number of castings from each mold, particularly if the molds have shape. Efficiency and economy are achieved by making it possible for similar, if not identical, shapes to be produced from the same basic (master) mold, and by minimizing the time required to disassemble a mold and reassemble it for the manufacture of the next piece. Figure 2.2.1(a) shows the master mold for the production of the arch member panels for the project in Fig. 3.3.18(a), page 121. The largest segment of the arch is shown in Fig. 2.2.1(b).

Careful planning is necessary to achieve good repetition in the design without sacrificing design freedom. For example, many design variations may be developed by incorporating two basic architectural panel types (spandrel panels and floor-to-floor panels with

openings) on the same structure. These panel types may also be varied with different architectural finishes and textures. Attention should be focused on the overall geometry of the structure, not only on the shape of the panel. The cost of complex shapes becomes economical through repetitive precasting as the investment made in fabricating a complex mold is amortized over a greater number of pieces. Occasionally, due to production schedule compliance, a precaster may need to construct multiple molds to produce the required number of panels within a certain time period.

Fig. 2.2.1(a) & (b)
The master mold for the production of the arch member panels for Fig. 3.3.18(a) page 121.
Jefferson Pilot
Greensboro, North Carolina; Architect: Smallwood, Reynolds, Stewart, Stewart & Associates; Photos: Dean Gwin.

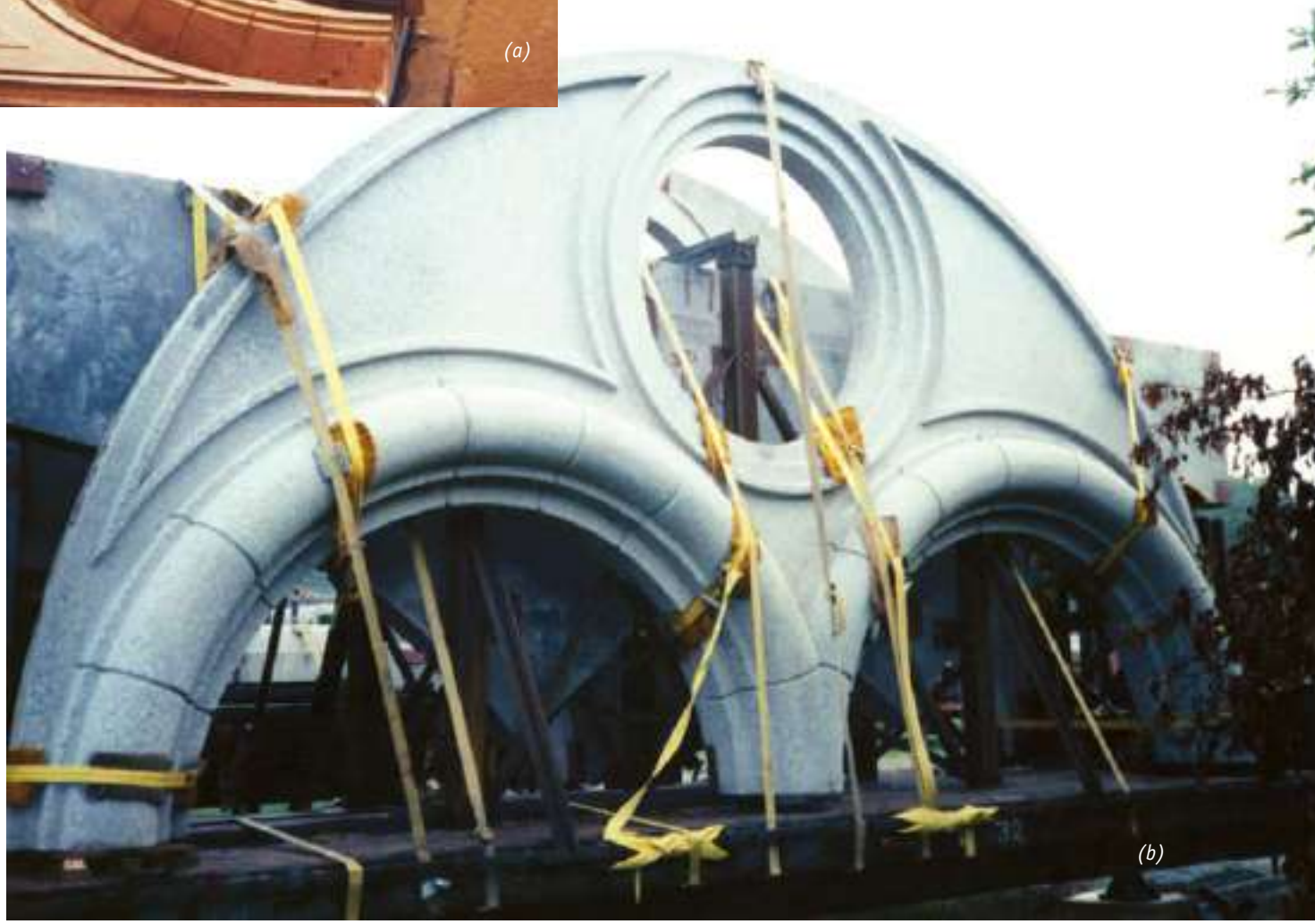

Fig. 2.2.2(a) & (b) Trinity Place, Boston, Massachusetts; Architect: CBT/Childs Bertman Tseckares, Inc.; Photos: Edward Jacoby.

The multifamily residential condominium with street-level retail space is situated at the opening of a major thoroughfare between the two distinct city districts (Fig. 2.2.2[a]). The building's precast concrete façade was chosen as a means of integrating this building with the surrounding neighborhood. The ability to control the color and texture of the finish, and the ability to break up the façade into smaller elements with rustication joints, allows the precast concrete to relate comfortably to both the 19th- and 21st-century buildings that surround it. The use of precast concrete provided the ability to create a prefabricated window anchor system throughout the building, which enabled the creation of multiple visual elements. On the lower floors, window boxes protrude from the façade, bringing the building to life for pedestrians (Fig. 2.2.2[b]). Elsewhere, the designers were able to achieve deep window recesses, especially on the tower portion of the building. This resulted in more-pronounced shadow lines, providing enhanced visual definition on the tower portion of the building. A strong pilaster expression, enhancing the vertical planes of the building, is also achieved through the use of precast concrete. Combined with the deeply recessed windows, the articulation of the pilaster forms provides a dimensional texture to the entire building.

It is often the case that, in the initial design stage, a high degree of repetition appears possible. However, as the details are finalized, considerable discipline is required on the part of the designer if the creation of a large number of non-repetitive units is to be avoided. Budget costs used at the initial design stage should take into account the possibility that the number of different units will increase as the design progresses. If non-repetitive units are unavoidable, costs can be minimized if the units can be cast from a "master mold" with simple modifications without the need for completely different molds. However, even relatively minor variations, such as a dimensional change of a rail, blockout location, connection hardware position, or a different number of blockouts of any kind, are mold changes that increase costs.

Fig. 2.2.3(a) & (b)
111 Huntington Avenue/Belvedere Residential
Boston, Massachusetts; Architect:CBT/Childs Bertman Tseckares, Inc.; Photos: Jonathan Hillyer.

The project in Fig. 2.2.3(a) is an integral part of a substantial redevelopment of an outdated 1960s urban complex. The major elements include a 36-story office tower; an 11-story, 61-unit residential building; and an enclosed winter garden pedestrian arcade. The residential building follows the curving street edge, taking a graceful crescent shape. The precast concrete lends itself to the fluidity of such a design, as the convex base of the building gently turns inward to form a concave surface. The consistency of the precast concrete was a necessity in the construction of the circular design, which requires repetition in form to achieve its desired look (Fig. 2.2.3[b]). The precast concrete takes on a columnar form around the entrance to the winter garden, and continues along the garden's entire 480 ft (146 m) length, providing a rhythmic pattern both internally and externally on the adjacent park. The precast concrete base to the office tower skillfully blends with the steel and glass construction. The base integrates vertically with the tower that soars above it, as precast concrete "fingers" reach upward into the highrise portion of the structure as the material transitions. The precast concrete forms a delicate frame for the window walls and incorporates scale, dimension, and shadow to the wall.

If unfamiliar with architectural precast concrete, prior to designing wall panels, the architect should visit an architectural precast concrete manufacturing plant, as well as any projects that are under way. This way the designer can become familiar with the manufacturing processes and installation procedures and, most importantly, establish realistic expectations for the finished product. Elements such as the fabrication of molds, challenges to casting and finishing specific designs or shapes, relative material costs, handling methods at the plant and jobsite, approaches for connecting panels to a structure, and establishing acceptable color ranges are important to fully understand precast concrete and maximize its potential.

Reveals and rustications must be placed in a repetitive pattern in order to minimize modification throughout a mold's life. Reveals, like all form features, must be designed with draft (by creating bevels) so the panel can be stripped from the mold without damaging the mold feature.

Cost premiums are introduced to a project when the panel cross-section becomes more complex or intri-

cate surface features are added. Projecting cornices, bullnoses, form liners, bottom and/or top returns, and curves are the most typical features to be added. The exact sizes, shapes, and locations are the designer's options. Cost will be added if the location of these features within a mold will be changed frequently. On the other hand, these intricate features can be added at a minimal cost if they are used repetitively in the overall design.

The point behind designing repetitive pieces is to amortize engineering and mold costs effectively. As many pieces as possible should be designed to be cast in the same mold and produced from a single shop drawing.

2.2.2 Mold Costs

Mold cost depends on size, complexity, and materials used. The mold material selected and number of molds depend on a project's schedule. A project with a long precast concrete production period should permit fewer molds to be built.

The architect can make a significant contribution to economic production by designing precast concrete panels with knowledge of the master mold concept and by providing the precaster with sufficient production lead-time, making the duplication of molds to meet project schedule requirements unnecessary. The concept is simply to design the largest possible mold for a particular unit, whereby several variations from the same mold can be produced by varying mold component accessories. Units cast in this mold need not be identical, provided the changes in the units can be accomplished through pre-engineered mold modifications. These modifications should be achieved with a minimum change-over time and without jeopardizing the usefulness or quality of the original mold. Typical applications are shown in Fig. 2.2.4. When using a master mold, individual castings do not have to be the same color or texture.

It is relatively easy to alter the panel size if the variations can be contained within the total master mold envelope. This strategy eliminates the need (and cost) of constructing a mold for every panel change. The use of bulkheads, blockouts or reveals placed on top of the mold surface is less expensive than cutting into the mold surface for a projecting detail.

When a large number of precast concrete units can be produced in each mold, the cost per square foot will be more economical (Table 2.2.1 [mold cost is for illustration only]). The master mold concept is illustrated in Fig. 2.2.4.

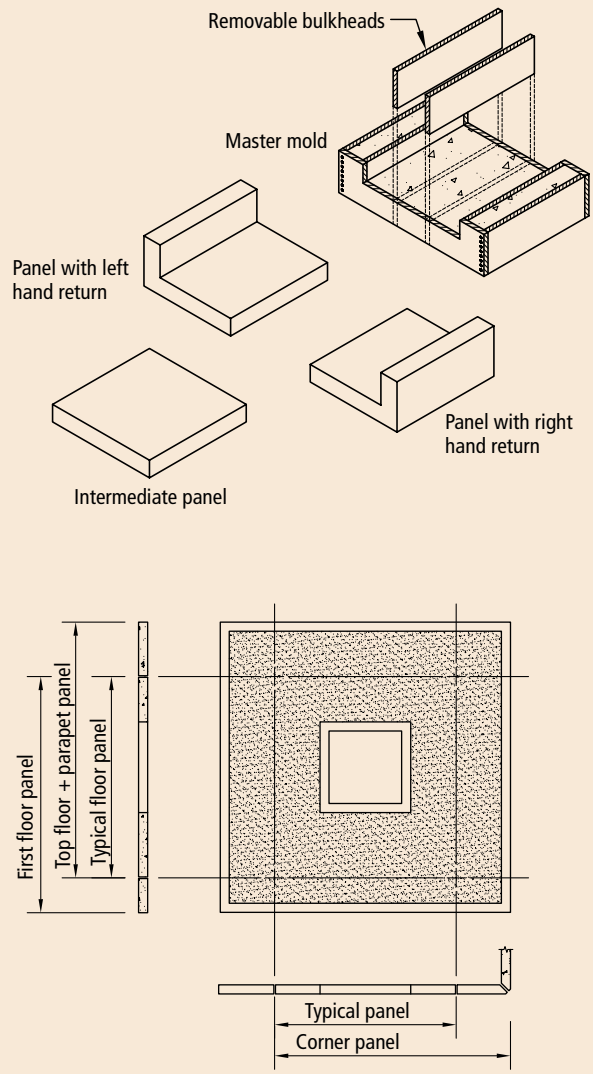

Fig. 2.2.4 Views of master mold.

Number of uses	Panel size, ft²	Mold cost	Mold Cost per ft²
1	200	$5000	$25.00
10	200	$5000	$2.50
20	200	$5000	$1.25
30	200	$5000	$0.83

Table 2.2.1. Effect of repetition on panel mold square foot cost. (Mold cost is for illustration only.)

In these examples, a large number of panels can be produced from a single mold, built to accommodate the largest piece and then subdivided as needed to produce the other required sizes. Whenever possible, the largest pieces should be produced first to avoid casting on areas that have become worn and damaged by placing and fastening side-

form bulkheads. Although every project will have some atypical conditions, the most successful and cost-effective projects maximize the repetition of elements. The more often a mold is re-used, the lower the unit cost of the piece. This means that careful planning is necessary to achieve good repetition without sacrificing design freedom.

The premium cost for complex shapes can be controlled by adding details to specific forms only. Examples include designing a cornice at parapet panels, a sill detail at intermediate floors, or one elevation as a radius.

An example of pre-engineered mold changes is shown in the models for a loadbearing panel in Fig. 2.2.5. The forms were made in two pieces that bolt together. The head section was removable and could be replaced with a modified upper fascia to achieve design variations. The process is illustrated starting with the two basic panels joined at the jobsite with the addition of a corner unit (Fig. 2.2.5[a]). By redesigning the upper fascia only, the panel takes on a new look, while keeping costs substantially lower, rather than if a complete new mold were needed (Fig. 2.2.5[b]). All of the engineering of the loadbearing section remains unchanged. Even though the panel in (a) is essentially the same as (b), the slight change in height and the deletion of fins creates a different appearance. Fig. 2.2.5(c) shows the same panels with no fins and varying fascia heights.

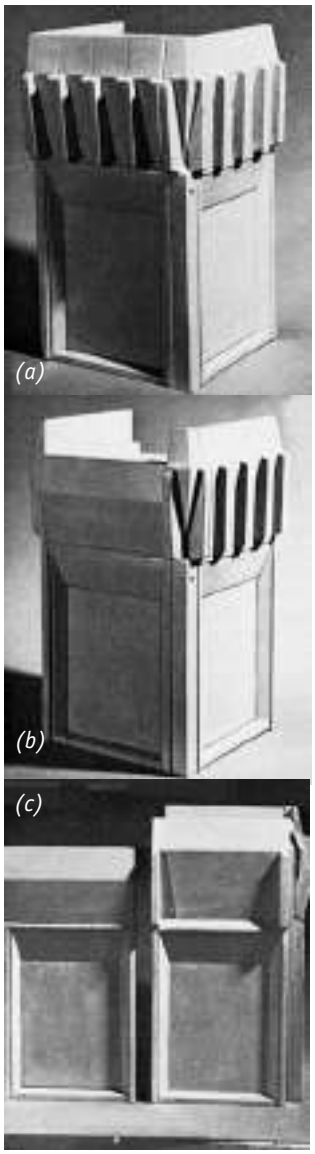

Fig. 2.2.5 Pre-engineered mold changes.

The wide flat center section of the panel can be blocked out for full windows, window frames, or doorways. Also, different types of concrete finishes and textures are possible in the center area. A demarcation groove makes casting of the different finishes a simple operation. By having the flexibility of varying expressed material usage, it is possible to relate the basic tone of the design to the existing surrounding structures.

Present bidding practices often result in late award of precast concrete subcontracts. The number of molds of a given type required for a project often is determined by time allowed for completing the project. In many cases, this time factor to meet the project's schedule is what creates the demand for duplicate molds, overriding the desire for mold economy. The necessity for extra molds increases costs and partially offsets the intent of designing for high repetition. The designer should discuss realistic precast concrete engineering and production lead times for the project with a precaster. It is vital to promptly respond to requests for information (RFIs) to ensure that shop drawings or, at least, shape drawings are approved and mold manufacture begins on schedule. Precast concrete production lead time is an activity that cannot be effectively compressed. Overrunning lead time will impair production, delivery, and, hence, construction.

It is vital to include precast concrete scheduling information with the bid documents. This will ensure all bidders understand the project time frames that are required. Ample lead time also will allow the manufacture of larger pieces first, followed by smaller ones, thus minimizing the cost of form repairs.

If the precaster is not provided with the full lead time given to the general contractor, the cost of the precast concrete job invariably rises or the project schedule must often be lengthened. It is desirable to specify that major subcontracts, including precast concrete, be let within a short, defined time period after the general contract is awarded.

Pre-bidding and awarding contracts authorizing engineering and drafting costs (subject to stated project cancellation fees) can result in both production schedule time savings and savings in production costs and are recommended. Part of this savings can be passed on to the owner directly. Pre-awarding precast concrete subcontracts also benefits the owner by decreasing the start-up time required after award of the general contract. Such pre-awarded subcontracts may then be assigned to the successful general contractor.

2.2.3 Other Forming Considerations

In addition to considering maximum form reuse, the final design should take into account ease of removal from forms. This allows the precaster to efficiently meet schedules and budgets without impacting the design aesthetics.

Optimum economy in production is attained if the panel can be separated from the mold without disassembling the mold. This is done by providing draft (slope) on the sides of all openings and edges and by eliminating or minimizing forming the panel's back face (upside in the form). Drafts are a function both of shape and production techniques (see Section 3.3.2).

Molds. The complete envelope mold is a box mold where all sides remain in place during the entire casting and stripping cycle. Figure 2.2.6 shows a generic envelope mold designed with the minimum workable drafts. A complete envelope mold is shown in Fig. 2.2.7(a) and the corresponding panel in Fig. 2.2.7(b). The quality of joints produced from such molds is shown in Fig. 2.2.7(c). Figure 2.2.8 illustrates a mold without edge draft requiring removable side and end bulkheads for stripping.

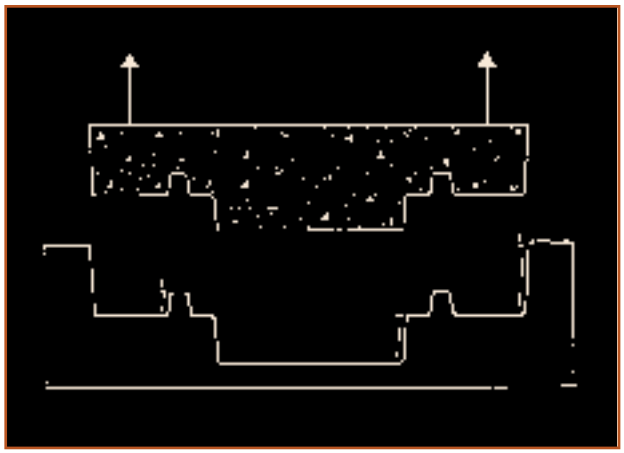

Fig. 2.2.7(a)

Fig. 2.2.7(b)

Fig. 2.2.7(c)

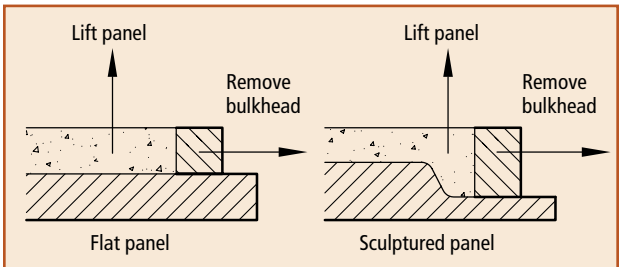

Fig. 2.2.8 Conventional molds.

The configuration of the envelope mold requires that panels be stripped flat from the mold and rotated to a vertical position later. The slightly wider joint between panels caused by the draft required on the side forms is a potential disadvantage of envelope molds.

Several modified versions of the complete envelope mold that will accommodate precast concrete units without drafts along one or more edges are illustrated in Fig. 2.2.9. Because the loose side rails or back forming are stripped with the unit, the mold allows 90 degree returns or returns with negative drafts to be cast using an envelope mold. The modified envelope molds are much easier to reassemble than loose bulkhead forms, because daily measuring and aligning of the side rails is not necessary. When properly designed, a modified envelope mold will provide the same good corner details and high-quality finish found on units cast from a complete envelope mold. Thought must be given to preventing leakage of fresh concrete paste especially where removable side or end rails attach to forms. A point of leakage can mar the finish. A return as indicated in Fig. 2.2.9(c) and (d) will cause any potential leakage to take place where it will not be seen in the finished product.

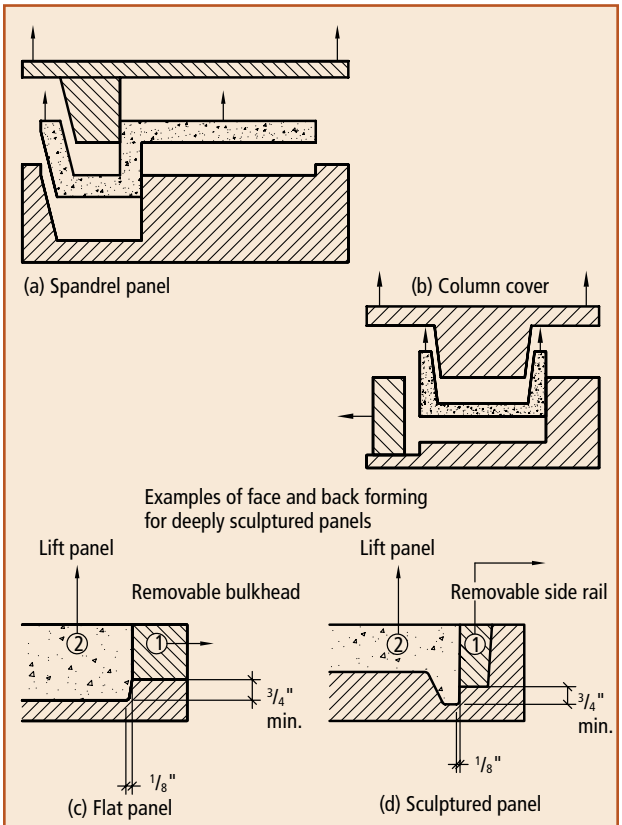

Fig. 2.2.9 Modified-envelope molds.

Architectural precast concrete units normally are cast in a horizontal or flat position with the exposed, textured, or sculptured face down to give the maximum aggregate consolidation at the panel surface. Two-sided precast concrete pieces (front and back) requiring identical appearances should be avoided, as facing aggregate will need to be seeded on the top surface resulting in likely texture variations.

Where the shape requires it, the form may be made in parts with removable sections (such as side rails and top forms) that must be assembled and disassembled with each day's concrete placement (Fig. 2.2.10[a] and [b]). This has the effect of increasing panel cost.

Fig. 2.2.10(a) An envelope mold with haunches on back.

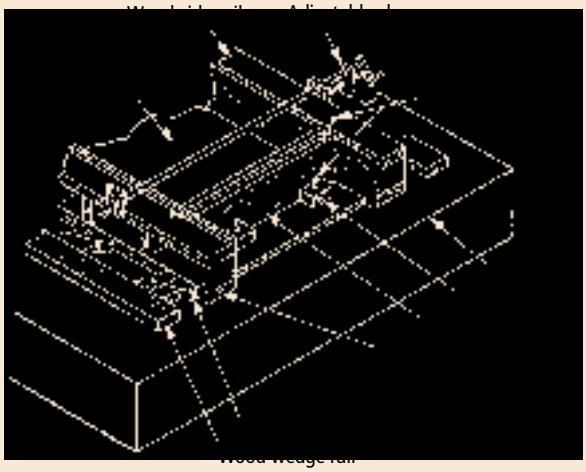

Fig. 2.2.10(b) Removable sections within a mold.

Back forming is used to create returns that give the appearance of thick, massive panels that add significant shadow features to the façade. These returns also can allow windows to be set back away from the building's face. To achieve these shapes, special forms must be constructed and then suspended over the primary mold to create the desired panel depth.

A common production method to make large returns is a two-stage concrete placement (see Section 3.3.9). The return piece is produced on Production Day 1. On Day 2, the

return piece is removed from its form and is connected to a master mold. The return is cast monolithically to the master piece. Two-stage concrete placements create a more uniform texture on all sides of the panel. A quirk should be provided in the corner so the return is not formed to a sharp edge that is easily chipped.

The details for casting individual panels should always be left to the precaster. Elevations, wall sections, and details of each different type of wall panel should be drawn by the architect. When using large elements, if the appearance of smaller panels is desired for aesthetic reasons, false joints (rustications) can be used to achieve this effect.

At times a compromise may be required between the finish and the shape of a precast concrete panel. Wherever possible, the designer should avoid fragile edge details. Chamfered or eased edges reduce edge damage and mask minor irregularities in alignment.

2.2.4 Panel Size and Panelization

Precast concrete pricing is determined primarily by the size of the pieces and repetition. Pricing is more dependent on large pieces than on a large project. For example, a 100-piece project of large panels can be less expensive per square foot (m^2) than a 1000-piece project using much smaller panels.

The reason piece size is so important is because most labor functions performed by an architectural precaster and erector are required because of the existence of a piece. The more pieces the project has, the more labor hours it will take to engineer, cast, strip, finish, load, deliver, and install the panels. Therefore, it is more economical to enclose a larger portion of the building's exterior with fewer precast concrete panels (see also Section 3.3.10).

For maximum economy, minimize the number of pieces by making them as large as possible within normal manufacturing and shipping limitations. Handling and erecting precast concrete components constitutes a significant portion of the total precast concrete expense. The cost difference in handling and erecting a large rather than a small unit is insignificant compared to the increased square footage of a large unit, Table 2.2.2. To be economical, a project's average piece size should be at least 100 to 150 ft^2 (9 to 14 m^2) and, ideally, larger than that.

There is no exact optimum panel size. Usually the optimum panel size is dictated by size and weight limitations imposed by transport (for example, weight restrictions and bridge or power line clearances), site access, or crane capacity. The panel size is also a function of the design loads and support locations for connections. Close collaboration between the designer and a precaster is required during the early stages of a building's design to determine the optimum panel size or panelization scheme. Piece sizes that require highway permits for over height, width, length, or weight generally should be avoided.

There is a balance between maximizing potential economy of the façade elements and maintaining the economy of the supporting structural system. The key is to recognize where localized loads will occur. Often the added cost of local reinforcing of the supporting structure that may be required to accommodate larger precast concrete panels will be more than offset by savings that result from erecting fewer panels.

The designer can ensure a good average piece size by spanning a full bay with spandrels, and designing multistory column covers and large wall panels. Designing larger panels, even though they may carry a hauling premium, may be the most cost efficient. For example, an office building with 30 x 30 ft (9.1 x 9.1 m) column spacing requires fewer columns and concrete panels and yields a more wide-open interior than the same building with a 20 or 25 ft (6.1 or 7.6 m) column spacing. The cost premium (if any) to haul two 30-ft-long (9.1 m) panels versus three 20-ft-long (6.1 m) panels usually can be more than overcome by cost savings in other manufacturing areas like engineering, production, and installation. The typical parking structure may have perimeter panels that are 60 ft (18.3 m) long

Panel size, ft^2	Erection cost per piece, dollar amount per ft^2			
	$500	$1000	$1500	$2000
50	10.00	20.00	30.00	40.00
100	5.00	10.00	15.00	20.00
150	3.33	6.67	10.00	13.33
200	2.50	5.00	7.50	10.00
250	2.00	4.00	6.00	8.00
300	1.67	3.33	5.00	6.67

Table 2.2.2. Effect of panel size on erection cost per square foot. (Erection costs are for illustration only.)

or more running parallel to the 60-ft-long double-tee floor system. The double tees cannot carry the perimeter panel weight. These panels must be designed to span column to column. Therefore, the added cost to haul a 60-ft-long panel is offset by the omission of a supporting structural beam.

In addition to providing cost savings during erection, larger panels provide secondary benefits by shortening a project's schedule, reducing the joints to be sealed, and requiring fewer connections. Using fewer lineal feet of joint sealant translates directly into less probability of joint sealant failure, which could allow both air and moisture infiltration into the wall cavity. Thus, large units are usuably preferable unless they lack adequate repetition or incur significant cost premiums for transporting and erecting.

If design of an elevation requires the appearance of smaller units that are not economic, the inclusion of false joints (rustications or reveals) cast into the face of larger elements can give the illusion of smaller elements and provide a solution that improves overall economy. These false joints can be caulked to match the appearance of actual panel joints to increase the illusion of small panels.

2.2.5 Material and Labor Costs and Uniformity of Appearance

Table 2.2.3 lists material factors and labor processes that affect both cost and the uniformity of appearance.

It is difficult to provide representative cost figures for different precast concrete surface finishes, because individual plants may price them somewhat differently. Some plants, for instance, consider an acid-etched surface an expensive finish, particularly if they infrequently use this method of finishing. Some precasters discourage its use, while others may prefer its use to sandblasted or retarded (exposed aggregate) finishes to obtain a similar appearance.

The cost of cement in the finished, erected product will normally vary between 3 and 6% of the total cost per square foot of wall, depending upon the concrete volume per square foot of wall and whether gray or white cement is required. The premium for white cement is not a great percentage of the overall cost, although white cement is from 2 to 2.5 times more expensive than gray. In addition to specifying white cement for color effect, the architect will also obtain better uniformity in color than is possible with gray (see Section 3.2.1).

Pigments have a small impact on the overall cost of a project. For an architectural precast concrete panel with a 3 in. (75 mm) face mix, pigments will generally add $0.10 or less per square foot for most light, earth-tone colors and $0.40 or less for intense or dark colors such as charcoal, chocolate, bright red, or orange. The exceptions are green and blue, which need to be investigated on an individual basis, because their cost may impact a project substantially.

Aggregate selection. For reasons of appearance and cost, aggregate choice is an important factor. Aggregate cost is determined primarily by the transportation charges from the quarry to the precast concrete plant. Most aggregates cost about the same to remove from the earth and to crush to the appropriate size. The trucking cost from the quarry to the plant is the principal cost variable. In order to minimize mix cost, a designer should discuss aesthetic requirements such as aggregate color options and their associated costs with a local precaster. Local aggregates, such as gravels, should not be overlooked. They will be more economical and may look very attractive with the proper matrix and finish. The cost of aggregates should be presented on the basis of both per cubic yard (m^3) and per square foot (m^2). Even the most expensive aggregates are often practical in exposed aggregate concrete, especially when they are used only in the thin face mix. For example, a 2 in.(50 mm) thick layer of face mix will use approximately 15 lb (6.8 kg) of coarse aggregate per square foot. Cost of aggregate will be approximately $0.20 per square foot for each $25 per ton of delivered aggregate cost to the precast concrete plant.

A particular aggregate's cost should be calculated only for the amount of face mix used. If a gray backup mix is used, do not calculate this material cost for pricing comparisons. Most precast concrete panels are produced with face mix thicknesses of 2 to 3 in. (50 to 75 mm) and a gray backup mix. Panels with large projections and returns will increase the face mix quantity required. Window setbacks may dictate the thickness of the face mix. As the set back increases, so does the amount of the more costly face mix. If the panel configuration is such that little or no backup concrete can be used, then the cost of the facing aggregate can have a significant effect on the cost of the panel.

Because the selection of aggregates (and, to a smaller degree, that of cement) has a substantial influence on

Table 2.2.3. Factors related to cost and perceived color uniformity.

Assumptions	Comments
General	Costs will generally decrease as panel sizes increase. The most cost effective panels are generally larger than 100 to 150 ft^2 (9 to 14 m^2). Flat panels without recessed windows can use less face mix. Panels with recessed windows, shape, or returns require more face mix. Form costs should be amortized over the number of castings that are made within the form. Always attempt to use the master mold concept.
Cement content	Gray cement is sold for structural applications. The cement manufacturers do not attempt to control the color of gray cements. They do actively try to control white cement color and brightness. Gray and white cements can be blended to achieve reasonable color uniformity at lower cost. Color uniformity normally increases as the percentage of white cement increases.
Aggregates	More- and less-expensive local aggregates sometimes are blended to reduce costs.
Pigment dosage	Lower dosages of pigments often are used to create subtle shades, but very low dosages will not yield good color consistency. High dosages are used to create strong colors. Often white cement must also be used to increase pigment effectiveness and, thus, color consistency.
Form surface	1. Often partial bands of form liners are used to create texture differences within a panel. This is generally less expensive than covering the entire form surface with a liner. Remember that a form liner is a manufactured product and often has size and module limitations that must be considered during design. 2. Smaller, less complex projections will greatly reduce the cost.
Surface finish	1. Acid-etched or lightly sandblasted surfaces should normally be created by using a white cement base for color uniformity. 2. Because of the fine, flat surface resulting from an acid-etched or light sandblast finish, the panel surface should be broken up with details or rustications to break up the surface mass. Doing so will result in a more uniform color appearance.
Mix/Finish complexity	Details must be provided at mix/finish changes within a panel in order to provide a termination line for a mix/finish change.

final cost, the architect may obtain estimates or bids with a base price corresponding to the lowest cost combination suitable for the project, and with quoted premiums for upgrading of materials. This should not, however, include more than one or two alternatives, as the interaction between the costs of the materials, finishes, shape, and production techniques may complicate evaluation of such premiums.

Precasters can modify concrete ingredients, depending on the selected finish, in order to lower material costs. For example, most acid-etched finishes will not expose the coarse aggregate. Thus, the cost of special coarse aggregates can be minimized or eliminated since they will not be seen. Since sandblasting dulls the coarse aggregates, less expensive aggregates may be selected. Local, less expensive aggregates may look very similar to expensive special aggregates after they are sandblasted. A bushhammered finish will give a similar appearance to sandblasting without dulling the aggregates. Exposed aggregate or retarded finishes tend to be more expensive because they require colorful, premium cost coarse aggregates. This procedure exposes the coarse aggregate and reveals its natural beauty.

By incorporating demarcation features, multiple mixtures can be incorporated in a single panel. A designer can also achieve different colors and textures from a single precast

concrete mixture simply by varying the finish treatment. This multiple-finish technique offers an economical yet effective way to heighten aesthetic interest.

Mix Design. It is desirable to develop the mixture proportions before the project goes out for final pricing. Most precasters are eager to assist the architect in developing a design reference sample as early as possible. The best method in selecting a sample is to visit the precast concrete plant to view a multitude of samples and finished panels stored in the yard. Alternatively, a designer can refer the precaster to a selection from the *PCI Architectural Precast Concrete – Color and Texture Selection Guide*, to an existing project, or provide a piece of natural stone (or other material) to match or refer to.

Often a required panel finish will require a new, one-of-a-kind concrete mix. When visiting a plant, the designer can select the cement color, aggregate type and size, and surface finish method/depth. Asking a precaster to make several different samples for a project is common and encouraged. Once a project's 12 x 12 in. (300 x 300 mm) sample for each color and texture has been finalized, the designer should make the sample available to all interested precast concrete bidders to view and photograph. In some cases, multiple samples are made so that each precast concrete bidder can have a sample. Listing the exact concrete ingredients in the specification is not necessary but encouraged.

Reinforcement and Connection Hardware. The cost of reinforcement is typically not a significant variable in architectural precast concrete. The amount of reinforcement is mainly determined by load requirements, such as handling, loadbearing, or other structural functions. An exception is the choice of finish of the reinforcement and connection hardware. The cost of galvanized or epoxy-coated reinforcement is substantial, and is not normally required (see Section 4.4.7). Additionally, it is not a substitute for adequate concrete cover or concrete quality.

Connection hardware cost is governed mainly by structural load requirements (including special structural functions, possible earthquake considerations and weather exposure) and the building's structural system. Hardware costs may be minimized by making the precast concrete units as large as is consistent with the size limitations discussed in Sections 3.3.10 and 4.5.3.

On structural steel buildings, preweld connection hardware can either be attached to the structure in the field or in the structural steel fabricator's facility using precasters drawings. Structural steel bracing to resist torsion of the structural frame members should be provided and installed by the structural steel fabricator.

Four lateral and two gravity connections are the minimum required for most precast concrete units, regardless of panel size. The labor cost of producing and handling small individual pieces of hardware normally exceeds the material costs, thus increasing the relative cost of hardware for small units.

On steel frame structures, gravity and lateral support brackets (for precast concrete connections) should be in the structural steel fabricator's scope of work and should be shop welded to the structural steel columns using precaster's drawings rather than field welded. It is much less expensive to shop fabricate and shop weld them than to hoist and field weld heavy support brackets. Also, the structural steel bracing to resist torsion of the structural frame members should be provided and installed by the structural steel fabricator.

2.2.6 Design Options

Design options for precast concrete panels are literally endless. Employing these options intelligently adds a great deal of design interest to a project with only minimal cost increases. The following design strategies can cost from pennies per square foot to a few dollars per square foot.

1. Incorporate multiple colors throughout a building façade.
   a. Panels can contain more than one concrete face mix.
   b. Panels can be produced with multiple finishes. The combination of finish methods will determine the cost impact.
2. Add a special shape to one distinct building area.
   a. Design an appendage to an existing form. Doing so will cost less than adding a full form, yet will create a unique building detail.
   b. Set windows back from the building's face at one or two column bays, or at certain levels.
   c. Add a few small ornate pieces at the entrance or as site walls. The small panels will be more expensive per square foot, but a few of them amortized over the entire project will add minimal additional cost.

3. Incorporate brick, tile, terra cotta, or natural stone accents into the precast concrete.

In most cases, design interest can be enhanced without increasing cost by using more complex precast concrete pieces in one area and offsetting the cost premium by economizing in another area.

2.3 TOTAL WALL ANALYSIS

The total cost of an architectural precast concrete wall may be lowered by taking full advantage of the precast concrete portion. In addition to acting as exterior walls, the precast concrete panels may perform other functions: they may be loadbearing, wall-supporting, serve as formwork or shear walls or be used as grade beams; they may be insulated or may provide the interior finish; they may serve partly or fully as containers of mechanical/electrical services; or they may combine several of these functions to become a wall sub-system. Precast concrete panels may also be cast compositely with other materials to provide an entirely different finished surface. Clay products (brick, tile, and terra cotta) and natural stones (granite, marble, limestone, and sandstone) have all been used as veneer facing.

2.4 PRECAST CONCRETE PANELS USED AS CLADDING

2.4.1 General

The use of non-loadbearing precast concrete cladding has been the most common application of architectural precast concrete. Cladding panels are those precast concrete elements that resist and transfer negligible load from other elements of the structure. Generally, they are normally used only to enclose space and are designed to resist wind, seismic forces generated from their self-weight, and forces required to transfer the weight of the panel to the support structure. Cladding units include solid wall panels, window wall units, spandrels, mullions, and column covers. Their largest dimension may be vertical or horizontal. These units generally may be removed from the wall individually without affecting the stability of other units or the structure itself. Precast concrete cladding panels can be made in a wide range of shapes and sizes. For the purpose of discussion, cladding wall units do not extend in height beyond a typical floor-to-floor dimension, so floor levels can be defined by horizontal joints. They are normally limited in width to less than or equal to the bay width of the structure. The width of the panel is usually dictated by architectural considerations or the building's structural grid design. Typical wall panel system cross-sections are shown in Fig. 2.4.1.

The use of precast concrete cladding is a practical and economical way to provide the desired architectural expression, special shapes, and uniform finishes. When used over steel columns and beams, cladding can provide the required fire-resistance rating without resorting to further protection of the steel, under certain conditions. When used over cast-in-place concrete columns and beams, it will often permit the achievement of a uniformity of finish in combination with a special architectural shape, all in the most economical manner. Cladding can be multifunctional, for example, by providing space behind for services and exterior grooves or buttons for vertical window-washing machinery.

The extent of repetition and the choice of sizes, shapes, and finishes are the major design and cost considerations for cladding units. Panel size and weight for transporting and crane capacity constitute the major dimensional (panelization) criteria. Economy in the use of precast concrete cladding is achieved by paying close attention

Fig. 2.4.1 Typical wall systems.

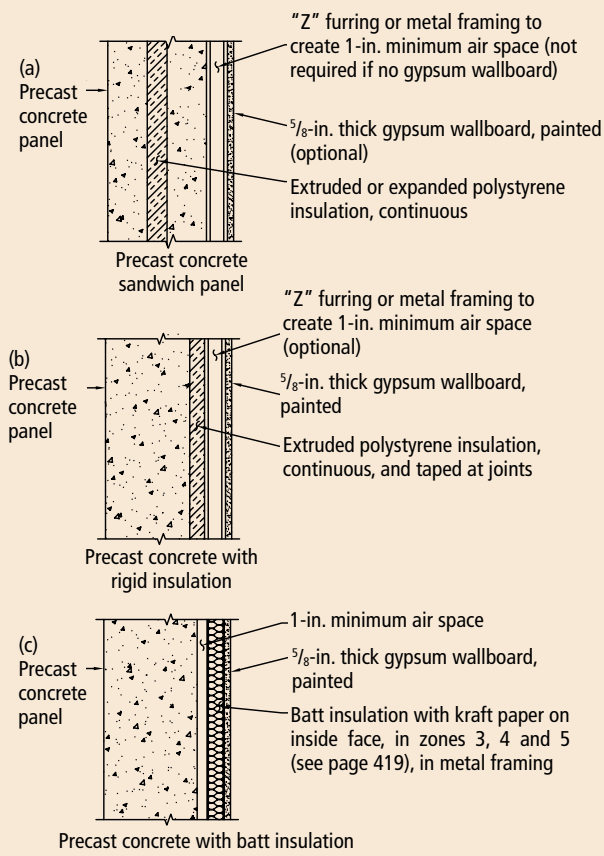

Fig. 2.4.2
Las Olas City Centre, Fort Lauderdale, Florida;
Architect: Cooper Carry Inc.; Photo; Ed Zealy.

to the design and detailing of the precast concrete units. This is a basic requirement of all precast concrete, but particularly so for units that function only as cladding.

In high-rise buildings, three characteristic façade patterns can be identified that considerably impact the panel design. The first is cladding that plates the structural framing, vertically and horizontally; the large opening then being infilled with glass (Fig. 2.4.2).

The second pattern eliminates the column covers, and the façade then becomes alternating horizontal bands of spandrel panels and glazing (Fig. 2.4.3). In this pattern, the panels and glazing are placed in front of the columns.

The third pattern is a return to the traditional façade design of rectangular window openings "punched" into a plane surface (Fig. 2.4.4[a] and [b]). This pattern originated for the requirement of loadbearing walls, that an area must be provided between glazing to carry vertical loads, and so windows were relatively small. The reappearance of this pattern derives some rationale from the needs of energy conservation that mitigates against large areas of poorly insulated glazing. Although today, more energy-efficient fenestration products allow more freedom in matching daylighting requirements with the inherent energy efficiency of the precast concrete units. A much stronger impetus comes from the dictates of architectural fashion and the desire to return to molded façades and the visual interest that can be obtained by the traditional manipulation of

Fig. 2.4.3
Nashville City Center
Nashville, Tennessee;
Architect: The Stubbins Associates Inc.;
Photo: Jonathan Hillyer.

Fig. 2.4.4(a) & (b)
Sybase Information Connect Division
Boulder, Colorado;
Architect: OZ Architecture; Photos: OZ Architecture.

voids and solids. This trend has resulted in some ingenious precast concrete configurations with the use of L- and T-shaped panels to reduce the number of cost increasing joints. These panel shapes also allow efficient erection and thus reduce installation cost. Some typical panel arrangements are shown in Fig. 2.4.5.

2.4.2 Solid Wall Panels

Solid wall panels use finish, shape, size, and repetition as the major design and cost considerations. The high level of design flexibility possible with custom wall

Fig. 2.4.5 Typical arrangement of precast concrete panels.

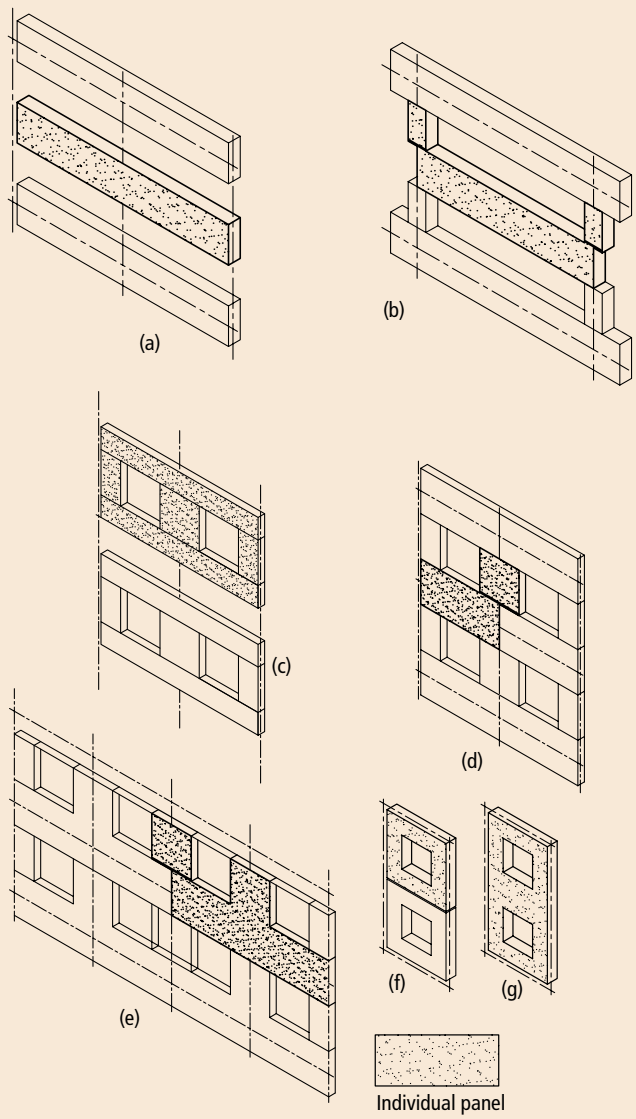

panels allows for a wide variety of architectural appearances. The precast concrete cladding in Fig. 2.4.6 was articulated by the use of horizontal and vertical rustications to reduce the scale of the massive, windowless walls of a courthouse.

2.4.3 Window Wall Panels

Window wall panels may be flat or heavily sculptured. They may contain a single opening or series of windows. They are either one story in height and made as wide as possible, or cast narrower to span vertically for two to three floors, except in high seismic areas where story drift may control design. Window openings placed within the body of the panel provide closer tolerances for window

Fig. 2.4.6
Charles Evans Whittaker Courthouse, Kansas City, Missouri; Architect: Ellerbe Becket/Abend Singleton Associated Architects; Photo: Timothy Hursley.

installation than when the window is defined by the edges of separate spandrels and mullions. The project in Fig. 2.4.7(a) and (b) uses mostly window box units that typically span column to column. The large panel size is disguised by the use of both horizontal and vertical reveals.

2.4.4 Spandrel Panels

Spandrel panels are horizontal units that separate adjacent strips of glass. They may be cast flat, have returns at the top and/or bottom, or be heavily sculpted. A designer will sometimes require that the structural frame of a building be expressed in the building's façade. In such cases, the use of precast concrete spandrel elements, made up either as a series of individual units or as one unit extending between columns with support located on the floor or on the column, is an aesthetically appropriate solution. Emphasizing the linearity or horizontality of the design (Fig. 2.4.8), white spandrel panels wrap the building at each floor interrupted at the middle by the four-story entry. The deep-ribbed spandrels in Fig. 2.4.9(a) have a unique profile that

Fig. 2.4.7(a) & (b)
116 Huntington Avenue
Boston, Massachusetts;
Architect: CBT/Childs Bertman Tseckares Inc.;
Photos: Wayne Soverns Jr.

Fig. 2.4.8
Liberty Property at Huntington Square, Miramar, Florida;
Architect: Retzsch Lanao Caycedo Architects;
Photo: RLC Architects, P.A.

Fig. 2.4.9(a) & (b)
Oak Brook Pointe Office Center
Oak Brook, Illinois;
Architect: Wright Architects Ltd.; Photo: Hedrich Blessing.

(b)

cants outward five degrees from vertical (Fig. 2.4.9[b]). Each panel has two finishes of a light gray concrete, acid-etched at the flutes and lightly sandblasted at the top, creating the look of honed and flamed salt-and-pepper granite. At the stepped end walls, the windows follow the same tilt as the spandrels, creating a continuous projection. Tilting the windows required creation of a spandrel panel that was hung on an angle. In contrast, the typical spandrel rests normally on the slab but has a canted face. These two sections join gracefully and seamlessly at each of the building's twelve corners. Special corner pieces, formed with sequential casts rather than in a V-mold, provided total continuity between elevations. The result is that the deep rib reveals are in perfect alignment along the entire perimeter of each floor.

Fig. 2.4.10(a) & (b)
901 New York Avenue Office Building; Washington, DC; Architect: Davis, Carter, Scott; Photos: Eric Taylor Photography, © Eric Taylor Photo.com.

2.4.5 Column Covers and Mullions

Column covers and mullions are usually a major focal point in a structure. These units may be broad or barely wider than the column itself and run vertically up a structure. They are often used to conceal the structural columns and may completely surround them at the ground level. Column covers are usually manufactured in single-story units and extend either from floor to floor or between spandrels; however, units two or more stories in height may be used. In order to minimize erection costs and horizontal joints, it is desirable to make mullions as long as possible, subject to limitations imposed by weight and handling. Also, in many cases it may be desirable to combine the column cover or mullion with adjacent spandrel to minimize joints.

The column covers in Fig. 2.4.10(a) and (b) are the major focal areas of the building. The buff precast concrete units were given an acid-etched finish. In Fig. 2.4.11, the precast concrete units are used as beam and column covers in the interior to visually integrate the exterior and the atrium. In Fig. 2.4.12, the precast

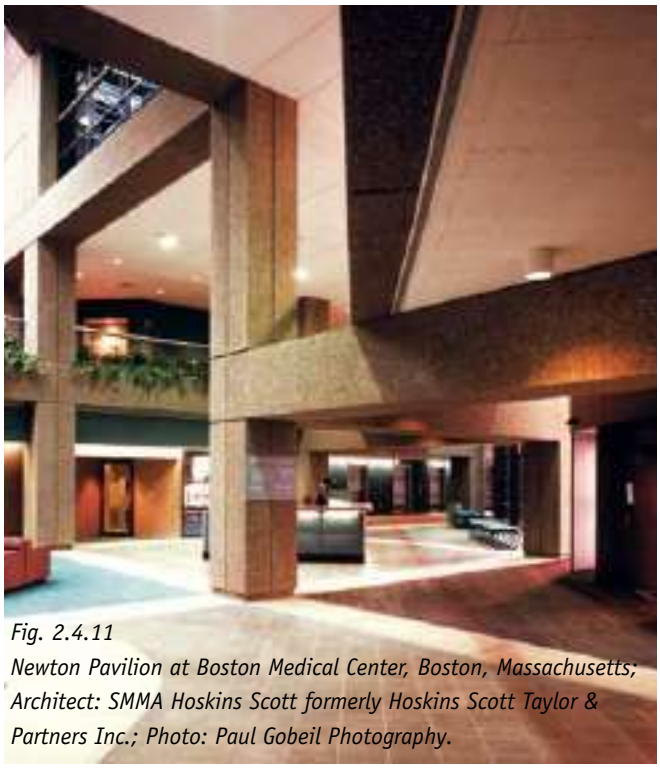

Fig. 2.4.11
Newton Pavilion at Boston Medical Center, Boston, Massachusetts; Architect: SMMA Hoskins Scott formerly Hoskins Scott Taylor & Partners Inc.; Photo: Paul Gobeil Photography.

Fig. 2.4.12
Palisades Office Complex
Atlanta, Georgia;
Architect: Cooper Carry and Associates;
Photo: Cooper Carry Inc.

concrete column covers provide an appealing accent to the entrance. In Fig. 2.4.13, the precast concrete mullions spaced 5 ft (1.5 m) on center lend verticality to the 20-story tower surfaces and emphasize the desired delicacy of scale and finish.

2.4.6 Wall-Supporting Units

Wall-supporting units are precast concrete cladding units that support a portion of the wall, but carry no loads from floors or roof slabs. These units cannot be removed from a wall without affecting the stability of other units and are normally designed so that their largest dimension is vertical, although they may be horizontal.

Where possible, the lower two to three stories of panels should be "stacked" to support the wall above

Fig. 2.4.13
Eagle Gate Plaza & Office Towers
Salt Lake City, Utah;
Architect: Cooper Carlson Duy Ritchie, Inc.;
Photo: Rodriguez & Associates, LC.

them up to the roof level, or any portion of this height, and supported directly on the foundation wall to eliminate load support connections and speed erection (Fig. 2.4.14). These units may be quite slender and support considerable wall height if they can be tied into the structure as required for lateral stability. Panels have been successfully stacked higher than three stories, but these cases require engineering considerations regarding the impact of thermal movements, lateral building drift, and structure deflections.

Wall-supporting units can be made in one piece through several stories. The building frame carries only lateral loads from the precast concrete panels, as all axial loads from the wall panels, are supported by the foundation. This reduces the need for larger steel members around the perimeter of the building, resulting in a more economical steel superstructure. The weight of a group of stacked units should all be carried by a single designated floor. Erection techniques to accommodate predetermined partial load distribution between floors are not economically feasible. It has proven to be impractical to support adjacent units on alternate floors. The recommended practice is that a specific floor be designated and designed to take the load of all precast concrete units passing it.

Wall-supporting units may answer a particular design consideration for structures where the exterior columns are set back from the edge of the floor slab. A cantilevered floor will deflect to a certain degree over a period of time due to the weight of the wall units. By using stacked units for this condition, the designer can respond to this consideration.

The art institute in Fig. 2.4.15 is a four-story, stack-loaded cladding project with a very pronounced profile. The cladding consists of a 6 in. (150 mm) thick precast concrete panel with 2 in. (50 mm) of German limestone. There is 60,000 ft^2 (5600 m^2) of cladding with a 2 ft (0.6 m) return. This profile would have made the connection system very complex if the panels were individually gravity-load-supported in lieu of stackloaded. The simplicity of the stacked system allowed the use of a slotted insert and strap type tieback connection throughout.

Precast concrete units designed to carry their own weight over a considerable width are also considered wall-supporting units. This width may be equal to the column spacing for the exterior wall or a multiple thereof. Where such units are bearing at, or in close proximity to, the columns, edge beams may be eliminated. If edge beams are needed for other structural reasons they may afford savings in size and/or reinforcement in the panels. Because of size or weight limitations, such units are normally made only one story high so that the width is the largest dimension. When the panel spans across several columns, the potential for deflection (or rotation) of the edge beams caused by the

Fig. 2.4.14(a) & (b) Stacked and individually supported panels.

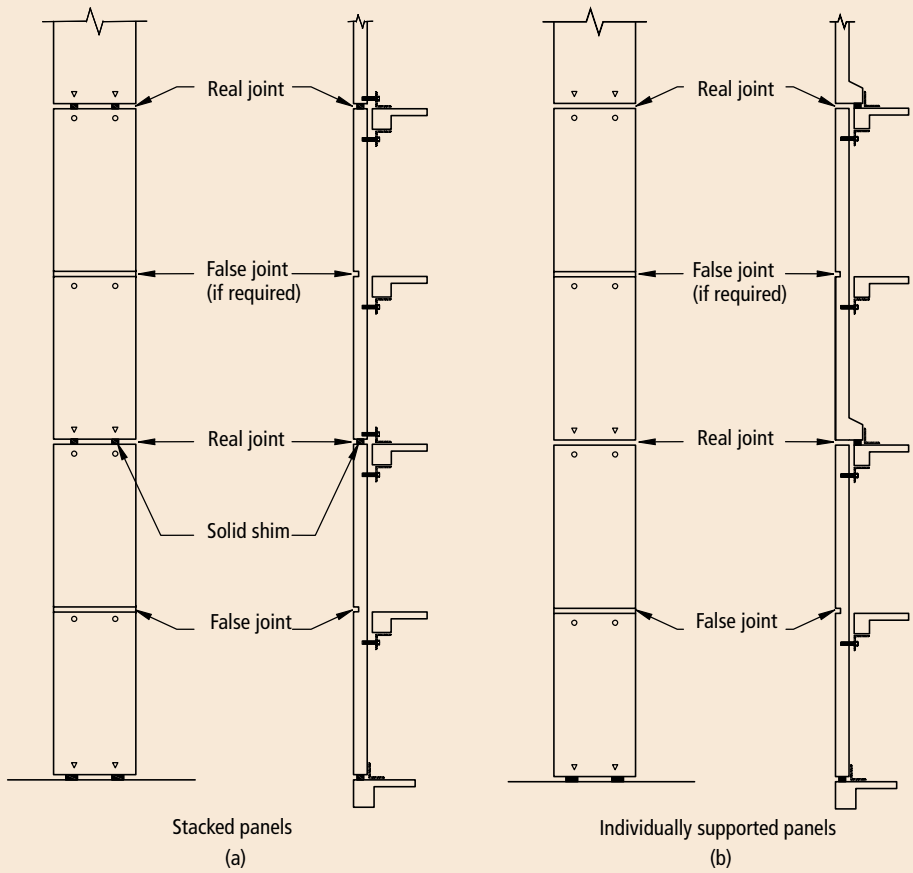

wall, any long term deflection in the unit will normally have taken place by the time of erection.

The Phillies wanted the exterior of its ballpark to be consistent with the city's dominant architectural elements, so brick was the natural choice for the cladding. To meet the budget and schedule, the design and construction teams used architectural precast concrete with inset brick (Fig. 2.4.16). The precast concrete panels were designed to be self-supporting elements, along the ramps and at the arcades at the south and west faces of the office buildings (along the pedestrian entrances). The piers that frame the arcade were shipped as U-shaped column sections and support the weight of the infill spandrel panels located above the windows and arcade openings. This reduced the amount of weight to be supported by the steel structure and weight of wall units is reduced. Where several units are carried by one beam, resulting deflection may create tapered joints and the possible touching of units at their tops. Designing the panel to span the distance between the columns with one unit provides a deep beam and, consequently, much less deflection. By storing and supporting such units in a way similar to their ultimate position in the

Fig. 2.4.15
Target Wing – Minneapolis Institute of Arts
Minneapolis, Minnesota;
Architect: RSP Architects.

Fig. 2.4.16
Phillies Ballpark
Philadelphia, Pennsylvania;
Architect: HOK Sports Facilities Group, LLC; Ewing Cole/Cherry Brott, joint venture.

Fig. 2.4.17
Franklin High-Tech Center, Franklin Township, New Jersey; Architect: Herbert Beckhard Frank Richlan & Associates; and Brandt-Kuybida, joint venture; Photo: O. Baitz Inc. Photography of Architecture.

eliminated the need for supplemental steel members to support and brace hand-laid masonry. These panels were constructed with articulations, brick patterns, and granite accent bands that hark back to older ballparks and complement the city's architecture.

The five buildings of the industrial/office complex in Fig. 2.4.17 have strongly horizontal, acid-etched, light gray, ribbed precast concrete panels. The majority of the panels are 8 ft (2.4 m) high, 20 ft (6.1 m) wide, and 8 in. (200 mm) thick. The ribs provide the necessary structural stiffening, making the panels self-supporting and stackable. By stacking each panel on the panel below, the gravity loads from the panels are carried directly to the foundation and do not introduce additional load to the superstructure. The ribs also act as stiffeners for the stresses during handling and erection.

Having a self-supporting (stacked) precast concrete system saved engineering time and helped meet a very tight schedule (Fig. 2.4.18). The project had over 1100 panels and 113,000 ft^2 (10,500 m^2) of 6 in. (150 mm) thick cladding. A gray color was used with four differ-

Fig. 2.4.18
Minnesota Department of Revenue Building St. Paul, Minnesota; Architect: HGA Architects and Engineers.

Fig. 2.4.19(a), (b) & (c) Four Gateway Plaza Colorado Springs, Colorado; Architect: DCA Architects.

ent finishes. Additionally, buff-colored precast concrete inlays accent the gray.

The three-story structural steel office building in Fig. 2.4.19(a) is supported on the exterior by low profile precast concrete spandrels and column units that allow for large windows offering views of Pike's Peak. The walls are stackable and the precast concrete was erected in two phases (Fig. 2.4.19[b]). The two-story exterior walls and spandrels were erected first and braced to the first-floor steel structure. Then the second-floor steel was placed on the walls and spandrels. After the topping was placed and cured on the second floor, the third-floor columns and spandrels were erected and the braced to the second floor. The architectural walls and spandrels consist of a two-color, acid-etched finish with a form liner used to create a chiseled stone band, while reveals give a human scale to the project (Fig. 2.4.19[c]).

2.5 LOADBEARING WALL PANELS OR SPANDRELS

2.5.1 General

Loadbearing façades have both an aesthetic and a structural function. In building practice, the most economical application of architectural precast concrete is as loadbearing structural elements. Loadbearing units become an integral part of the structure, taking the vertical and horizontal floor and roof loads and/or transferring horizontal loads into shear walls or service cores. Such an arrangement can be economical, not only from a structural design standpoint, but also from the viewpoint of overall construction. In some cases, the loadbearing elements also can contribute to the horizontal stability of the building. Each loadbearing element plays an essential role in the structural integrity or stability of the building.

Architectural precast concrete cladding is noted for its diversity of expression, as well as its desirable thermal, acoustic, and fire-resistant properties. Commonly overlooked is the fact that concrete elements normally used for cladding applications, such as solid wall panels, window wall, or spandrel panels, have considerable inherent structural capabilities.

In the case of low- or mid-rise structures, the amount of reinforcement required to handle and erect a precast concrete component is often more than that necessary for carrying design imposed loads. Thus, with relatively few modifications, many cladding panels can function as loadbearing members. For taller buildings, additional reinforcement may be necessary for lower-level panels.

The slight increases in loadbearing wall panel cost (due to reinforcement and connection requirements) can usually be more than offset by the elimination of a separate perimeter structural frame. Depending upon the application, the loadbearing panels also may reduce or eliminate a structural core or interior shear walls, particularly in buildings with a large ratio of wall-to-floor area. The increase in interior floor space gained by eliminating columns can be substantial and, depending on the floor plan, partition layout flexibility can be enhanced. Also, unlike a steel frame, a loadbearing precast concrete system eliminates the need for cementitious fireproofing and the associated costs and schedule impact of tenting and temporary heat required for applicaton and curing of fireproofing material.

Structural Depth. One of the perceived disadvantages of a loadbearing precast concrete system, compared to a steel structure, is the potential larger structural depth required for a given span and the resulting increase in floor-to-floor height. Taller floors increase the amount of exterior wall area required to enclose a given floor plate, which translates directly into increased construction costs for a structure's skin. However, an understanding by the designer of the scope of such increases and strategies to minimize their impact through efficient floor plate design can mitigate this disadvantage.

A typical floor-to-floor dimension for a 45 ft (13.7 m) clear-span steel structure with an 18-in.-wide (460 mm) flange beam averages about 13 ft 4 in. (4 m). This distance accounts for a 9 ft (2.7 m) finished ceiling height

Fig. 2.5.1 Exterior wall-to-floor ratio.

Building	Number of Floors	Floor Plate Area	Perimeter Wall / Floor Area	Gross Area	Net Area	Net Area / Gross Area	Corridor Area	Walking Distance	
								Corner to Core	Diagonal
A	4	40,000	0.32	160,000	150,200	93.40%	5900	225	430
B	4	41,300	0.34	165,400	165,400	94.00%	7200	255	510
C	4	40,100	0.32	160,600	160,600	95.00%	5700	235	455
D	4	39,300	0.33	159,200	159,200	95.00%	7200	175	330
E	4	40,000	0.32	160,000	154,300	96.00%	5700	180	330
F	2	80,500	0.27	161,000	155,300	96.50%	7900	330	620
G	3	52,100	0.29	156,400	149,000	95.50%	9000	250	400
H	4	40,000	0.31	160,100	152,500	95.30%	9200	270	315
I	4	39,900	0.33	156,800	147,700	94.20%	5100	170	240

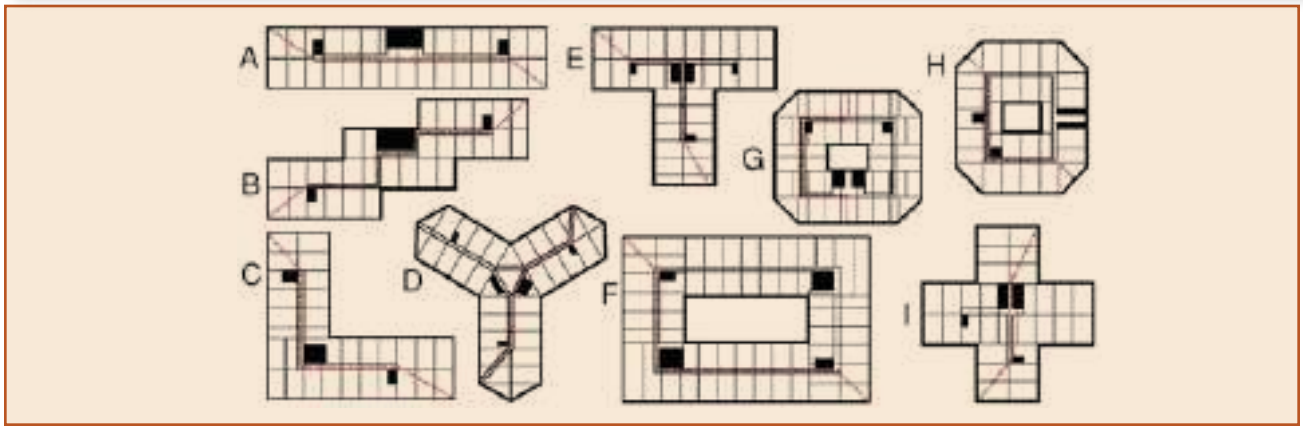

Fig. 2.5.2 Schedule for loadbearing precast concrete project.

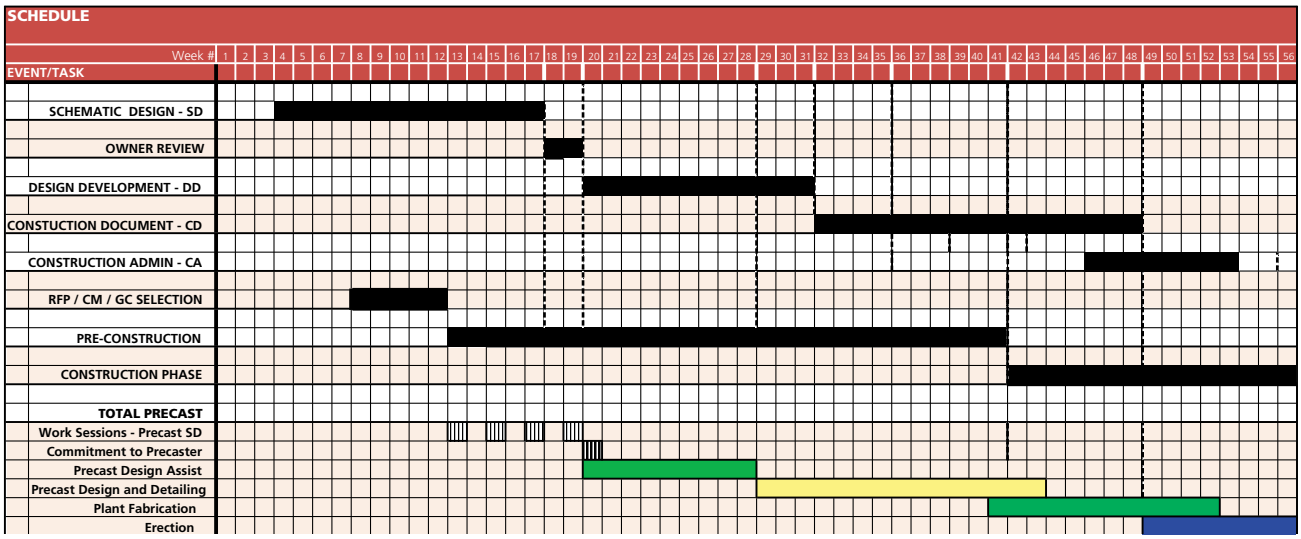

Note: Schedule durations are for illustration only.

and the required clearances for fireproofing, lighting, and ductwork. For a similar span in a loadbearing precast concrete system using 24-in.-deep (0.6 m) double tees, the required floor-to-floor dimension is 14 ft 0 in. (4.3 m).

The extra 8 in. (200 mm) of exterior wall required for a mid- to high-rise structure represents a 5% increase in wall area over the steel system. But that increase must be put into perspective with other aspects of the design, especially floor-plate geometry and floor vibration.

In some areas of the country 20 in. (500 mm) deep double tees are used for a 45 ft (13.7 m) span, while steel designers may use, a 24 in. (600 mm) wide flange beam ito minimize floor vibrations. Precast concrete has a much stiffer floor system than steel. When this construction configuration is used the floor-to-floor dimensional difference between precast concrete and steel is eliminated.

Exterior Wall-to-Floor Ratio. An important consideration when determining the efficiency of a particular structure is the ratio of exterior wall to floor area. The lower this ratio, the more efficiently a particular floor plan shape encloses interior space and reduces the required amount of exterior wall.

As we know, a circular shape provides the most efficient perimeter defining a given area. Floor plan shapes that most closely resemble a circle (such as a square as opposed to long and thin rectangles, T-or L shapes) offer better floor-to-wall area ratios. Also, for buildings of a given total square footage those that have fewer floors have better wall to floor area ratios than those that have more floors. The difference between these building shapes with varying numbers of floors for a program of 160,000 ft^2 (14,860 m^2) is shown in Fig. 2.5.1, and it amounts to a 26% swing in the wall area required to enclose identical areas.

The lesson to be learned from this is that floor-plate geometry and building height have much more of an impact on exterior wall area than a potential 5% penalty due to the increased floor-to-floor height required for a total precast concrete system.

To realize the full potential of loadbearing unit usage with no sacrifice in aesthetic advantages, both the engineer of record and precast design engineer should be involved from the initial concept stage of the project. Considerations should include the load effects on member dimensions, coordination of temporary bracing, connections, and erection sequencing.

To take maximum advantage of loadbearing and wall-supporting units, the decisions as to their functions should be made before structural design of the building frame has progressed to a stage where revisions become costly for a given project schedule. An earlier award of the precast concrete contract will be necessary when using loadbearing units than for non-loadbearing façades (Fig. 2.5.2). Cost savings tend to be greatest in low- to mid-rise structures of three to ten stories. As with all precast concrete applications, further economies can be realized if the panels are repetitive. Besides minimizing the number of molds necessary, repetitive panel designs enable repetitive connections.

The use of a loadbearing precast concrete system can

(a)

(b)

Fig. 2.5.3(a) & (b)
NBSC Headquarters Building
Greenville, South Carolina;
Architect: Neal + Prince & Partners;
Photo: (a) Fred Martin Jr./Fred Martin Photography Inc.

trim two-and-a-half to three months off the typical construction schedule for a mid-sized, 100,000 ft^2 (9300 m^2) structure. An example of the speed of construction is shown for the office building in Fig. 2.5.3(a). The erection phase of this four-story, 75,000 ft^2 (7000 m^2) Class A office building was completed in 44 days (Fig. 2.5.3[b] and [c]. The project incorporates many precast concrete components from exterior bearing walls with integrally cast thin brick, columns, inverted tee beams, double-tee floor and roof members, and interior shear walls.

Architectural loadbearing panels can be used effectively to renovate and rehabilitate old deteriorated structures. These panels can be used not only in all precast concrete structures but also in structural steel-framed structures and cast-in-place concrete structures.

Design guidance for using loadbearing architectural precast concrete wall panels can be found in Sections 4.2.5 and 4.2.7, as well as the *PCI Design Handbook – Precast and Prestressed Concrete*, MNL-120.

Fig. 2.5.3(c) Construction sequence.

Precast Day 1 — Foundations ready, first piece arrives.

Precast Day 7 — Building begins taking shape.

Precast Day 15 — Interior shear walls.

Precast Day 25 — Shear structure.

Precast Day 37 — Nearing completion.

Precast Day 44 — Structurally and architecturally completed.

2.5.2 Shapes and Sizes

Architectural loadbearing components can be provided in a variety of custom-designed or standard section shapes. A wall system can be comprised of flat or curved panels (solid or insulated) (Figs. 2.5.4[a] and [e]), window or mullion panels (Figs. 2.5.4[b] and [c]), or ribbed panels (Fig. 2.5.4[d]). Each type of panel will readily accommodate openings for doors and windows. Figures 2.5.4(b), (c), and (d) illustrate various types of ribbed panels. The panel shown in Fig. 2.5.4(c) is a horizontal Vierendeel truss window mullion panel, while the other panels are vertical window mullion panels. Figure 2.5.4(e) shows an exterior horizontal spandrel that would be used as part of a column-wall system.

In the interest of both economy and function, precast concrete panels should be as large as practical, while considering production efficiency and transportation and erection limitations. By making panels as large as possible, numerous economies are realized: the number of panels needed is reduced, fewer joints (waterproofing requirements) and connections are required, and the erection cost is lower.

Panels may be designed for use in either vertical or horizontal positions. For low-rise buildings, complex connection details can be minimized by spanning loadbearing panels vertically through several stories; consequently, the economic advantages of loadbearing wall panels are increased. For high-rise buildings, it is normally more practical to work with single-story horizontal panels connected at each floor level. The elements can be more slender, simplifying the erection.

The 16-story, 249,000 ft^2 (23,200 m^2) office building is topped out at 248 ft (75.6 m) above grade (Fig. 2.5.5[a]). It has single-story, horizontal loadbearing panels that are typically 14 ft 6 in. x 16 ft (4.4 x 4.9 m) by 8 in. (200 mm) thick. Vertical load transfer at the exterior of the building was accomplished by spanning from the building core to the exterior walls horizontally to monolithically cast 13 x 30 in. (330 x 760 mm) column elements

Fig. 2.5.5(a) & (b)
United Bank Tower, Colorado Springs, Colorado;
Architect: Klipp Partnership, P.C.

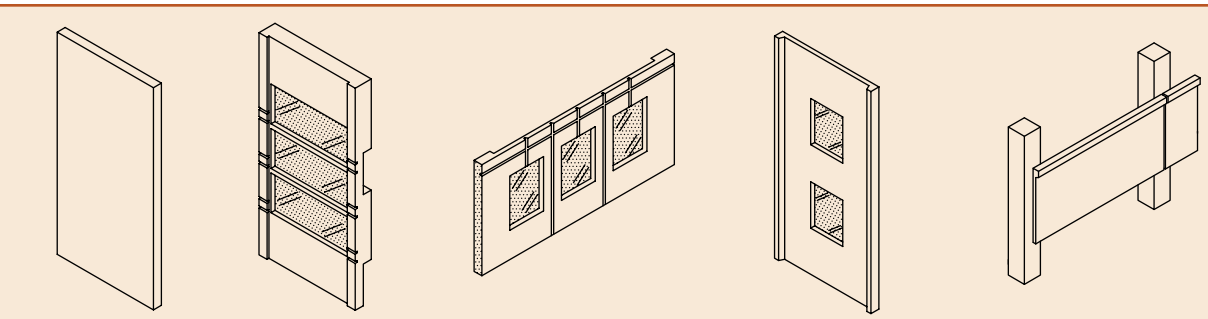

(a) Flat or insulated panel
(b) Vertical window or mullion panel
(c) Horizontal window or mullion panel
(d) Ribbed panel
(e) Horizontal spandrel as part of a column-wall system

Fig. 2.5.4 Various types of architectural loadbearing wall panels.

(b) Column free interior.

within the wall panels. The monolithic columns reduced the number of components to be erected and the subsequent connections. Also, 11 x 15.5 in. (280 x 390 mm) precast concrete mullions, integral with the panels, allowed incorporation of four windows in each panel. A column free interior allows for flexible use of office space (Fig. 2.5.5[b]).

The maximum panel size that can be transported is impacted by local conditions, such as bridge and overhead utility clearances, site access, and regulatory agencies such as State and Federal Departments of Transportation. In general, a panel up to 12 ft (3.7 m) tall and 30 ft (9.1 m) long is a manageable size; although, multistory panels 45 ft (13.7 m) in height have been fabricated and delivered. Panels should be designed in specific widths to suit the building's modular planning. When such a building is designed to take the best advantage of modularity, the economic advantages of loadbearing wall panels are significantly increased.

Load uniformity is one of the important advantages for high-rise, loadbearing panel structures. This approach can produce evenly distributed loads on the perimeter foundations and reduces the tendency for differential settlement. The jointed nature of the façade also makes it more tolerant of any differential settlement that may occur.

Curves are easily created with precast concrete. On curved panels, a continuous supporting ledge cast on the inside face is preferred to provide bearing for floor and roof members and to stiffen the panels to minimize warping. Figure 2.5.6 shows the skeleton of various components at the right, and an ever-more finished look of the structure to the left. At far left is how the finished structure will appear.

Flat and curved molds, each 13 ft (4.0 m) high and 30 ft (9.1 m) wide, produced the loadbearing panels for the eight-story office building in Fig. 2.5.7(a).

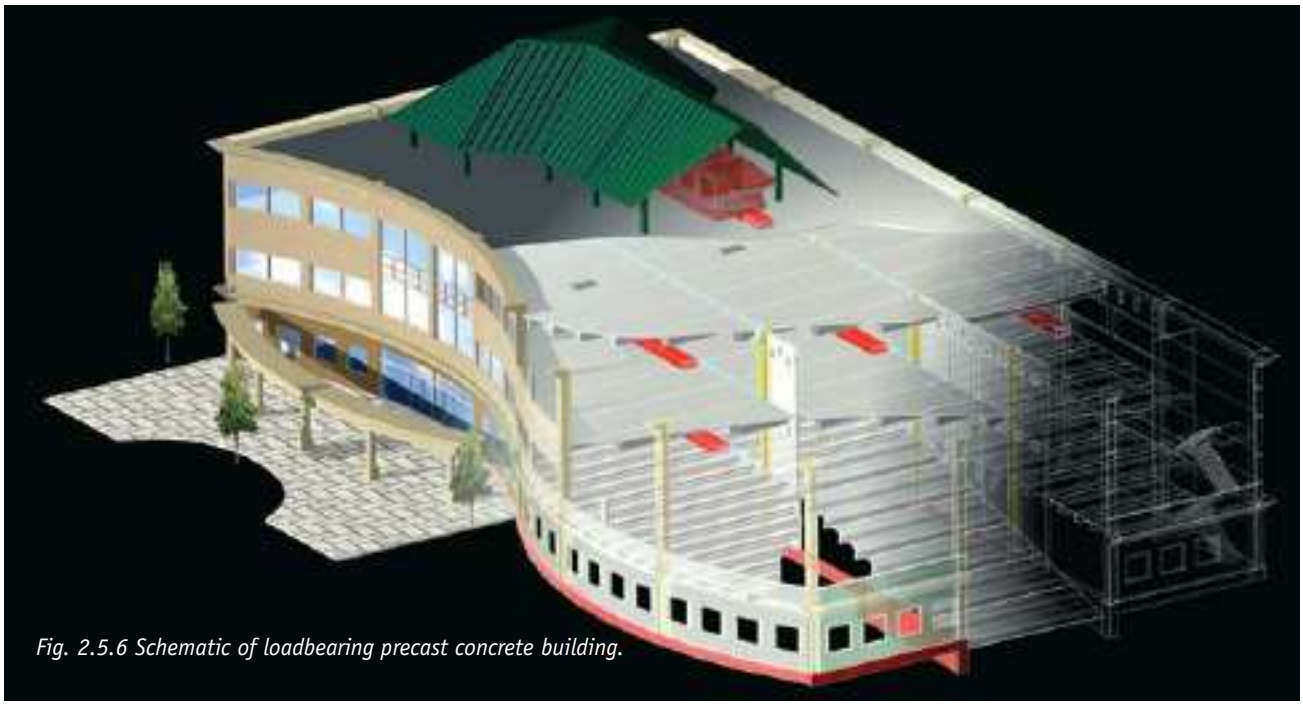

Fig. 2.5.6 Schematic of loadbearing precast concrete building.

Individual, non-repetitive stone textures comprise the horizontal moldings that encircle the building at every level. To produce these textures, the architects chose stone from a local quarry and worked with stone cutters to develop 70 different profiles. A urethane mold was then fabricated from each stone. The flexible urethane casts of the individually chiseled limestone blocks were then placed within the larger panel molds in a variety of patterns, adding depth, detail, and a non-repetitive quality. The process of casting a highly articulated, buff-colored, stone-textured loadbearing wall solved structural and cost constraints and avoided the process of attaching the stone to the precast concrete panels (Fig. 2.5.7[b]).

Fig. 2.5.7(a) & (b)
198 Inverness Drive West
Englewood, Colorado;
Architect: Pouw & Associates, Inc.;
Photos: Pouw & Associates, Inc.

Wall panel size and shape can be affected by the details and locations of the vertical and horizontal panel-to-panel connections. Gravity load transfer between panels, gravity and axial load combinations caused by lateral loadings, or size of window openings can become major factors influencing panel structural dimensions and connection design. For most precast concrete

exterior bearing wall structures, the gravity dead and live load condition will control structural dimensions.

When stemmed floor members, such as double tees, are used, the width of loadbearing walls or spandrels should module with the double-tee width. For example, for 12 ft (3.6 m) double tees, walls should be 12, 24, or 36 ft (3.7, 7.3, or 11 m) wide. Local precast concrete producers should be contacted to determine their particular module.

Inverted tee beams typically are used on interior spans. To minimize floor-to-floor dimensions, double tees are frequently dapped at interior beam lines and at exterior spandrels. Dapping is generally not necessary on vertical wall panels.

2.5.3 Design Considerations

(See Sections 4.2.5 and 4.2.7 also)

In recent years, tremendous advances have been made in precast concrete structural engineering technology. Greater knowledge regarding connections and wall panel design has made it possible to use architectural loadbearing precast concrete wall panels more cost effectively. Solid panels, or panels with small openings, constitute true bearing walls because they are primarily stressed in compression. With solid flat panels, load path locations can be determined easily.

As openings in the wall become larger, loadbearing concrete panels may approach frames in appearance and the concentration of load in the narrower vertical sections increases. In multistory structures this load accumulates, generally requiring reinforcement of the wall section as a column (at panel ends and at mullions between windows) designed for biaxial bending due to load eccentricities.

Loadbearing panels and shear walls, generally, will be supported continuously along their lower surface. Continuous footings, isolated piers, and grade beams or transfer girders may support them. Lower floors can be framed with beams and columns, to allow for more open space on these levels, while the structural system on the upper floors can consist of bearing walls.

When this is done, careful attention must be paid to the effective transfer of the lateral forces to the foundation. As with a vertical irregularity in any building in a seismic zone, the structural engineer should make a careful assessment of the behavior and detailing. In multistory bearing walls, design forces are transmitted through tension connections and high-strength grout in horizontal joints.

As in all precast concrete construction, the transfer of vertical load from element to element is a major consideration. Differences in section shape, architectural feature, and unit stress result in a variety of solutions and types of connections.

Depending on wall section and foundation conditions, a loadbearing wall panel can be fixed at the base (shear walls for lateral forces) with the roof elements freely supported on the panel. Alternately, depending on the shape of the building, wall element flexural stresses can be reduced by providing pin connections at the foundation and shear wall bracings at the ends or across the building to ensure lateral stability.

Loadbearing or shear wall units should be the primary design consideration if one or more of the following three conditions exist:

1. There is inherent structural capability of the units due to either their configuration or to sufficient panel thickness. The sculptural configuration of units often enables them to carry vertical loads with only a slight increase in reinforcement. For example, the precast concrete units may have ribs or projections that enable them to function as column elements for the structure. Ribs may be part of the architectural expression or, where flat exposed surfaces are required, may be added to the back of panels for additional stiffness. Projections do not have to be continuous or straight, as long as no weak point is created within the units. Generally, there is little cost premium for sculptured panels when there is adequate repetition. Similarly, some flat panels (including sandwich wall panels) may be sufficiently thick to carry loads with only minor increases in reinforcement. Structural design of panels with insulation between layers of concrete (sandwich panels) usually ignores the loadbearing capacity of the nonbearing wythe, unless designed as composite panels. If possible, the structural wythe of a sandwich wall panel should be kept on the temperature-stabilized side of the building to reduce thermal stresses due to temperature variation.

2. A uniform structural layout of the building facilitates favorable distribution of lateral forces from wind or earthquake loads. Plus, this uniformity lends itself to repetitive, economic castings (Fig. 2.5.8). This concept is difficult to employ if the load paths are continually

changing from floor to floor. Cast-in-place topping on precast concrete floor units enables the floors to act as diaphragms, distributing lateral forces and reducing both individual wall unit and connection loads.

3. The building has a central core or bay designed to resist lateral forces and transfer them to the foundation (Fig. 2.5.9). When the core creates a torsional irregularity, it should be supplemented with other lateral–force resisting elements either in the interior or on the exterior. Plan irregularities created by the extended wings of a C or Z shape, are particularly problematic in moderate or high seismic risk areas. Because the core or bay provides structural rigidity, panel-to-floor connections can

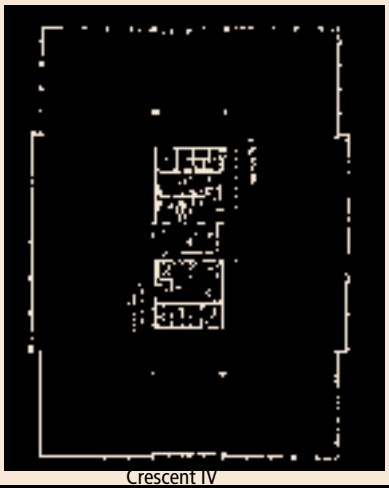

Crescent IV

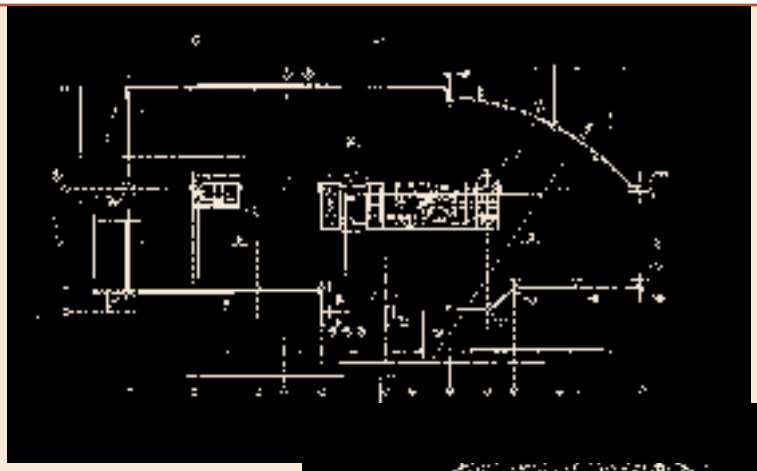

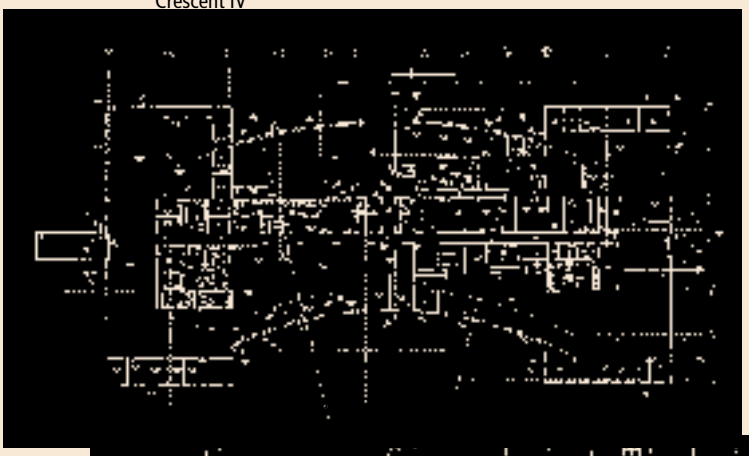

S

Fig.

remain relatively simple. A typical building core may contain an elevator lobby, elevators, stairways, mechanical and electrical equipment, and space for air ducts. While the core is being erected or cast, the precaster can proceed with the fabrication of the exterior wall units and install them as the shear wall or core is being constructed, often saving construction time.

Loadbearing wall panels used to construct the building core are connected after erection to form composite T-, L-, U-, or boxed-shaped sections in plans. The main advantages of precast concrete cores versus cast-in-place cores are surface finish quality, faster construction, and greater flexibility of the precast concrete erection sequencing.

Loadbearing spandrel panels are essentially perimeter beams that may extend both above and below the floor surface, and which transfer vertical loads from the floor or roof to the columns. Loadbearing spandrels are either ledged, pocketed, or have individual or button haunches (also known as spot corbels) to support floor and/or roof members. Steel shapes and plates may be cast into the panels to reduce haunch height and, therefore, floor-to-floor height. Non-loadbearing (closure) spandrel panels may have much the same cross-section as loadbearing spandrels without ledges, pockets, or haunches.

Precast concrete building elements are commonly reinforced with welded wire reinforcement, mild steel reinforcement, or prestressing steel. Unless analysis or experience indicates otherwise, both loadbearing and non-loadbearing panels should be reinforced with the amount of steel reinforcement specified in the appropriate building code.

Lateral loads applied perpendicular to the wall are the result of wind or seismic forces, and are usually transmitted to vertical stiffening cores, shear walls, structural frames, or other stabilizing components by roof and floor members acting as horizontal diaphragms. This reduces the load on individual wall units and their connections (Fig. 2.5.10). The connections between façade elements and floor members are normally designed as hinges in the direction perpendicular to their plane.

Vertical continuity is achieved by providing connections at horizontal joints of vertical members. Columns should be braced at each level through a continuous load path to the diaphragm.

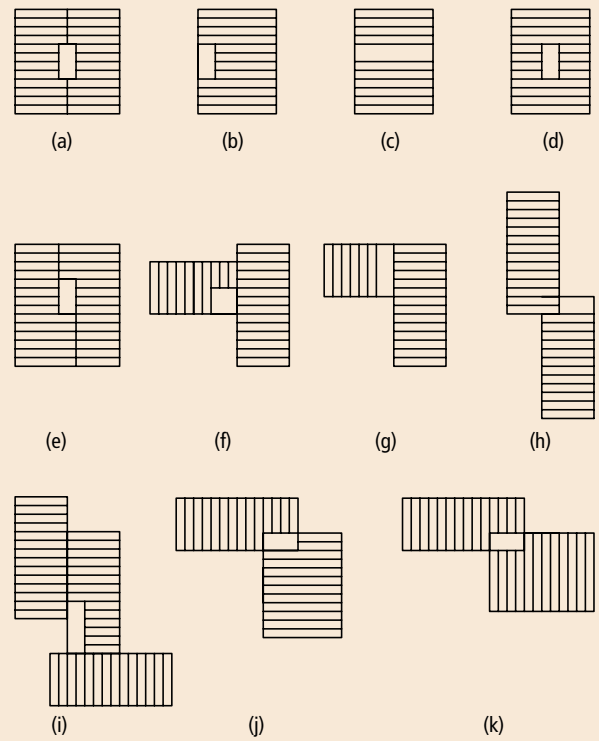

Fig. 2.5.9 Plan view of possible locations of vertical cores with respect to loadbearing walls. (Note: Although the building core is an important element of the lateral force resisting system, it may be insufficient to handle the torsional effects of eccentrically applied loads in some of these plans. Also some plans have re-entrant corners that create plan irregularties.)

The all–precast concrete structure with architectural precast concrete loadbearing wall panels and precast concrete core walls, beams, and double tees provided the neoclassic look of traditional ma-

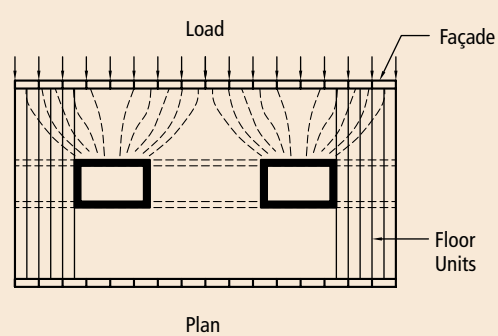

Fig. 2.5.10 Principle of diaphragm action in precast concrete floors and roofs.

Fig. 2.5.11(a), (b) & (c)
Aurora Municipal Center
Aurora, Colorado;
Architect: Barber Architecture;
Photo: (a) Michael Peck.

sonry used by many historic city halls (Fig. 2.5.11[a]). Two five-story office wings feature acid-etched precast concrete panels with punched windows and deep reveals. The building's wings are connected by a central, six-story curving section to provide a 56,000 ft^2 (5200 m^2) floor plate(Fig. 2.5.11[b]). The massive architectural columns and spandrels at the second level support all the loadbearing, two-story architectural walls above. Three cranes working simultaneously erected the building as separate sections or "towers" because of an accelerated schedule—this allowed 55 pieces to be erected in a single day (Fig. 2.5.11[c]). The result was significant schedule advantages over a steel frame structure with brick or stone cladding.

The 20,000 ft^2 (1900 m^2) bank building integrates structural clarity with the classical form of traditional bank architecture (Fig. 2.5.12[a]). The building is rendered in modular loadbearing precast concrete panels. The main body of the building is constructed of 18 typical bays, each 15 ft (4.6 m) wide and 30 ft (9.1 m) high. Two loadbearing column components and one spanning arch element comprise each of these typical bays (Fig. 2.5.12[b]). The entry drum is comprised of five bays, each 19 ft (5.8 m) wide, constructed in a similar manner.

A modern interpretation of a neo-classical Mediterranean style, the mixed-use structure in Fig. 2.5.13(a) combines retail on the first floor with four floors of parking above. The remaining four floors consist of office spaces and luxury condominiums. Floridian colors helped to anchor the project to its locale. The structural concept was originally designed

Fig. 2.5.12(a) & (b)
Park National Bank, Mt. Prospect, Illinois;
Architect: Cordogan, Clark & Associates;
Photos: Cordogan, Clark & Associates.

Fig. 2.5.13(a) & (b)
The Metropolitan
Jacksonville, Florida;
Architect: KBJ Architects Inc.;
Photos: Brian Griffis.

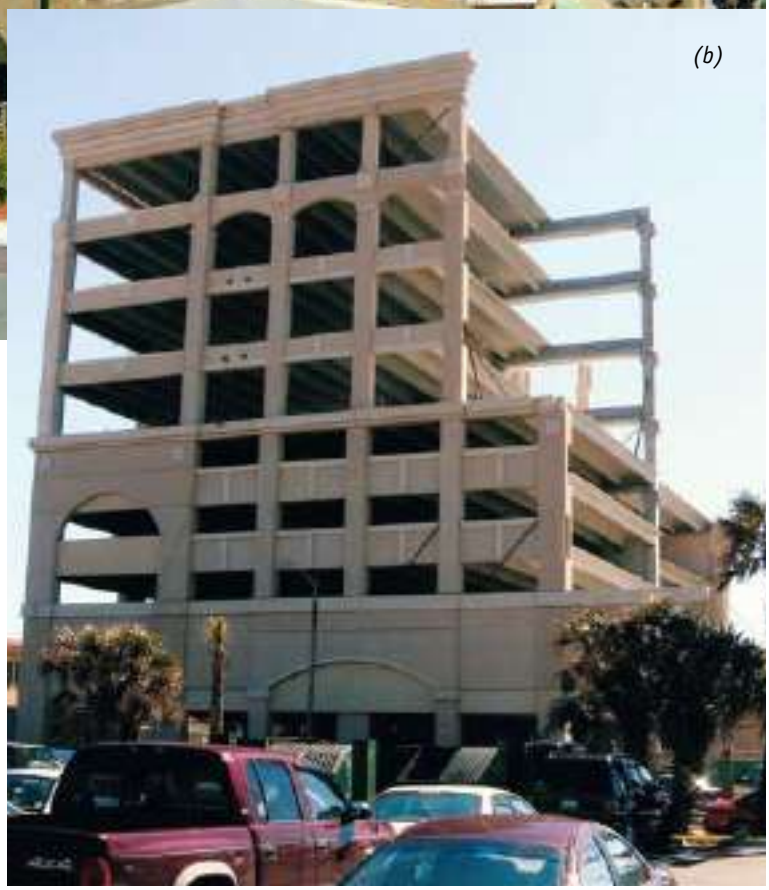

to use cast-in-place concrete and was converted to loadbearing precast concrete to accelerate the schedule (Fig. 2.5.13[b]). Precast concrete also made sense because of an extremely restrictive building site. The building footprint is 120 x 240 ft (37 x 73 m) and the lot size is 125 x 300 ft (38 x 91 m).

Two-story, loadbearing, punched window wall units, 14 x 31 ft (4.3 x 0.95 m) in section and 9 $^1/_2$ in. (240 mm) thick, were stacked and engineered to become an integral part of the structure taking the vertical and horizontal floor and roof loads (Fig. 2.5.14 [a] and [b]). The developer was able to eliminate

the perimeter structural steel columns. Also, the precast concrete elevator shaft was designed as a lateral load resisting frame. From an architectural viewpoint, the flexibility of the precast concrete system offered the owner unlimited colors and textures, deep reveals, custom designed cornice details, and a virtually maintenance-free exterior finish. The precast concrete system for the 4-story, 117,000 ft^2 (10,900 m^2) Class A office building saved more than $250,000 over a conventional precast concrete and structural steel building of similar size.

Photo: Brian Griffis.

Fig. 2.5.14(a) & (b)
Deerwood North 300, Jacksonville, Florida; Architect: Rolland Delvalle & Bradley; Photo: Dennis O'Kane.

Fig. 2.5.15(a), (b) & (c)
Arapahoe County Centrepoint Plaza, Aurora, Colorado; Architect: Barker Rinker Seacat Architecture, P.C.; Photos: Barker Rinker Seacat Architecture.

The four-story total precast concrete structure in Fig. 2.5.15(a) has 175,000 ft^2 (16,300 m^2) of double tees supported by precast concrete beams, architectural precast concrete walls, and one-piece, four-story columns. The erection of the precast concrete was completed in nine weeks (Fig. 2.5.15[b]). A design feature of the structure is that the second floor extends out from the basic line of the building. This required a large transfer beam to support the upper exterior wall back at the building line. The spandrels use thin inset brick framed top and bottom with colored concrete that has an acid-etched finish. The top band also has a feather feature created with a form liner. The exterior columns are colored concrete with an acid-etch finish and the top of the columns has a medallion of feathers cast with a form liner. The entrance of the building features large wall panels with a form liner finish of large feathers. The feather theme is to honor and respect the Arapahoe Native Americans (Fig. 2.5.15[c]).

Aesthetics were the driving force behind the innovative precast concrete techniques used for the headquarters building in Fig. 2.5.16(a). For while the use of an all-precast concrete structural system with load-bearing exterior panels saved time and money and provided a variety of design advantages, the most striking aspect of the project was the dramatic image created by the precast concrete panels, which include a random cut-stone design on the lower levels. Some of the

base panels are 22 in. (560 mm) thick and weigh up to 58,000 lb (26,300 kg) each. The building's heavily rusticated base needed to match the rough texture and color tone of the thermal granite finish on the adjacent headquarters building. Because repetition becomes obvious when panels are placed next to each other, nearly 280 different stone patterns were sculpted in clay. A negative rubber liner was then produced from the clay molds that could be moved and rotated within each panel to avoid repetition on the final panels. To hide the normally vertical joints of the precast concrete panel system, small, shallow connecting pieces were grouted into place to span the joint space and simulate the appearance of stone masonry work. The structure is three bays wide, framed with 10 ft (3 m) wide double tees and precast concrete core walls. The core walls serve as lateral support, with inverted tee beams and columns picking up the center span's load. Two five-story wings are united by a central glazed rotunda that serves as the main visitor entry. The wings are basically identical but are rotated 180 degrees from each other so the building avoids redundancy with an alternating convex/concave massing. The entablatures across the front and back entries to the building consist of historically accurate, tapered precast concrete columns that were cast vertically with horizontal joints to emulate Roman/Tuscan columns. The columns align with the belt course of the base panels (Fig. 2.5.16[b]). From initial design to full occupancy took only 22 months, with the 308,000 ft^2 (28,600 m^2) office structure erected in 218 calendar days (Fig. 2.5.16[c]).

Fig. 2.5.16(a), (b) & (c)
Starz Encore Headquarters, Englewood, Colorado; Architect: Barber Architecture;
Photos: (a & b) David Cornwell Photography, (c) The Weitz Company.

The apartment complex in Fig. 2.5.17(a) was the first significant application of the **precast concrete hybrid moment resistant frame (PHMRF) system**. The PHMRF is a lateral–force resisting building structural system using precast concrete beams and columns joined together with both mild steel reinforcement and post-tensioned high-strength steel strands. Compared to the common structural steel or cast-in-place concrete systems, this manner

Fig. 2.5.17(a), (b) & (c)
The Paramount, San Francisco, California;
Architect: Elkus Manfredi Architects, Ltd., Design Architect;
Kwan Hemmi Architects and Planners, Architect of Record;
Photos: (a & c) David Wakely Photography, (b) Pankow.

of resisting seismic forces significantly reduces the potential for damage to the key elements of a building's frame. The perimeter precast concrete moment frame serves as both the lateral–force resisting system and the architectural façade (Fig. 2.5.17[b]). The architect was able to use the high quality and flexibility of precast concrete to create an articulated and visually interesting façade design. Sandblasting, reveals, and bullnoses all add to the complexity and interest of the façade treatment (Fig. 2.5.17[c]). At 39 stories and 420 ft (128 m) high, the building was the tallest concrete structure at the time it was constructed, in addition to being the tallest precast, prestressed concrete framed building located in Seismic Zone 4. This building is the culmination of the Precast Seismic Structural Systems (PRESSS) research program that has been confirming the validity of advanced precast concrete seismic concepts over the last decade.

The seven-story mixed-use residential project in Fig. 2.5.18(a) features 225 lofts perched above ground floor retail and restaurant space and three levels of above-grade and subterranean parking. The total precast concrete building was built with a precast concrete hybrid moment-frame system. A well controlled structural testing program confirmed that this frame system demonstrated superior performance to a conventional cast-in-place concrete frame. The building will be able to handle large seismic drifts while experiencing minimal damage because the structural system was designed with a post-tensioned, self-righting mechanism. The system's prestress design has enough pre-compression to assure recentering of the building to its original position after the ground stops shaking from a major seismic event. The precast concrete columns and beams feature various levels of sandblasting and reveals. One hallmark of the project was the speed of construction, which is critical in a downtown area. Achieving the completed look to the precast concrete structure took only three-and-a-half months (Fig. 2.5.18[b]).

Fig. 2.5.18(a), (b) & (c) 800J Plaza Lofts; Sacramento, California; Architect: LPA Sacramento Inc.; Photo: (b) LPA Sacramento Inc.

2.6 PRECAST CONCRETE PANELS USED AS SHEAR WALLS

In many structures, it is economical to take advantage of the inherent strength and in-plane rigidity of exterior precast concrete wall panels by designing them to serve as a part of the lateral-load resisting system. The wall panels provide all or a portion of the lateral stability of a structure when combined with diaphragm action of the floor construction. Walls taking in-plane horizontal loads (lateral forces) from the effects of wind or seismic forces are referred to as shear walls. The shear walls may be, but do not need to be, bearing walls. Shear walls are used as the most common and economical lateral–force resisting system and have been used widely in buildings up to 30 stories tall, although more typically in low- to mid-rise structures.

Fig. 2.6.1(a) & (b)
Sarasota County Judicial Center, Sarasota, Florida;
Architect: BMK Architects Inc. and HLM Design, Joint Venture
Photos: Scott McDonald ©Hedrich Blessing.

A shear-wall system's effectiveness is dependent largely upon panel-to-panel connection design. A significant advantage of jointed construction is in the inherent ease of defining load paths through connections. As such, it is relatively easy to integrate a precast concrete lateral–force resisting system's performance with that of the vertical loadbearing frame.

Shear walls are vertical members, which resist and transfer lateral forces, in or parallel to the plane of the wall, from the superstructure to the foundation. Thus, shear walls act as vertical cantilever beams. Shear walls are placed at appropriate locations within and around the building perimeter according to the architectural and functional design requirements. The 1 ft (0.3 m) thick panels on the judicial center in Fig. 2.6.1(a) measure 21 x 15 ft (6.4 x 4.6 m). They serve as shear walls at the corners of the building (Fig. 2.6.1[b]).

Continuous steel plate connections were cast into the corner panels to permit a welded connection at the vertical corner joint.

Typically, a structure incorporates numerous walls, which can be used to resist lateral forces, in both principal axes of the building (Fig. 2.6.2). Connections can be designed for specific directional resistances while maintaining flexibility, which may be beneficial. Because of the importance of shear walls in the behavior of the building, the engineer of record must collaborate with the precast concrete engineer in the implementation of the lateral force resisting system design. If the structure includes architectural precast concrete panels that could act as shear walls, but are not intended to do so, the connections must be designed so as not to attract unintended forces into the panels. The portion of the total lateral forces that each intended shear wall resists depends on the wall's bending-and shear-resistance capacity, the participation of the floor, and the characteristics of the foundation. For most structures, lateral load distribution to the walls is based on the properties of the walls (their relative stiffnesses).

The lateral forces the building must resist may be wind, seismic or blast loads. The magnitude of these loads varies according to a project's purpose and geographic location. Concrete panels have the inherent strength required to perform as shear walls. It is important that the connections be designed to transfer lateral forces, and also accommodate thermal movements and differential deflections (or camber), as covered in Section 4.5.2. In some cases, the ability to transfer lateral forces may be a panel's only structural purpose. But, it is more often combined with loadbearing or wall-supporting capabilities.

Shear walls are economical because walls already required by the building layout (such as exterior walls, interior walls, or walls of the elevator, stairway, mechanical shafts, or cores) can be designed as structural shear walls. Load transfer from horizontal diaphragm to shear walls, or to elevator walls, stairway cores, or mechanical shafts, can be accomplished either via connections or by direct bearing. Whenever possible, it is desirable to design shear walls as gravity loadbearing panels. The increased dead load acting on the panel is an inherent advantage to its function as a shear wall because it increases the panel's resistance to uplift and overturning forces created by lateral forces.

The effect of cumulative loads on connections between panels must be considered since these loads become a significant factor in determining minimum panel dimensions. Shear walls in precast concrete buildings can be individual wall panels or wall panels that are connected together to function as a single unit. Connected panels greatly increase shear resistance capacity when compared to the same length of panels acting independently as several narrower shear walls.

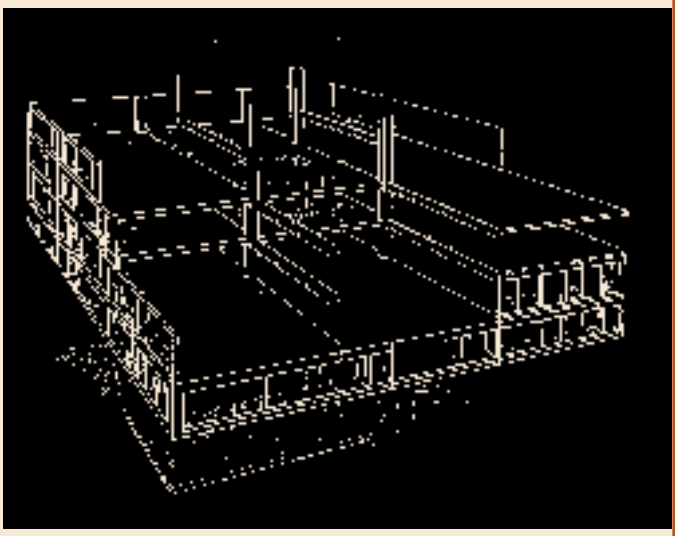

Fig. 2.6.2 Exterior shear walls.

Connecting long lengths of wall panels together, however, can result in an undesirable build-up of volume change forces. Hence, it is preferable to connect only as many units as necessary to resist in-plane shear forces and the associated overturning moment. Connecting as few units as necessary near the mid-length of the wall will minimize the volume change restraint forces.

In some structures, it may be desirable to provide shear connections between non-loadbearing and loadbearing shear walls in order to increase the dead load resistance to moments caused by lateral loads. However, in most cases, an exterior shear wall (or perimeter frame) system provides more efficient and flexible floor plans than an interior shear wall system because it may eliminate the need for a structural core.

Furthermore, exterior shear walls do not affect the interior traffic flow or sight lines. The exterior walls can be designed to provide the vertical strength and horizontal connections to allow the entire wall to function as a single unit to mobilize dead load overturning resistance. In addition, they may eliminate the need for exterior columns and beams (Fig. 2.6.2).

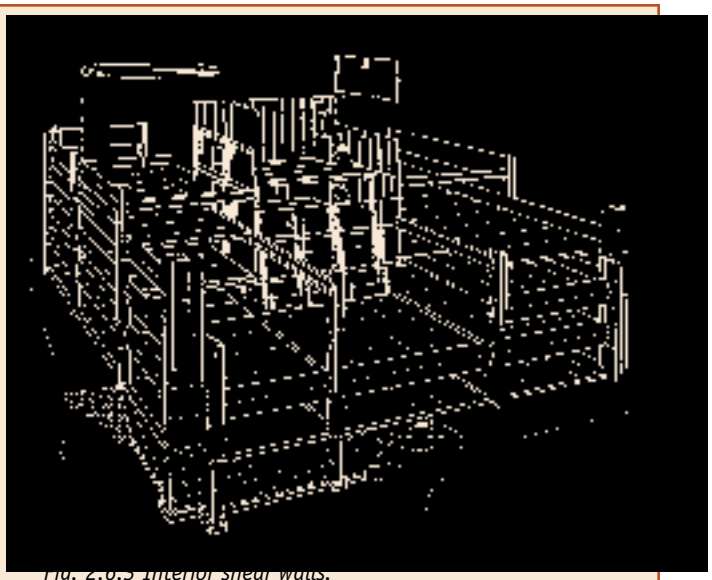

Fig. 2.6.3 Interior shear walls.

In an interior shear wall system, the lateral forces are not transferred directly to the foundation. Instead, the wall panels distribute the lateral forces to floor diaphragms, which, in turn, transfer them to a structural core or to the interior shear walls (Fig. 2.6.3). Frequently, shear wall panels are connected vertically and at the corners to form a structural tube that cantilevers from the foundation, making the panels more efficient at resisting lateral loads.

2.7 PRECAST CONCRETE AS FORMS FOR CAST-IN-PLACE CONCRETE

Architectural precast concrete units also may serve as forms for cast-in-place concrete. This application is especially suitable for combining architectural (surface aesthetics) and structural functions in loadbearing façades (it avoids the problems of matching the surface finish of the cast-in-place concrete to architectural precast concrete), or for improving ductility in locations of high seismic risk by using wet cast connections with high levels of reinforcement at the joints. Continuity and ductility are achieved by casting in place the beams and columns using precast concrete loadbearing panels as the exterior formwork.

The ductility of walls partially depends on reinforcement locations. Ductile behavior is improved significantly if the reinforcement is located at the ends of the walls. This way, structurally inactive cladding can be designed to become a major lateral load resisting element. Seismic and wind loads are resisted primarily by the building central core and partly by the ductile concrete exterior frame. Basically, floor slabs act as diaphragms. Figure 2.7.1 illustrates the use of cast-in-place concrete to tie the walls, beams, and floor together. This can be an efficient system for providing lateral resistance in precast concrete buildings.

The use of precast concrete as forms can reduce construction time since all of the formwork required for a structure can be manufactured in advance of concrete placement. This permits greater flexibility and continuity in concrete placement activities. Delays in placing the concrete due to the time required for preliminary curing of concrete preceding form removal and re-erection of forms can be eliminated. The precast concrete units may be erected quickly and the structure is complete when the cast-in-place concrete is placed and has achieved its design strength. The need for temporary outside forms is eliminated.

The architectural precast concrete form can be non-composite and serve only to achieve a desired architectural effect after the cast-in-place concrete has achieved design strength. This is accomplished by providing compressible joints between abutting precast concrete panels, and neglecting (or eliminating) bond at the interface of the precast and cast-in-place concrete. The architectural precast concrete element is then non-composite with the cast-in-place concrete. Reinforcing steel extending from the precast concrete into the cast-in-place concrete only needs to be of sufficient strength to support the formwork unit.

Realistic assumptions with regard to construction techniques are required. It must be determined (or specified) how and where the precast concrete panels will be supported during concrete placement in order to design the proper reinforcement within the panels. A mockup section may be necessary to test the construction procedures before the project gets under way. Such a mockup will also assist in refining panel shape, size, finish, joint locations, and connections.

Concrete stay-in-place form panels should be erected and temporarily braced to proper elevation and alignment in such a way that the tolerances specified for the finished structure can be met. Temporary bracing for the panels generally consists of adjustable pipe bracing from panel to floor slab. Supports, braces, and form ties must be stiff enough so that their elastic deformation will not significantly affect the assumed distribution of

Fig. 2.7.1 Precast

- Cast-in-place porti integrate with pre to result in comple lateral system.
- Wall panel and sla shapes are plannec to create self-form elements.
- If precast concrete to be composite w cast-in-place (C.I.F concrete interior su face must be clear could be roughene and/or have insert ties bolts.
- Inserts to facilitate formwork may be provided.
- Reinforcing and in must be thoroughl planned to avoid conflicts.
- Temporary shoring and bracing may b required.

the load from the fresh concrete. Form ties may be attached to embedded strap anchors or threaded inserts provided in the panels for that purpose, or welded to plates cast in the panels. Ties are then fastened in the conventional manner with hardware on the outside of the interior wood or steel forms. Column forms may use column clamps or be wrapped with steel bands to aid in resisting hydrostatic pressure. Care must be taken to protect corners of precast concrete units when wrapping forms.

The designer should specify surface finish and desired minimum thickness of precast concrete, but design and layout of the forms and supporting systems will normally be the responsibility of the contactor. The designer should require that shop drawings be submitted for review before the concrete is placed.

In other cases, it may be desirable to establish interaction between the precast concrete form and the cast-in-place concrete so that they act compositely in the completed structure. It is then necessary to provide shear transfer between the precast concrete and the cast-in-place concrete. Shear transfer is accomplished by bond and/or mechanical connections. The element may then be treated as an integral unit for subsequent applied loads, designed in accordance with the composite concrete section of the ACI 318 Building Code. If the precast concrete element is arranged vertically (such as a column or wall form) and not otherwise supported, the reinforcement that passes across the interface should be adequate to support the architectural precast concrete unit. This reinforcement should be adequate to restrain bowing in the precast concrete element.

Deflection of stay-in-place precast concrete beam forms, and warping of wall forms, may result from differential shrinkage of precast and cast-in-place concrete, as well as from the dead load or lateral pressure of the cast-in-place concrete. Stay-in-place forms should be designed to limit form deflection to $^1/_{360}$ of the unsupported height or length. Cambering of architectural precast concrete forms to compensate for deflections is expensive and should be avoided. Where the member is long enough to develop bonded strand, pretensioning may be used in the precast concrete form units.

Horizontal construction joints in the cast-in-place concrete should be made 3 in. (75 mm) below the top edge of panels used as permanent forms rather than in line with horizontal form joints. This reduces the possibility of water leakage through the construction joints.

Design of composite flexural members using precast concrete as forms requires locating form joints in areas remote from points of high moment, any reinforcement in the precast concrete must be discontinued at the form joint location. With the joint so located, the shear at that section can usually be adequately resisted by the reinforcement designed for this purpose and contained in the cast-in-place concrete.

To determine the feasibility of architectural precast concrete form units and the economies they may ef-

fect, the following aspects of a structural concept should be considered:

1. The parts or elements of the structure that appear to be most readily adapted to construction using precast concrete forms.
2. The types of form units best suited for the various parts of the structure.
3. Design and installation details for form units that will fill their functional requirements with minimum production and erection costs.
4. The minimum size of structure or the minimum number of form units for economical form unit production.
5. Reduction or elimination of special form handling equipment not otherwise required for construction.
6. Structure modifications (details and dimensions) to reduce number of odd shapes and sizes of form units.

The four-tiered elliptical freestanding colonnade in Fig. 2.7.2(a) contains study areas and reading rooms, and is constructed of precast concrete panels that double as formwork for cast-in-place concrete. The precast concrete kit-of-parts includes twin column panels 16 to 28 ft (4.9 to 8.5 m) high, a U-shaped back piece, and 9-ft-high (2.7 m) spandrels (Fig. 2.7.2[b] and [c]). The hybrid columns have a sandblasted face. The loadbearing capacity of the integrated precast and cast-in-place concrete frame resulted in a substantially stronger wall, one that is structurally independent of the central library core. The colonnade was used to evoke the classical language of traditional library architecture.

The 900,000 ft^2 (84,000 m^2) office complex in Fig. 2.7.3(a) and (b) consists of two terraced towers, nine and ten stories high, that used precast concrete wall panels as forms for the cast-in-place concrete. The wall panels were designed with their edges serving as forms for the columns and spandrel beams, thus integrating the panels into a tube to resist lateral forces.

The exterior architectural expression of the medical facility, characterized by large window openings and

Fig. 2.7.2(a), (b) & (c)
Library Square, Vancouver, BC, Canada;
Architect: Moshe Safdie and Associates;
Downs/Archambault Partners, Associate Architect;
Photos: (b & c) Downs/Archambault Partners.

Fig. 2.7.3(a) & (b)
Marathon Plaza; San Francisco, California;
Architect: Whisler-Patri;
Photos: Pankow.

thin precast concrete spandrel and column profiles, was established in the master plan phase of the project in Fig. 2.7.4(a). Thin spandrel and column profiles seem to conflict with the functional requirement for a structure that satisfies stringent vibration characteristics. However, both of these objectives were achieved by using the $4^1/_2$-in.-thick (110 mm) precast concrete spandrel beams and columns as part of the formwork for the cast-in-place concrete (Fig. 2.7.4[b] and [c]). This allowed the use of thinner precast concrete façade elements and eliminated the space normally required for precast concrete connections and the associated tolerances needed to satisfy the vibration criteria.

Fig. 2.7.4(a), (b) & (c)
University of Texas Southwestern Medical Center, Phase IV
Dallas, Texas;
Architect: Omniplan Inc.;
Photos: Omniplan Inc.

3

Energen Building, Birmingham, Alabama;
Architect: Smallwood, Reynolds, Stewart, Stewart & Associates, Inc.; Photo: Gabriel Benzur.

CHAPTER THREE
SURFACE AESTHETICS

3.1 GENERAL

Many facets in the design of architectural precast concrete are of vital importance to the architect. Two significant design considerations described in Chapter 2 were total wall analysis and repetition and the master mold concept. Chapter 3 discusses the surface aesthetics of precast concrete panels, which require decisions by the architect on considerations such as color, form and texture, and weathering. Because of the versatility of the material, the architectural focus can vary greatly from project to project, changing the relative importance of each of these facets to the design.

Proper selections of color, form, and texture for a building's precast concrete exterior is critical to creating a successful aesthetic appearance. The decisions depend not only on cost, delivery schedule, and client satisfaction but on the local and regional context as well. The desired colors and textures can be achieved by varying aggregate selection, matrix color, finishing processes, and depth of exposure of the aggregate. The proper use of samples and mockups can ensure the project's success.

Precast concrete allows architects to be innovative and create designs that cannot be accomplished with other materials. It provides the freedom and flexibility of shaping concrete into structure and architecture. The *Architectural Precast Concrete–Color and Texture Selection Guide,* published by PCI, helps architects define and achieve their aspirations. The guide's photographs serve as a visual reference for initial selection of color, texture, and finish and should be followed by producing samples at a precaster's plant to aid in the final selection of color and texture.

However, because of different material sources and manufacturing techniques, the guide's photographic samples and the final product may not be an exact match. Samples must be made to ensure that the desired colors and textures are satisfactorily matched. Samples for architectural precast concrete are custom produced to translate the architect's specific design concept into a standard for realistic and economic production requirements.

In the schematic design stage, a schedule for creating samples and recognizing uniformity requirements should be considered, and the designer should focus on selecting shapes, sizes, colors, textures, and finishes for the samples well in advance of finalizing the bid documents.

The building's appearance results from the architect's use of light, shadow, texture, and color. Color and, consequently, color tone represent relative values. They are affected by light and shadow, intensity, time of day, and nearby colors. Thus, color selection should be made in lighting that replicates the light and shadows of the site's natural daylight.

The architect should give sufficient details or descriptions on the contract drawings to indicate clearly the extent of all exposed surfaces of the units and their respective finishes. This is particularly important for returns and interior finishes. The location and dimensions of reveals should also be shown. All of these items should then be shown on the shop drawings.

3.2 UNIFORMITY AND DEVELOPMENT OF SAMPLES

Because acceptable color uniformity and shading intensity are evaluated visually, they are generally a matter of an individual's subjective judgment and interpretation. Acceptable variations in color, texture, and uniformity should be determined at the time the sample, mockup, or initial production units are approved. Accordingly, it is beyond the scope of this Manual to establish precise or definitive rules for product acceptability on the basis of appearance. However, a suitable criteria for acceptability requires that the finished concrete surface should have a pleasing appearance with minimal color and texture variations from the approved samples. The finished face surface should show no obvious imperfections other than minimal color and texture variations from the approved samples or evidence of repairs when viewed in typical lighting with the unaided eye at a 20 ft (6.1 m) viewing distance. Appearance of the surface also should not be evaluated when light is illuminating the surface from an extreme angle, as this tends to accentuate minor surface irregularities (see Section 3.5.17).

The major factors affecting uniformity of architectural

precast concrete units are described in Section 3.2.1. These should be recognized through all stages necessary to prepare, assess, and approve samples.

Samples of architectural precast concrete are intended to represent the materials and finish used. The concrete's color or appearance likely will vary during production, so samples showing that expected range should be required. Product appearance is influenced by factors such as quality, complexity of the casting, and physical mass, as well as the natural characteristics of the concrete ingredients. In short, a single 12 × 12 in. (300 × 300 mm) sample may not accurately represent a production casting, so larger samples should be used.

3.2.1. Uniformity

Concrete contains natural materials, and it is these materials' inherent beauty that is most often expressed in architectural concrete. The limitations of these natural materials with respect to uniformity must be considered, and the requirements for uniformity of the precast concrete product must be set within these limitations.

Some color difference between nominally identical precast concrete units is inevitable, but color variation, between and within panels, should be kept within an agreed range. Therefore, it is important, at the sample stage, to reconcile the expectations of the owner and architect with the practical limits of color uniformity. Some designers prefer to see color variation akin to timber and natural stone, while others desire the consistency and uniformity of paint. Where uniformity is essential, the precaster can provide significant input in balancing colors, textures, and shapes to achieve this uniformity.

Color control is, thus, about ensuring that panels or other precast concrete elements for a project have an acceptable tonal range.

Uniformity of color and texture requires the precaster to manage a complex set of variables, including raw materials, mixture proportions, mixing, casting and consolidation, curing, finishing, and weathering. When fabrication continues over extended periods, color can vary because of the changes in the physical characteristics of cements, coarse aggregates, and sand, even though they may be from the same sources.

The color of a concrete is dependent on, among other factors, the cement and other materials used. Variation in the color can occur from day to day in the product from a single cement plant, and color differences are to be expected among cements obtained from different plants. Cement color reflects chemical composition and processing conditions. Usually, cement colors vary from white to shades of gray and brown. Greater color uniformity results can be expected when using white cement than when using gray cement.

The type and brand of cement must also remain consistent. Changing from Type I to Type III portland cement within one job will cause color variations because Type III portland cement is a finer grind of cement than Type I. Even though the color changes of the cement would be minimal, it is recommended that types of cement not be changed.

Because the largest portion of a concrete mixture is aggregate, the color or gradation of aggregate can influence the color of concrete. A substantial change in aggregate color can make a noticeable difference in surface color, especially if an exposed finish is specified. Therefore, the precaster should stockpile, either at the plant or quarry, the fine and coarse aggregates for each type of exposed finishs.

Coarse aggregates should be reasonably uniform in color. A mixture can have more than one aggregate type to get the desired color. Light and dark coarse aggregates require care in blending so that color uniformity is achieved within a single unit. Choosing aggregates with a small color difference between the light and dark aggregate will enhance uniformity. The architect should specify that the matrix's color or tone match that of the coarse aggregate so that variations in the depth of exposure and concentration of aggregate will not be as noticeable. Panels containing aggregates and matrices of contrasting colors will appear less uniform. Also, as the size of the coarse aggregate increases, less matrix is seen.

The fineness modulus (FM) of the fine aggregates and the content of fines (particles passing a #200 [75 μm] mesh sieve) can have a significant impact on final appearance. Units made with a higher content of fines will be lighter colored due to the increased surface area of fine particles and their light-scattering characteristics. Elimination of fines, or keeping them to a minimum, will help to prevent color variations.

Chemical admixtures and pigments affect final color. They need to be added in the same amounts and in the same sequence throughout the job to avoid color variations.

Each factor discussed here affects color consistency, but daily variations in moisture content are probably the single most common cause of color consistency problems. A change in the water-cement ratio can result in color inconsistency from batch to batch.

The water-cement ratio in a concrete batch is affected by the moisture content of the raw materials, primarily the sand, and the amount of mixing water. Automatic moisture control of the sand and adjustment of the mixing water volume for every batch help to minimize such color fluctuations.

The mixing time required to achieve complete dispersion of all materials varies from plant to plant depending on the type of mixer and the aggregates used. If pigmented concrete is not mixed long enough, the color is less intense. Also, if the concrete batching sequence is varied, color uniformity will be affected.

The color of precast concrete can vary between adjacent elements due to daily variations in the curing conditions for the concrete. The concrete and mold temperatures should remain as consistent as possible throughout the job to minimize color variations.

If a sample is stored indoors, its color will vary from a panel stored outdoors. A panel stored outdoors and exposed to precipitation is cured differently than the controlled enviornment of the sample. It is difficult to exclude the influence of the climatic changes on color over a year if the precast concrete units are placed in storage for long periods of time, as may be dictated by contractural conditions or by operations at the construction site beyond the control of the precaster.

The last production process that affects panel aesthetics and needs to be controlled is the finishing. A smooth-off-the-form finish is extremely difficult to produce consistently. Any type of finish that has some degree of aggregate exposure will appear more uniform than a smooth finish because the natural variations in the aggregates will camouflage subtle differences in the texture and color of the concrete. The degree of uniformity normally improves with an increased depth of exposure. Some variation is to be expected in color and texture, even after finishing. Assessment of color uniformity of the panels prior to finishing offers little information. Dividing large surface areas into smaller ones with reveals or rustications also helps to lessen any variation in texture that might be visible.

Many finishes cannot be achieved with equal visual quality on all faces of the unit because of several factors, such as mixture proportions, variable depths (pressures) of concrete, and differences in consolidation techniques, particularly in the case of intricate shapes with complex flow of concrete.

During consolidation, the effect of gravity forces the larger aggregates to the bottom and the smaller aggregates, plus the sand and cement, upwards. Consequently, the down-face in the mold will nearly always be the most uniform and dense surface of the unit. The final orientation of aggregates may also result in differences in exposure between the down face and the returns in exposed-aggregate surfaces. Emphasis should be placed on choosing suitable concrete mixtures with aggregates that are reasonably spherical or cubical in shape to minimize differences. For large returns, or situations where it is necessary to minimize variations in appearance, concrete mixtures should be selected where the aggregate gradation can be uniformly controlled and preferably fully graded. Exposures should be medium to deep, and color differences between the ingredients of the mixture should be minimal.

The color of any concrete product can be expected to change to some degree over time. Atmospheric pollution and any accumulated grime or soot will darken the surface. These effects can be controlled by producing well-detailed precast concrete units with high-quality concrete. Just like all material surfaces left in the open, precast concrete occasionally must be cleaned to remove pollutants and restore color. Efflorescence may occur randomly on the product surface during its first several years of exposure, which can cause it to look faded or lighter in color if not cleaned off. After years of exposure, the cement paste may erode from the surface depending on environmental conditions, such as acid rain. This will expose more fine aggregate and shift the color of the concrete to the color of the aggregate.

The sample's appearance should be assessed during both wet and dry weather. White concrete usually produces less of a difference in tone between wet and dry panels. In climates with intermittent dry and wet conditions, drying-out periods may produce temporary mottled appearances in all-gray cement façades, particularly on fine-textured surfaces. On the other hand, dirt (or weathering) normally will be less objectionable in gray panels.

Some factors are outside the precaster's control:

- Changes in cement color. This is more likely to be associated with gray cements than with off-white or white because the latter are manufactured to very close color tolerances.
- Variations in curing as a result of changes in ambient temperature and humidity.
- Variations between horizontally and vertically cast units.

Although material and production factors may cause differences in color or texture, lack of uniformity will be minimized if the recommendations of this section are followed. These include creating pre-bid samples to establish the general color and texture for the project, producing approval samples after the contract award to evaluate the same mixture under sample production conditions, producing 4 × 4 ft (1.2 × 1.2 m) sample panels to show the range of anticipated color and texture, and viewing initial production panels to see the final outcome of the process based on bulk ordering of currently quarried materials and full concrete batches.

3.2.2 Development of Samples

For the architect to develop and select the color and texture for architectural precast concrete at the conceptual stage requires a combination of art and skill. The same is equally true of the precaster, which must translate these requirements into workable concrete mixtures and the proper finishing techniques. There are numerous choices in textures and colors due to the great range of coarse aggregates, sands, cements, and pigments, combined with a variety of finishing processes.

Achieving the desired textures and colors with feasible production techniques is a process that requires the precaster to produce samples that satisfy the architect's design concepts. This can be accomplished by producing a few samples, or it may require a series of samples and considerable investigation of corresponding production and finishing techniques or by reference to the *PCI Color and Texture Selection Guide*. Figure 3.2.1 shows various samples to assist in selecting architectural finishes for shadowing and color. The selected samples should be available for inspection and examination by prospective bidders.

The importance of this process is not always recognized by architects or precasters. To ensure success, all research and development, including mixture proportioning, should be completed prior to formal bidding so that all precasters are estimating similar materials and finishes. It is also recommended that all precasters approved for a particular project develop samples for approval as a prerequisite for bidding.

Fig. 3.2.1

Fig. 3.2.2 Appearance variations achieved with different finishes on the same concrete mixture.

At this stage of the procedure, the development of samples may involve considerable expense in research and investigation on the part of the precaster. The architect can aid in sample development by visiting precasting plants that have sample selections on hand to assist in selecting limits for the desired finish. Because the architect is responsible for the final decision, design judgment should be supplemented with an assessment of the operating procedures and technical personnel from all plants likely to bid on the project. Watching plant operations and talking with plant personnel also help the architect obtain an understanding of production considerations.

Samples should be at least 12 × 12 in. (300 × 300 mm) to provide information on face mixture proportions (color tone) and finishes (texture) for the architect's initial aesthetic evaluation (Fig. 3.2.2). Larger samples are recommended, but they may be difficult to handle. The size of the samples should relate to the maximum size of aggregate to be used to allow for realistic placement of the concrete and accurate expression of detail.

From the 12 in. (300 mm) square samples, a preliminary evaluation should be made on the following issues:

- Matrix color (cement, pigment, and sand color).
- Coarse aggregate type and source (where aggregate exposure is planned).
- Degree of surface texture or depth of aggregate exposure.

Color selection should be made under lighting conditions similar to those under which the precast concrete will be used, such as the strong direct light or shadows of natural daylight.

Both designers and owners should remember that selection of a precast concrete sample represents only the first step in the development of the actual production of that element. It should not be considered a final decision. Completing the sample process remains extremely important and develops communication among all parties.

Some precasters have small samples in stock to show the colors, finishes, and textures used on previous projects (Fig. 3.2.3). Previous work of a similar nature can serve as a useful visual standard and highlight potential concerns. Even though an architect has seen the selected aggregates used with a similar finish in existing precast concrete units, it is important to develop specific project samples. These samples must reflect the relationship between materials, finishes, shapes, and casting techniques, such as mold types, orientation of exposed surfaces during casting, and consolidation procedures.

It is recommended that reference samples be used to determine product characteristics and quality, rather than

Fig. 3.2.3
Samples showing color, finish and texture at precast concrete plant.

explicit specifications by the architect that might prohibit the precasters from using a material or process that offers the best solution for producing the desired results.

3.2.3 Pre-Bid Samples

Individual plant preferences, differences in sources of supply, or different techniques developed in various plants serving the same area mean that not all precasters will be able to obtain an exact match of the selected sample(s). Many architects select and approve samples prior to bid closing. Then the approved precasters' names and corresponding sample code numbers are published in an addendum or the approval list is given in writing to the general contractors.

This practice may result in slight variations in color, aggregate, or texture but not necessarily in the quality supplied by different bidders. The individual precaster, within specification limits, selects the materials and employs the placing and finishing techniques best suited to its plant operations. By making approval of pre-bid samples a prerequisite for bidding, the architect and client are protected by requiring equivalent optimum quality from all precasters. All involved then know the result to be achieved in color and texture of the finish. When making pre-bid approval of samples part of the specifications, the architect should adhere to the following requirements:

1. Sufficient time must be allowed for the bidder to submit samples or information for approval. Time also must be provided to allow the approvals to be conveyed to the precaster in writing so they can estimate and submit an accurate bid.
2. Any pre-bid submittal should be treated in confidence, and the individual producer's solutions and/or techniques should be protected both before and after bidding.

All submitted samples should be clearly identified with the precaster's name, date produced, identifying code number, and name of project for which it was submitted. If the precast concrete units are to have an exposed interior finish, samples should also be provided for this purpose.

If the characteristics of submitted pre-bid samples deviate from the project specifications, the precaster must make this clear when submitting the samples and other required information for approval. For proper evaluation and approval of the samples, the precaster should state the reasons for any deviations. These reasons might include the precaster's concern over controlling variation in either color or texture within specified limits. In regard to adequacy of specified materials, concerns about satisfying all conditions of the specifications must be based on practical plant production requirements and the performance or weathering of the product in its final location.

3.2.4 Production Approval Samples

After award of the contract but before producing any units, the precast concrete manufacturer should prepare and submit for approval a representative sample or samples of the required color and texture. This doesn't need to be done if the pre-bid samples prepared by the plant were the basis for the specifications or the pre-bid approval method was used. Samples should be at least 12 × 12 in. (300 × 300 mm).

Although 12 in. (300 mm) square samples provide valuable information on texture and color tone for the

Fig. 3.2.4(a), (b) & (c)
Mockups to assist in finish selection.

architect's initial aesthetic evaluation, these small samples are unlikely to give a true picture of the possible variations of finish over a large area, demonstrate normal surface blemishes, or show the effects of the natural day-to-day variations of aggregates and cement.

Once the small samples are within an acceptable range, larger samples should be made to confirm that the mixture proportions, vibration, and finishing techniques necessary to make production-sized pieces could duplicate the aesthetic qualities of the small sample pieces.

For non-planar, curved, or other complex shapes, a flat-cast sample may not represent the anticipated appearance of the final product. Sample shapes should be selected to offer a reasonable comparison to the precast concrete units they represent. Also, the size of the samples should reflect the relationship among finishes, shapes, and casting and consolidation techniques. These techniques include mold types, thickness of concrete section, orientation of exposed surfaces during casting, and consolidation procedures. If the precast concrete units have an exposed interior finish, samples of the finish, color, and texture should also be shown for the back surface.

Any changes in material sources or in mixture proportions to facilitate production require new reference samples and approval review. Samples showing the expected range of variations should be supplied if specified or if the color or appearance of the cement or the aggregate is likely to vary significantly.

Figures 3.2.4(a), (b), and (c) show that a 12 in. (300 mm) square sample with a 2 in. (50 mm) thickness may bear little relationship to the appearance and physical characteristics of a production panel. Differences

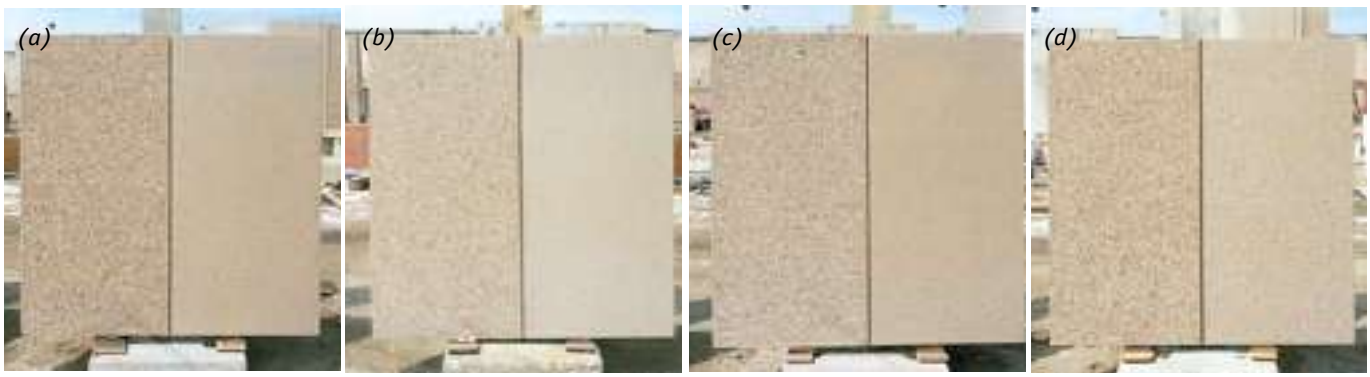

Fig. 3.2.5(a – d) Range samples.

in mass, density, and curing rate between the sample and the production panel may make direct comparison difficult. This is particularly true for insulated sandwich panels.

Mockups that include all project mixtures and finishes, as well as all major details and reveals, can be used to evaluate the production methods and the finished product. For example, if return elements are to be cast with a major panel section, the samples should have returns cast with them to represent how the finish will be accomplished on such sections. During review, features and problems unique to the project should be discussed. General factors affecting any color and finish variations should also be discussed.

Range samples should be produced: (1) when required by specification, (2) past experience of the plant with a mixture or finish, and (3) for large projects with multiple approving entities with little apparent precast concrete experience. At least three range samples of one size (full scale, but not necessarily full size) should be produced to demonstrate actual planned production conditions. These should establish the range of acceptability for color and texture variations; uniformity of returns; frequency; size and uniformity of air-void distribution; surface blemishes; and overall appearance. During the range sample review, the precaster will ask the architect or representative to inspect and approve (sign and date) the range panels.

Fig. 3.2.6 Production panel.

Samples or mockups should be viewed at a distance consistent with their position on the structure but no less than 20 ft (6.1 m). Overlooking this procedure can result in demands for shapes, textures, and drafts that are not only expensive but might not add value to the final project. Approved 12 × 12 in. (300 × 300 mm) samples should also be compared to the mockup to ensure original intent has not been lost. During the mockup review, the precaster will ask the architect or representative to inspect and approve (sign and date) mockup panel(s). Approved mockup panel(s) supersede the previously approved 12 × 12 in. (300 × 300 mm) samples. For panels to be properly evaluated, they should be stored under conditions similar to those of the actual work. Panels will be darker when damp than when dry.

The approved range samples or mockup panel(s) should be stored outdoors and positioned to allow comparison with production units. They also should be stored adjacent to each other to ensure similar lighting (sun and shade) for daily comparisons of finish and exposure. Figures 3.2.5(a) to (d) show the acceptable range of concrete samples made with 3/8 in. (10 mm) aggregate with retarded (left side) and acid-etched (right side) finishes. Only two of the retarded finishes were within the acceptable range on the three acid-etched samples. Therefore, one additional sample was

made to obtain an acceptable range for the retarded finishes. Figure 3.2.6 shows the production panel made after examining the samples shown in Fig. 3.2.5.

The acceptability of repair techniques for chips, spalls, or other surface blemishes can also be established on these samples. The face of each sample should contain at least two areas of approved size and shape that have been chipped out and then patched and repaired. The color, texture, and appearance of patched areas should match that of the adjacent surface (see Section 3.5.17). In evaluating this experimentally repaired area, the repair should be aged to give a true indication of its color. Repairs to the mockup should be at least one month old before acceptability is judged. Perfecting a repair procedure can save both time and money in the final outcome of the project.

Fig. 3.2.7(a), (b) & (c) Mockups.

If the project's size warrants, the architect and owner should authorize the expenditure for mockups, either of a full-scale portion of a panel or the entire typical unit. These may be several modules wide by one or two stories high. Investing in such mockups removes uncertainties held by both the architect and owner and may lead to modifications that improve the appearance and possibly reduce the overall project cost (Fig. 3.2.7[a] to [c]). The mockups allow the precaster and designer to explore a series of options for particularly challenging details prior to full-scale production. Larger samples require considerable time to produce, and they should not be specified unless sufficient lead time exists. If mockups are implemented in a timely manner, cost and schedule implications associated with revisions to the design may be avoided and measures adopted promptly to rectify problems, if any. Also, it may be desirable to separate the mockup costs from the base bid so the cost can be evaluated separately.

The ability to satisfy building envelope performance characteristics depends on the attention to detailing at the interface of dissimilar materials. Because each trade usually terminates its responsibility at the outer boundary of the material, critical information can be missed that affects the overall project. The mockup is an ideal mechanism for coordination of all trades with abutting materials.

Mockups can evaluate the following factors:

1. Range of acceptable appearance of color, texture, and details on the exposed face and uniformity of returns.
2. Orientation of casting (necessity of sequential casting).
3. Erection and bracing techniques.
4. Connection details.
5. Colors and finishes of adjacent materials (for example, window frames, glass, and sealants).
6. Dimensional accuracy of the precast concrete work and the constructibility of the specified tolerances.
7. Acceptability of the precast concrete unit's inside surface finish (where exposed).
8. Suitability of the selected sealers, if applicable.
9. Weathering patterns or rain runoff on a typical section of the precast concrete façade.

Mockups should be produced using standard production equipment and techniques. Important variables that should be controlled as close to actual cast conditions include retarder coverage rate and method of application, if used, mixture design and slump, admixtures, temperature of fresh and cured concrete, vibration, piece thickness, age at which finishing operations are performed, and method of cleaning. This is especially important with light etches that are particularly affected by changing conditions. Special details, such as reveal patterns and intersections, corner joinery, drip sections, patterns, colors, and textures, should be demonstrated in the mockup units for approval. Changes in aggregate orientation, color tone, and texture can easily be noted on full-scale mockup panels.

The mockup sample also can demonstrate the more detailed conditions that may be encountered in the project, such as recesses, reveals, outside/inside corners, multiple finishes, textures, and veneers. Mockup panels should contain all expected cast-in inserts, reinforcement, and plates.

When the mockups are manufactured and erected, all interested parties should be present and ready to discuss the approval for production of the panels. If changes are desired, all information should be recorded. Depending on the changes, production should not begin until the changes have been made and the mockups are approved.

Where mockups are not used, the architect and/or owner should visit the precast concrete plant and approve (sign and date) the initial production units. This approval should precede a release for production to avoid potential controversies later. However, delays in visiting plants for approvals will upset normal operations and the job schedule. The contract documents should state clearly how long the production units or the mockup structure will be kept in the plant or at the jobsite for comparison purposes. If specifications require mockups to be kept at the project site, sufficient additional samples should be maintained for quality control at the plant.

The contract documents also should permit the approved full-sized mockup units to be used in the job installation in the late stages of construction. The units should remain identifiable even on the structure until final project acceptance. The panels should be erected adjacent to each other to allow continued comparison, if necessary.

3.2.5 Assessment of Samples

If 12 in. (300 mm) square samples are used to select the aggregate color, the architect must remember that the general appearance of large areas of a building wall tend to be lighter than the samples. For example, exposed gray granite (salt and pepper) may look good on a small sample, but frequently comes out "mottled" in an actual panel if the coarse aggregate is small. If the predominant part of the granite is white, the mottling will be made worse with a gray matrix and vice versa. The finish may be made more acceptable if the face is sandblasted because of the resulting dulling of the colors, but it is still better to increase the maximum aggregate size to eliminate visual merging of the colors.

Mockups are best assessed effectively when mounted in their final orientation. Samples viewed from a distance of a few feet will reveal details that will not be noticed on a building when viewed from 50 to 100 ft (15 to 31 m). Details should be appraised from a distance typical for viewing the installed panel. Overlooking this may lead to demands for shapes, textures, and drafts that are not only expensive but may not even be identifiable in the finished building.

Another good example is the fluted panel. When viewed from a distance, the ribs should be reasonably deep to read. They should also have a draft related to the depth and spacing of ribs in order to facilitate

stripping without damage (see Section 3.3.2). Some precasters advocating increased draft have shown that draft does not detract from appearance by making panel samples with different drafts and by having them evaluated by the architect from a distance typical for viewing the installed panel.

The architect should observe the samples under the climatic conditions to which precast concrete units will be exposed, such as direct sun, rain, or shadows. The samples should also be judged in relation to adjacent buildings.

There is rarely enough time to allow weathering of samples over an adequately long period, but it is particularly important where a project with precast concrete is contemplated for production in stages. The architect is advised to limit the choice of aggregates and finishes in such projects to those that are in common use and are easy to duplicate in later stages. To counter weathering effects, cleaning of an earlier stage upon completion of the next one will often provide a reasonable match.

To obtain a reasonable appearance uniformity, a balance may have to be struck between configuration of the precast concrete unit and the choice of a concrete mixture. Returns in some finishes will not appear exactly like the front face (down face) due to casting techniques and aggregate shapes (see Section 3.3.7). This should be recognized and accepted within certain limits because it may well influence the architect's choice of shape, materials, and finishes.

Difficult mixtures and finishes with respect to uniformity may be appropriate and economical in flat panels cast face-down and without any appreciable return, but not in highly sculptured panels.

The architect should look at the many existing precast concrete applications and also recognize that added variations and new design concepts are possible.

3.2.6 Assessment Of Concrete Mixtures

The architect should specify the parameters of concrete performance requirements, but the actual design of the concrete mixture should be left to the precaster.

So that the architect may appraise the appearance and the expected performance of precast concrete units using a specific mixture, information should be obtained about the mixture to assess its anticipated performance and appearance. Such an assessment should be part of the pre-bid sample procedure described in Section 3.2.3.

This section discusses concrete characteristics to help the designer specify the proper concrete requirements and evaluate the mixtures proposed for the project. All concrete mixtures should be developed using the brand and type of cement, the type and gradation of aggregates, and the type of admixtures proposed for use in production mixtures. If at any time these variables are changed, the mixture should be reevaluated. This reevaluation may include one or more of the following concrete properties: (1) color, surface texture, or aggregate exposure; (2) air content or durability; or (3) strength (selected tests at appropriate ages).

Face and Backup Mixtures. The use of a separate concrete face mixture and a subsequent backup concrete or the use of a uniform concrete mixture throughout a unit depends on the practice of the particular plant or the size and shape of the unit and the type and extent of finish being produced as well as the setback of the windows. For reasons of economy, face mixtures are generally used, except in units of complex shapes and deep, narrow sections or returns where the procedures for separating the face and backup mixtures become too cumbersome. The choice should be left to the precaster.

The face mixtures contain special decorative aggregates, often in combination with white portland cement and pigment and are specially designed to achieve the desired surface appearance. Backup mixtures are composed of more conventional aggregates and gray cement and are used to reduce material costs in large units that have a decorative face mixture. If a backup mixture is not used, costs will be higher unless economical aggregates are used. However, a face mixture will be used for the full thickness when the material savings do not warrant the added costs of working with two mixtures.

Where a precast concrete unit is manufactured with an architectural concrete face mixture and a structural concrete backup mixture, these mixtures should have reasonably similar shrinkage and thermal coefficient of expansion characteristics in order to avoid possible undue bowing or warping. Consequently, these two mixtures should have similar water-cement and cement-aggregate ratios.

The combination of a normalweight face mixture and a backup mixture with lightweight aggregates may increase the possibility of bowing or warping. Before accepting such a combination of mixtures, sample units which are produced, cured, and stored under anticipated production conditions are often desirable to verify satisfactory performance.

If a separate face mixture is to be used, a minimum thickness should be determined. The thickness of a face mixture after consolidation should be at least 1 in. (25 mm) or a minimum of 1.5 times the maximum size of the aggregate; whichever is the larger. If larger aggregates are hand laid in the mold, these dimensions should apply to the concrete mixture used as the matrix.

The 1 in. (25 mm) dimension is chosen because the consolidated face mixture is often used to support the reinforcing steel cage and thus provide the proper concrete cover over the reinforcement. For units not exposed to weather or for face mixtures applied face-up (seeded), this dimension may be reduced provided the backup mixture does not bleed through the face mixture.

A concrete design strength should be determined by the design team based on in-service requirements, not forgetting production and erection considerations. Because precasting involves stripping of units from the mold at an early age, rapid strength development is of prime importance. Transportation and erection involves the next strength requirement to which precast concrete units are exposed. The precaster should establish minimum stripping and transportation strength requirements. These strength levels will depend on the shape of the unit, handling, shipping, and erection techniques, and will normally result in a high 28-day strength. A 5000 psi (34.5 MPa) compressive strength at 28 days normally satisfies production requirements and also ensures proper durability.

In cases where a 5000 psi (34.5 MPa) strength of the face mixture is not structurally necessary, or is difficult to attain due to special cements or aggregates, the architect may still achieve sufficient durability and weathering qualities by stating proper air-entraining and absorption limits at a strength level as low as 4000 psi (26.7 MPa).

The strength of face and backup concrete is usually determined by using 6 × 12 in. (150 × 300 mm) or 4 × 8 in. (100 × 200 mm) standard cylinders. If fabrication of cylinders is impractical, 4 in. (100 mm) cubes may be used. The measured cube strength should be reduced 20% unless strength correlation tests to 6 × 12 in. (150 × 300 mm) cylinders have been made to obtain an estimate of cylinder strength. It may be impractical to prepare a standard test cylinder, for example, in the case of a face mixture containing a high percentage of coarse aggregate. The 4 in. (100 mm) cube will provide an adequate size for practically all face mixtures. Such cubes may be prepared as individual specimens, or they may be sawed from 4 in. (100 mm) thick slabs. The slabs may be more convenient and are probably more representative of the final product.

In assessing the strength of concrete, statistical probabilities should be considered. Many variables can influence the strength of concrete even under close control. The strength level of the concrete should be considered satisfactory if the average of each set of any three consecutive cylinder strength tests equals or exceeds the specified strength and no individual test falls below the specified value by more than 500 psi (3.4 MPa). Alternatively, compressive strength results from a predetermined number of consecutive tests may be processed statistically and the standard deviation established. This approach will measure the overall uniformity in performance. See also ACI 214, *Recommended Practice for Evaluation of Compression Test Results of Field Concrete*.

It is advisable to specify air-entraining requirements for face mixtures in precast concrete units exposed to freeze and thaw cycles in the presence of moisture. An air entrainment of 4% is normally desirable. Taking into consideration the many special consolidation techniques used for placing face mixtures, a fairly liberal variation of this percentage, such as +2% and -1% should be allowed. The amount of air specified as 4% is thus acceptable if it is measured between 3% and 6%.

Because precast concrete units are generally erected in an above-grade vertical position, which is a moderate environment, air contents as low as 3% to 5% appear to provide the required durability. Low levels of air entrainment are preferred because the compressive strength of concrete is reduced by approximately 5% for each 1% of entrained air (when the water-cement ratio is held constant). Strength reductions due to air entrainment tend to be greater in mixtures containing more than 550 lb (250 kg) of cement per cubic yard. Because most architectural precast concrete mixtures contain a high cement factor, relatively high reductions in strength may be anticipated with high levels of air entrainment.

Apart from stating air-entraining requirements when necessary, the choice of admixtures should be left entirely to the precaster. However, the architect can request information about admixtures in the concrete mixtures proposed for the project.

As a control measure for staining of concrete due to weathering, it is recommended that maximum water absorption limits be established. This subject is covered in greater detail in Section 3.6.5.

A concrete mixture designed for purely structural reasons, or for acid-etched finishes (light exposure of aggregate), is normally fully (continuously) graded, which means that it contains all aggregate sizes (below a given maximum) in amounts that ensure an optimum density of the mixture. However, where aggregates are to be more deeply exposed by removing the cement/sand matrix from exposed surfaces, coarse aggregate in the middle size range may not be able to adhere to the remaining surface. This may leave too much matrix (sand and cement) exposed, or an uneven distribution of remaining coarse aggregate. To remedy this, exposed-aggregate panels are commonly produced using a gap-graded mixture, where one or more of the intermediate sizes of coarse aggregate are left out. This leads to a concentration of certain aggregate sizes in excess of standard gradation limits, which are normally waived for architectural concrete face mixtures, and improves the panel appearance.

While gap-grading is an established and well-proven practice, it should not be carried to extremes. This may cause separation of the paste and aggregates, creating uniformity problems, especially where the mixture is not deposited close to its final location (Fig. 3.2.8). The amount of fines, cement, and water should be minimized to ensure that shrinkage remains within acceptable limits and that surface absorption will be low enough to maintain good weathering qualities. The durability of the concrete would normally not be affected by any degree of gap-grading as long as proper concrete cover is maintained over the reinforcement. The degree of gap-grading should be based on appearance, but also related to production considerations and the weathering qualities desired for the specific exposure of the concrete.

In addition to sample approval and assessment of the concrete mixture for expected performance, the architect should check the following requirements:

1. Documentation from the precaster that the concrete mixture is properly designed for appearance, strength, durability, and weathering (absorption). Also that it is suitable for the particular panel configuration and the anticipated production techniques.
2. Materials, particularly aggregates, are suitable and available in sufficient quantities.
3. The precaster has facilities and procedures for uniform batching and proper mixing.
4. The precaster has the facilities, experienced personnel, and established quality control and record-keeping procedures.

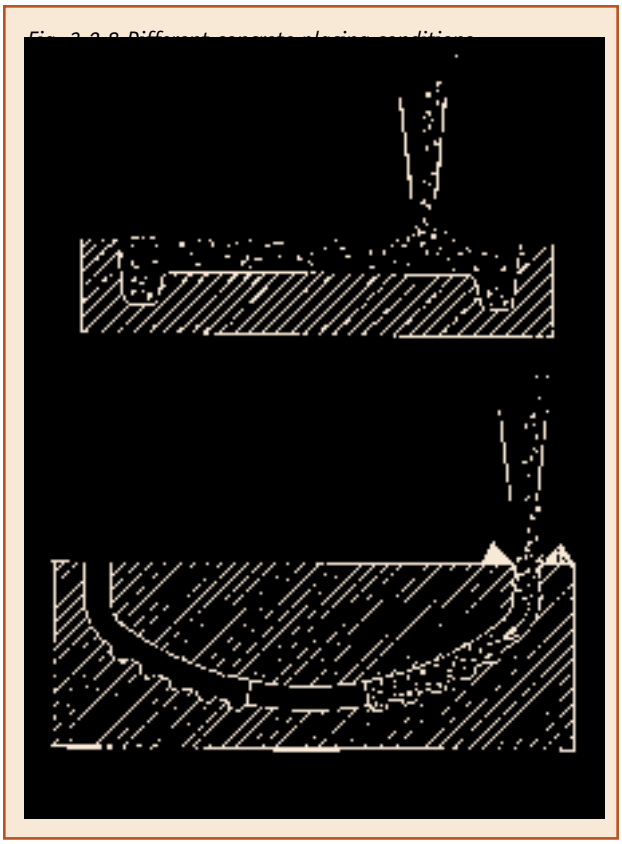

3.3 SHAPE, FORM, AND SIZE

3.3.1 Open or Closed Units

The shape of a precast concrete unit can be an important cost consideration. A major factor is whether the unit's shape can be characterized as open or closed. Precast concrete units should be rigid, to allow for easy handling; closed units afford this rigidity because of their shape. Spandrel panels are normally as easy to handle as closed shapes, although they may occasionally have large returns that require special attention.

Fig. 3.3.1 Open and closed units.

Fig. 3.3.2 Closed unit.

Fig. 3.3.3 Open and closed units.

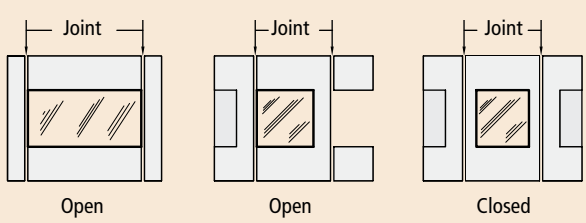

A window unit is a typical example of a closed shape; the same window unit without the sill or jamb portion is an open shape. Figures 3.3.1, 3.3.2, and 3.3.3 show examples of both closed and open unit shapes.

Open units are normally more delicate and may require temporary stiffeners or strongbacks for safe handling, which adds to cost. Also, some open panels may be difficult to store without the risk of developing excessive bowing or warping. This does not mean that open shapes should not be used; their basic weaknesses can be overcome by proper unit proportioning or by the use of stiffeners or strongbacks.

Combinations of closed and open shapes have better rigidity, but the cantilevered sections should be proportioned to minimize deflection and tolerance problems. Close tolerances must be maintained during production and curing to properly match units with open shapes during installation. The architect may help by choosing joint details that will minimize deviations (see Section 4.7.8).

The interfacing of windows and precast concrete panels is fairly simple in the case of closed shapes because connections and joint details are independent of site conditions and tolerances, and governed only by tolerances that relate to the manufacturing for the two products. In the case of open units and spandrel panels, the interfacing of windows in the façade will have to allow for slightly larger and more uncertain site-construction tolerances. Where window openings occur between such units, glazing can only be accommodated by a window frame, which considers the appropriate tolerances of the opening.

As described in Section 4.5.2, all panel connections must allow for minor movements of the panels in relation to the supporting structure. In the case of open units and spandrel panels, it is important that similar allowance for movements be designed into the panel-to-window connections and the joints between the concrete and window frame. In the case of closed panels, these movements are accommodated only in the joints between the concrete units. Also, windows in closed shapes can be installed and glazed on the ground (most often in the precast concrete manufacturer's plant), which may result in overall cost savings for the façade and reduce construction schedules.

3.3.2 Drafts

The optimum economy in production is attained if the panel can be separated from the mold without disassembling the mold. This is accomplished by providing a draft on the sides of all openings and along the edges of the panel. In establishing the shape of a panel, the designer should consider the draft required to strip the precast concrete unit from the mold, as well as the draft required to facilitate a specific finish. Generally, the minimum positive draft for ease of stripping the unit from a mold is 1:8. This draft should be increased

Fig. 3.3.4 Draft requirements.

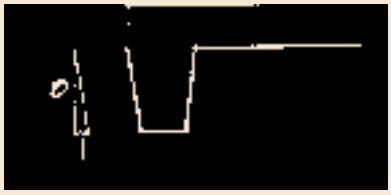

Larger positive draft for narrow member

Minimum positive draft for very narrow faces and repeated patterns such as ribbed surfaces

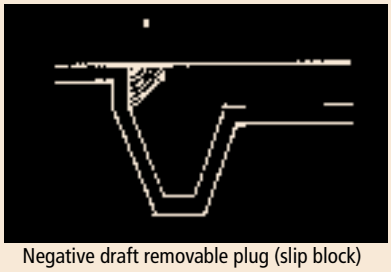

Negative draft removable plug (slip block)

for narrow sections or delicate units where the suction between the unit and the mold becomes a major factor in both strength requirements and reinforcement of the unit. The draft should be increased to 1:6 for screen units pierced with many openings, for narrow ribbed panels, for smooth concrete, and for delicate units (Fig. 3.3.4). Drafts for ribbed panels should be related to the depth, width, and spacing of the ribs.

The drafts required for finish consideration are a function of the shape of the panel, the specified stripping strength of the concrete, the mold release agent selected, the production techniques, and the desire for long-term durability. The architect is urged to consult local precasters for specific recommendations. At areas where negative draft is required, it may be necessary to incorporate slip blocks (removable plugs) to aid in stripping the precast concrete panel from the mold (Fig. 3.3.4). Vertical sides or reverse (negative) drafts will create entrapped air voids, which, if exposed, may be objectionable. Minimizing these surface blemishes will incur extra cost. Without repetition, mold and production costs increase with negative draft because a slip block would have to be incorporated with the side rail and removed with each panel during stripping or the side rail removed in order to strip the panel. When the side rail must be removed, dimensional tolerance becomes a daily variable. Before requiring a negative draft on the top of a parapet panel, consideration needs to be given to the roofing or flashing details required for the parapet and the finish. In general, the greater the draft the architect can allow, the more economical and uniform the finish. A compromise may be required between the finish and the shape of a precast concrete unit. A precast concrete unit exposed all the way around but with good draft for the use of a complete envelope mold is shown in Fig. 3.3.5.

3.3.3 Reveals and Demarcation Features

A reveal or demarcation feature is a groove or a step in a panel face generally used to create a desired architectural effect, such as separating finishes or mix-

Fig. 3.3.5
Woodrow Wilson School of Public and International Affairs–Princeton University, Princeton, New Jersey; Architect: Minoru Yamasaki.

tures (Fig. 3.3.6[a]). Another name for it is rustication or false joint. Reveals can take vertical, horizontal, diagonal, or curved forms, as well as any combination of these, and there may be several bands of them on a building. They can be narrow and delicate or deep, wide, and bold; they can offer a rectangular profile or take on any sectional shape desired, such as concave or triangular.

Fig. 3.3.6 Reveals and demarcation feaures.

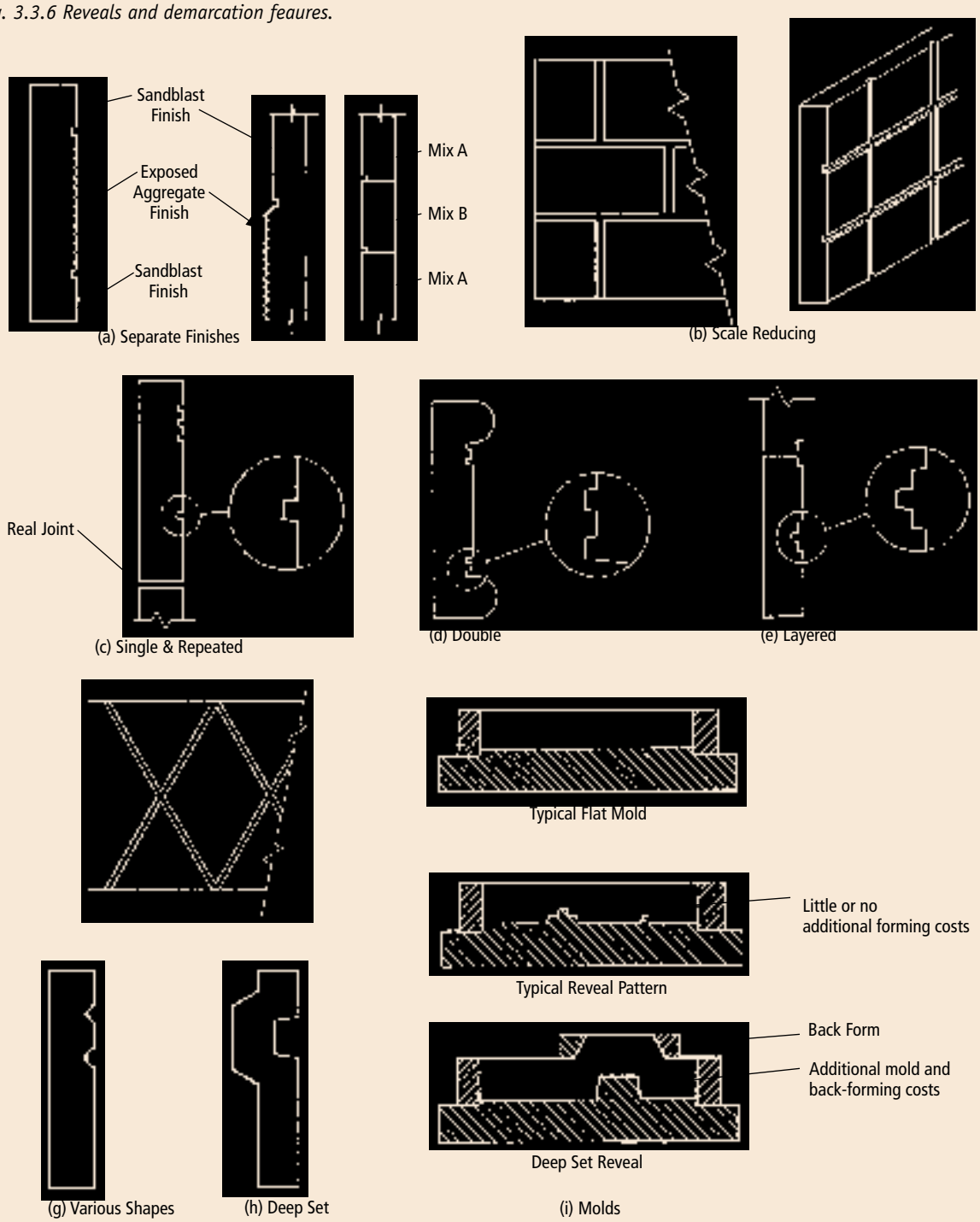

Reveals or demarcation features can add visual interest to a building clad with architectural precast concrete panels while eliminating some of the aesthetic concerns that develop when planning panel configurations. Used effectively to create shadow lines, reveals offer the simplest way to reduce the scale of large concrete panels or to keep the visual appearance from focusing on any differences that may occur in texture or coloration between panels (Fig. 3.3.6[b]).

Reveals can be single (Fig. 3.3.6[c]), double (Fig. 3.3.6[d]), layered (Fig. 3.3.6[e]), or repeated (Fig. 3.3.6[c]). They also can run in patterns (Fig. 3.3.6[f]) or feature various shapes (Fig. 3.3.6[g]). Deep-set reveals are incorporated in façades to give visual relief and may require thickened sections (Fig. 3.3.6[h]). Reveals typically measure $^1/_2$ to $^3/_4$ in. (13 to 19 mm) deep and $^3/_4$ to 4 in. (19 to 100 mm) wide, with 45° to 60° beveled surfaces allowing for ease of stripping, usually $^1/_{16}$ in. (1.6 mm) taper per $^1/_4$ in. (6.3 mm). Designers can increase the draft to articulate and manipulate the way the reveal or panel joint is perceived.

Single horizontal and vertical rustications (Fig. 3.3.7) tie the precast concrete to similar jointing in the curtainwall system. They also help to reduce the mass of the large radius precast concrete fascia. Single and double vertical and horizontal reveals were combined

Fig. 3.3.7
Ahold Information Services
Greenville, South Carolina;
Architect: Smallwood, Reynolds, Stewart, Stewart & Associates Inc.;
Photo: Kieran Reynolds Photography.

Fig. 3.3.8(a)
Adtran Corporate Headquarters, Phase IV
Huntsville, Alabama;
Architect: Cooper Carry, Inc.;
Photos: (a) Gabriel Benzur, Inc.
and (b) Steve Brock.

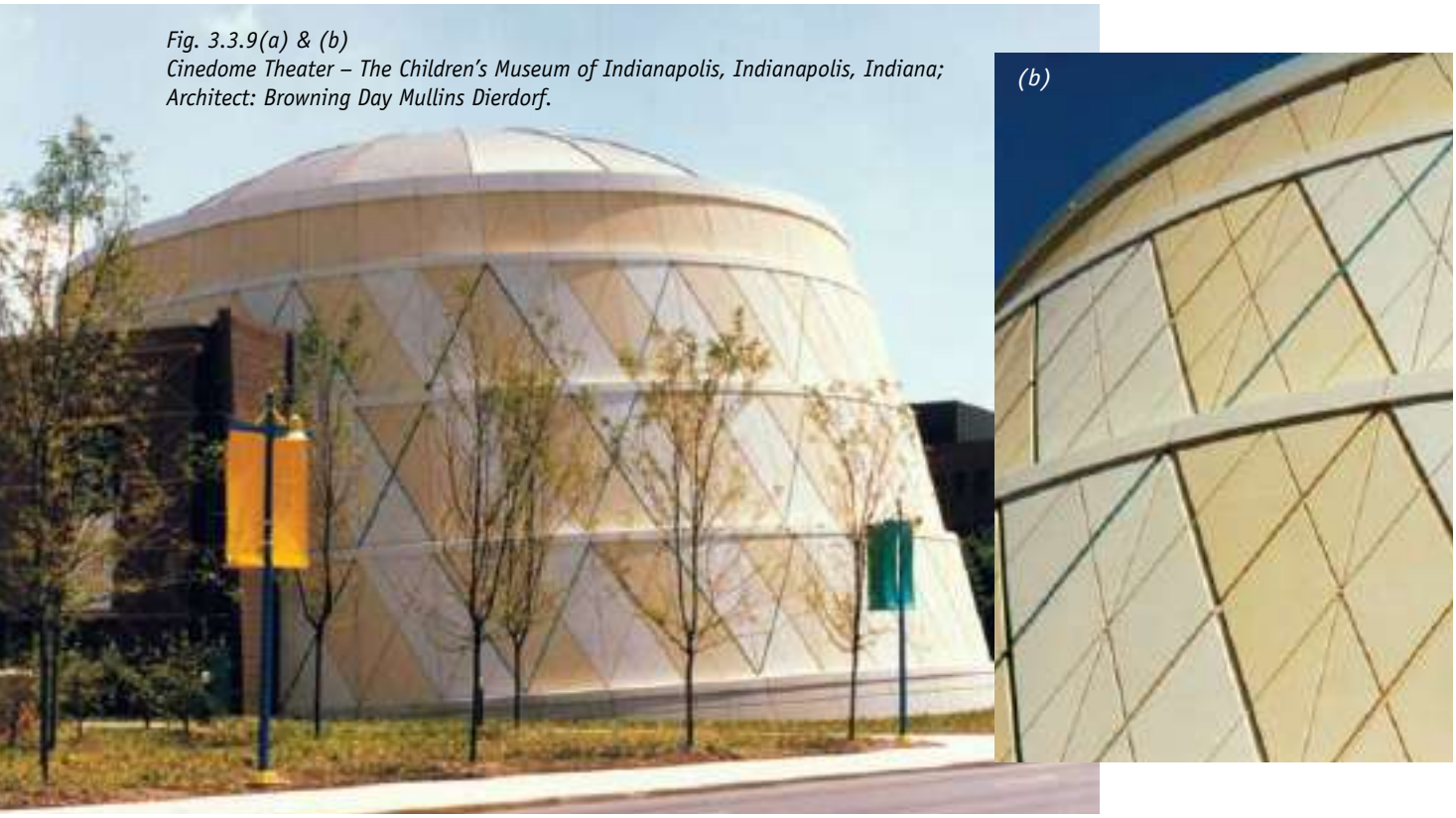

Fig. 3.3.9(a) & (b)
Cinedome Theater – The Children's Museum of Indianapolis, Indianapolis, Indiana;
Architect: Browning Day Mullins Dierdorf.

on the structure in Fig. 3.3.8(a). Figure 3.3.8(b) shows a close-up of the crisp reveal details.

A diagonal pattern of $^3/_4$ in. (19 mm) and 3 in. (75 mm) reveals were used to accent the tipped conical surface (Fig. 3.3.9[a]). In the 3 in. (75 mm) reveals, a coated aluminum accent strip was inserted at the intersection of the accent pattern (Fig. 3.3.9[b]). The panels in Fig. 3.3.10(a) and (b) were match-cast to ensure exact replication of the crossing "wave" pattern cast in the panels, which extends across the façade. About 500 pieces, encompassing 90,000 ft^2 (8400 m^2) of precast concrete, were used on the project.

Fig. 3.3.10(a) & (b)
Nordstrom Michigan Avenue
Chicago, Illinois;
Architect: Callison Architecture;
Photo: (a) Chris Eden/Callison Architecture.

The courtyard space in Fig. 3.3.11 indicates the interplay of both the boldly detailed vertical and horizontal reveals with the building forms. Care had to be taken when applying drafts for stripping, because many of the architectural precast concrete loadbearing window-box wall panels have deep returns, and many of the reveals had to line up around the entire perimeter of the project. The façade of the 21-story office building in Fig. 3.3.12 consists of two precast concrete panel types: (1) those at the lower floors with deep negative grooves, and (2) those at the upper floors with three horizontal ribs, triangular in section, with infill areas where a striated pattern is used on a 45° angle.

It is important to remember that a reveal, regardless of its depth, reduces the structural thickness of the panel. As a result, when a deep reveal is required, its location and effect on the panel's structural performance must be considered.

A longitudinal reveal has less impact on structural design than a transverse reveal because the latter decreases the primary bending strength of the panel. A horizontal reveal decreases the panel thickness across the entire width of the panel, while a vertical reveal only decreases a very small portion of the panel width.

Fig. 3.3.12
Cali International Financial Center, Jersey City, New Jersey; Architect: Herbert Beckhard Frank Richlan & Associates; Photo: Herbert Beckhard Frank Richlan & Associates.

Fig. 3.3.11
Aurora Municipal Justice Center, Aurora, Colorado; Architect: Skidmore, Owings & Merrill.

A $^3/_4$ in. (19 mm) reveal has minor consequences on panel design, and can often be accommodated by small increases in reinforcement rather than arbitrarily going to a thicker panel. Deeper reveals of 1 in. (25 mm) or more will generally require a thicker panel, resulting in extra cost.

A good rule of thumb is to have a minimum of 5 in. (125 mm) of concrete behind a reveal for large panels. However, it is important to work with both the structural engineer and the precaster to determine how deep a reveal can be before the panel thickness needs to be increased. In some cases, reveals with slightly less than the planned depth of the face mixture can be extremely economical.

Using horizontal reveals within a precast concrete wall emphasizes floor lines, ceiling lines, or roof lines. Vertical reveals can express the planning module on the building's exterior or its structural rhythm. Diagonal reveals are almost always a part of a pattern of reveals applied over the entire structure. Reveals can make openings within a wall more pronounced or less noticeable. Last but certainly not least, a combination of techniques can reduce or change the building's apparent visual scale.

Precast concrete walls, by their very nature, are made up of panels or component pieces that are assembled to create the building's structure or skin. Those pieces obviously have joints between them, and reveals' most pragmatic uses come in articulating those fun-

damental joints. These joints can be either emphasized or minimized and hidden by the creative addition of reveals. Real joints and reveals should have the same profile. Reveals are generally not caulked. Reveals other pragmatic uses come in providing drips and/or small horizontal shelves to protect openings and control moisture movement along the exterior surface of the precast concrete.

Reveals typically are designed where there are changes in the precast concrete's surface. For example, a shift in the panel's finish from smooth to textured can be emphasized using a reveal at the point where the surface texture changes. Reveals also work well where fundamental materials change within a precast concrete panel, such as from an exposed-aggregate finish to a non-exposed-aggregate finish. Reveals allow a crisp, clean transition between these different textures, finishes, or colors.

When the surface of a precast concrete element has two or more different mixtures or finishes, a demarcation (reveal) feature is a necessary part of the design. A deep demarcation separates the lightly sandblasted concrete from the exposed-aggregate center section of the panel (Fig. 3.3.13). The reveal or demarcation feature is required to keep the retarder from spreading to adjacent areas. The depth of the groove should be at least 1.5 times the aggregate size and the width should be in dimensional lumber increments such as $^3/_4$ or 1.5 in. (19 to 38 mm). The groove should generally be wider than it is deep so the panel can be stripped without damaging the mold. A single step in thickness with a reveal is sometimes used to separate surfaces, colors, and/or finishes (Fig. 3.3.6[a]).

The importance of the separation provided by a demarcation feature depends on the configuration of the unit on which the finishes are combined. For example, a groove or offset is necessary when an exposed-aggregate flat surface is located between widely spaced ribs with a different surface finish, but not necessary when a similar flat surface lies between closely spaced ribs. Proper samples should be used to assess the problem. The importance of the separation also depends on the specific types of finishes involved. See Section 3.5.7 for a discussion of finish combinations or variations on the same panel. Different face mixtures should have relatively similar behaviors with respect to shrinkage, to avoid cracking at the demarcation feature due to differential shrinkage.

If a demarcation groove occurs near a change of section, it may create a plane of weakness (potential crack) and counter any attempt to provide a gradual transition from one mass to another. It may be necessary to thicken the section to compensate for the groove or provide a more rounded groove than would normally be used. Reglets, window grooves, and false joints (rustications) will similarly reduce the effective section of the unit. In some cases, these features may determine the minimum section thickness required for the unit.

Lastly, reveals can be placed where there are directional changes in the precast concrete surface, such as between a vertical surface and cornice or bullnose detail. These elements within a wall design can be emphasized or de-emphasized through the use of reveals.

Reveals can be much more than a joint or line of demarcation between textures or finishes. Designing reveals in varying shapes, sizes, and depths for a precast concrete wall can transform what initially might be considered a mundane, solid surface into a rich texture of shade and shadow, bringing visual interest to the building's façade.

Fig. 3.3.13
The Westin Hotel, Copley Place
Boston, Massachusetts;
Architect: The Architects Collaborative Inc.;
Photo: The Architects Collaborative Inc.

3.3.4 Sculpturing

Today, buildings are more sculptural in form, with a trend toward more organic expressions. There is greater freedom in the design of the façade. Volumes, surfaces, lines, and difference in planes are becoming increasingly important in providing architectural interest. Designers are conceiving of form organically, generating fluid surfaces in place of rigid structures. Design focuses on space, structure, and proportion. Architectural precast concrete provides the designer with virtually complete sculptural freedom and flexibility in shaping concrete into an articulated structure.

Fig. 3.3.15
461 Fifth Avenue, New York, New York (1989);
Architect: Skidmore, Owings & Merrill;
Photo: Wolfgang Hoyt/Esto Photographics.

Taking advantage of precast concrete's moldability in creating surface architecture can add considerable aesthetic appeal to a project.

One of the most important properties of concrete is its moldability. Concrete is really like sculptor's clay in an architect's hands. A wide range of shapes is possible. Concrete shapes are not limited to volumes enclosed within plane surfaces: they may also be radiused or rounded.

Fig. 3.3.14
55 Park Place
Atlanta, Georgia;
Photos: George Spence.

Fig. 3.3.16
Moscone Convention Center Esplanade Ballroom
San Francisco, California;
Architect: Gensler/DMJM, Associated Architects (joint venture).

Sculptured panels can produce building façades with distinctive, strongly modeled elevations having flat interior wall surfaces. High and low relief, straight-line geometric patterns, and practically any free-form shapes are possible. The light and shadow effect achieved by sculpturing the exterior surface produces the major visual effect of precast concrete units. Textures and colors are only of secondary importance when a building is viewed in its entirety or from a distance (Fig. 3.3.14). The intricacy and depth of articulation of the façade in Fig. 3.3.15 provides a feel similar to the terra cotta buildings built at the turn of the century.

Precast concrete panels and precast concrete planter walls are highly articulated with horizontal bullnose bands, deep reveals, and strongly expressed horizontal joints (Fig. 3.3.16). A large number of horizontal setbacks was used in an attempt to de-emphasize the building size, while still establishing a strong architectural presence in the complex.

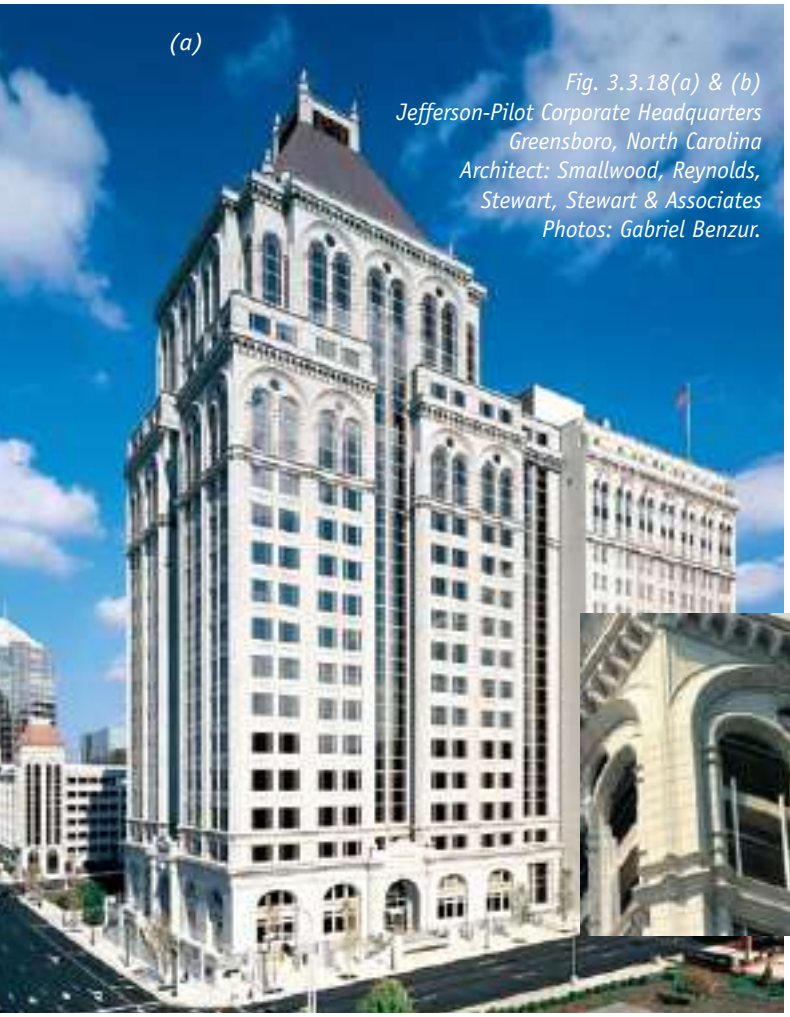

Fig. 3.3.18(a) & (b)
Jefferson-Pilot Corporate Headquarters
Greensboro, North Carolina
Architect: Smallwood, Reynolds, Stewart, Stewart & Associates
Photos: Gabriel Benzur.

Fig. 3.3.17 Molds–Sculpture, form liner, letering.

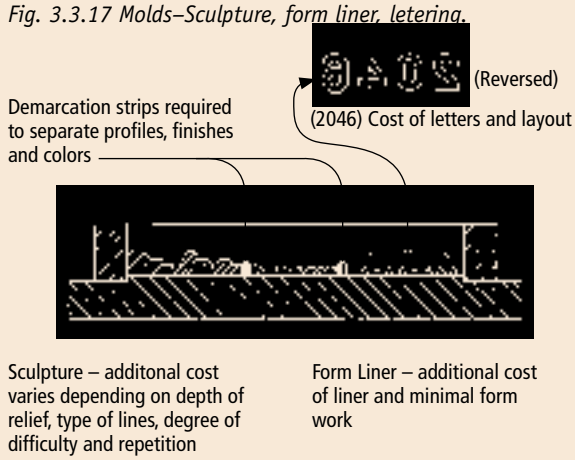

Considering the variety of precast concrete's sculpting options ensures that its full advantages are used in designing a façade. These options not only add visual interest and visually reduce the building's mass but they also can customize the building to add personality and personalization.

Complex shapes and configurations of precast concrete units may not create a cost premium if sufficient repetition of the unit minimizes the mold costs and where the sculpturing of the shape aids the unit's structural capacity. See Fig. 3.3.17 for the effects of sculpturing on mold costs.

A new headquarters building was needed to complement an existing headquarters, a Romanesque revival-style building constructed in 1924 that is adjacent to the proposed site (Fig. 3.3.18[a]). The original building was clad in terra cotta tile consisting of 40 to 50 unique shapes, ornate decorations, and embellishments. The components and design elements of the existing historical building were analyzed and interpreted into a system of components appropriate for fabrication into precast concrete panels. The new 20-story building has a traditionally styled precast concrete façade with elaborate detailing, colored and formed to resemble the weathered terra cotta of the original structure. Each piece was designed with false joints, which gave the illusion of hand-carved stone and diminished the effect of color variations. By using precast concrete panels, a more apparent degree of depth, detail, and richness of the ornate designs was achieved (Fig. 3.3.18[b]).

Fig. 3.3.19
Citicorp Tampa Campus
Tampa, Florida;
Architect: HKS Architects Inc.;
Photo: Michael Lowry Photography.

Sculpturing may increase structural strength of the precast concrete units and, therefore, simplify handling. The panels should be shaped for sufficient stiffness in the direction of handling-induced stresses. Precast concrete panels molded around windows are often set forward of the glazing, adding stiffness and giving sculptural form. Sculpturing also may increase the depth-to-span ratio through ribs or projections in either direction of a unit (Fig. 3.3.19 and 3.3.20). The depth of panels is defined as the thickness and the span would be either the height or width of a unit. With sufficient panel repetition, and where the depth and volume of the projections do not exceed the optimum required for handling, there should be no cost premium beyond the cost of the added volume of materials.

The projections do not have to be continuous or straight, but may be overlapping or curved. Projection design should avoid creating a weak section within the units. Projections may not add to structural capacity when they are interspersed between weaker sections.

Ribs may be part of the architectural expression or, where flat exterior surfaces are required, ribs may be added to the back of panels for additional stiffness. Although backforming for the rib on the back of panels is an added expense, it may be necessary to reduce the weight of the panels. In certain light finishes, such as acid-etched or light sandblast, a temporary shadowing of ribs may be visible. In units with ribs in only one direction, the dimension in the other direction might either be shortened or strengthened by using ribs on the back. A panel may have reasonable stiffness in the vertical direction but be weak horizontally. The precaster may choose to improve the structural strength by incorporating a concrete rib.

In most cases, dimensions of ribs will be determined as part of the architectural features of the units. Minimum dimensions are determined by design; and practical considerations are treated in detail in Section 4.2.9.

The visual impact made by the relief sculpture depends mainly on two factors: profile and lighting. The profile or cross-section should consist of strong elements with edges that produce well-defined highlights and shadows. Surfaces that flow smoothly into each

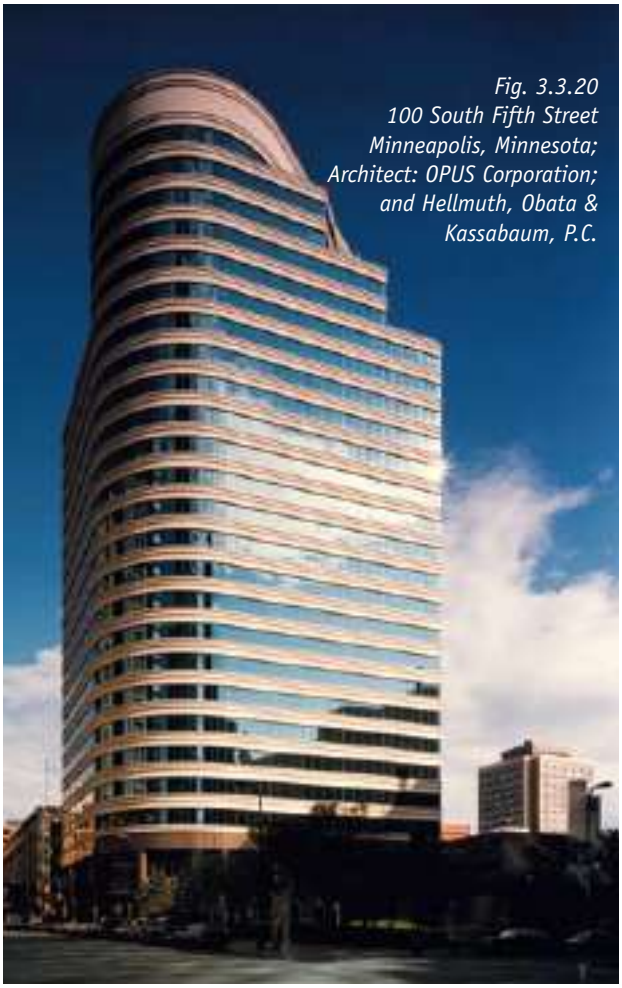

Fig. 3.3.20
100 South Fifth Street
Minneapolis, Minnesota;
Architect: OPUS Corporation;
and Hellmuth, Obata &
Kassabaum, P.C.

Fig. 3.3.21(a - g) Various patterns integrated into formwork.
Nimitz-MacArthur Pacific Command Center, Oahu, Hawaii; Architect: Wimberly Allison Tong & Goo Design; Photos: Gary Hofheimer Photography.

other should be avoided. A bold treatment is most effective with subtle or gradual changes in the profile. These limitations are very important for the cross-section, but do not apply to the front or elevation view of the design. If it is possible to control lighting, make sure it plays across the relief from the side rather than straight from the front.

Relief sculpture can be enhanced by contrasting surfaces on projecting elements with textures on the background.

The viewing distance of the surface should be considered when deciding on the scale of the relief. As a rough guide, design elements smaller than about $^{1}/_{300}$ of the viewing distance are difficult to "read" and tend to get visually lost in their surroundings.

The use of precast concrete in public art applications is growing in popularity. A wall with creative images reduces the visual scale of the panels and turns the wall into a work of art.

An example of relief sculpture is shown in the panels for the building in Fig. 3.3.21. The design intent of the two-toned, colored precast concrete façade was to capture the Hawaiian architectural style as it relates to the natural elements, such as earth, water, mountains, and sky. These elements are picked up in the different levels of the façade in the form of stone textures, waves, multi-level reveal patterns, three dimensional pineapple leaf patterns, fluted mullions, heavy cornices, dentils, bullnoses, ribs, and the navy globe symbol that was sculptured and integrated into the formwork (Fig. 3.3.21[a] to [g]). All of these were accomplished using various types of forming materials best suited for a particular situation, including steel, fiberglassed wood, urethane liners, milled plastic, and sprayed fiberglass.

Fig. 3.3.22
Level 3 Communications
Needham, Massachusetts;
Architect: HLW-Thomson Design;
Photo: Peter Paige.

Between thin brick–clad precast concrete panels reside feature panels of architectural precast concrete with the stylized design of a computer circuit board (Fig. 3.3.22). It is replete with stainless steel "chip" mounted at the center of the panel and acts as an indirect lighting fixture, which, at night, splays light across the molded surface of the circuit board panel, illuminating each raised feature. From the "chip" emanates circuit details that flow across the surface of the panel to align with either the 4 ft (1.2 m) brick panel module horizontally or vertically to stylized "transistors" cast as entablatures above and below the chip.

Fig. 3.3.23
Tropicana Casino Addition
Atlantic City, New Jersey;
Architect: Ellerbe Becket formerly Welton Becket & Associates;
Photo: Ellerbe Becket.

Figurines for the murals were cast in five separate molds 4 ft × 7 ft 6 in. (1.2 × 2.3 m) and set into an 8 ft × 15 ft (2.4 × 4.5 m) wood mold before casting the final panel (Fig. 3.3.23). Figurine panels are 6 in. (150 mm) thick and the figures project up to $1^1/_2$ in. (38 mm) from the flat areas.

The butterfly sign at the entrance to the parking structure was replicated in the precast concrete spandrel panels (Fig. 3.3.24).

Fig. 3.3.24
The Parking Gallery, Reno, Nevada;
Vicki Scuri, Sculptor;
Photo: Vicki Scuri.

3.3.5 Bullnoses, Arrises and Radiused Precast Concrete

The bullnose offers a useful tool with which architects can increase visual interest by adding dimensionality and allowing the design to avoid simple flat surfaces. Three-dimensional pieces that extend from a flat surface change the reading and proportion of that surface. The light and shadow variations achieved with a bullnose produce a major visual impact and contrast when a building is viewed from a distance. Also, shadows cast by a horizontal bullnose profile create strong lines that reduce the apparent height of the structure.

Bullnoses may be designed in a variety of sizes. As the bullnose increases in size, it adds weight and cost to the panel, primarily due to the expense of the mold. Here are some key points to remember when designing bullnose components. For each item, the letter corresponds to Fig. 3.3.25 that shows the discussed aspect:

(a) The basic bullnose is 180 degrees, or a half-circle.

(b) Multiple bullnoses can be used within a panel.

(c) The bullnose can be elliptical.

(d) A reveal (rustication) may be placed at the intersection of the bullnose and the panel field to accentuate the bullnose. The reveal may also be used to separate dissimilar mixtures and/or finishes.

(e) A partial bullnose may be designed.

(f) A return may be incorporated with the bullnose.

(g) A half-circle cove.

(h) The convex bullnose may be partial.

(i) The bullnose may feature a finish transition (similar to [d]).

(j) Arrises (shapes) may be rectilinear or pointed. They may protrude or be inverted similar to items (a) through (i). They also may be combined with bullnoses.

The architectural features on the panels in Fig. 3.3.26 include bullnoses with three different radii ($6^1/_2$, 3, and $1^1/_2$ in.) [163, 75, and 38 mm]. Also included are $^3/_4$ in. (19 mm) deep horizontal reveals. Light and deep sandblast finishes gave the panels two complementary colors and textures.

The panels in Fig. 3.3.27 use two finishes to create a banded appearance that accentuates the horizontal expression. A heavy bullnose is incorporated into the spandrel panels to create a window sill and reinforce the horizontality of the wall, as well as add texture to the wall.

Fig. 3.3.25 Bullnoses and Arrises.

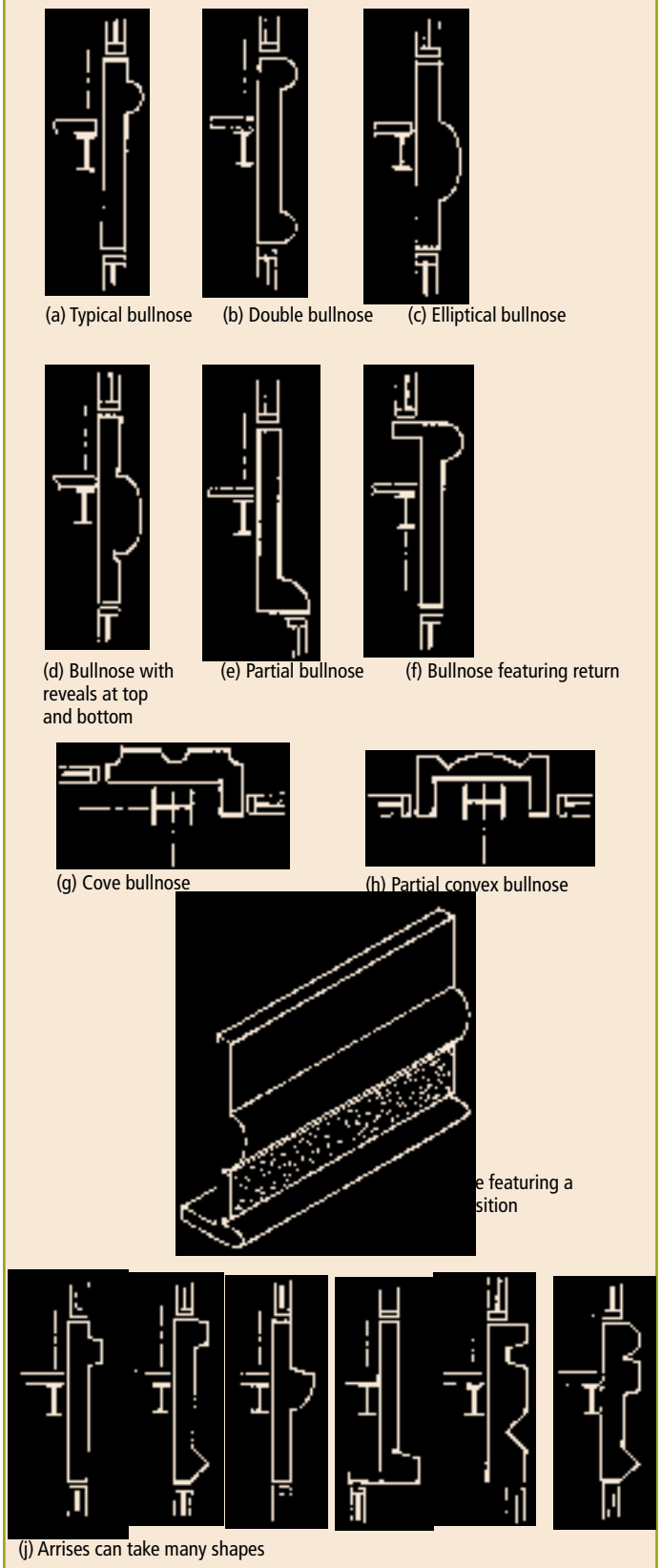

Fig. 3.3.26
Pioneer Place Block 50, Portland, Oregon;
Architect: E.L.S. Architecture and Urban Design.

Fig. 3.3.27
Parkway Plaza, Greenville, South Carolina;
Architect: Urban Design Group Inc.;
Photo:Urban Design Group Inc.

The large and small diameter bullnoses over the windows in Fig. 3.3.28 do not extend across the entire panels. The profile of the upper-floor white concrete spandrels in Fig. 3.3.29, however, includes a large diameter bullnose running the length of the floor line. The bullnose provides a graduation between light and shadow in the powerful desert sunshine, where shadow-lines are extreme: a deep darkness contrasted with bright sunshine.

Adding bullnoses along each window ledge added vari-

Fig. 3.3.28
Westwood Executive Center
Westwood, Massachusetts; Architect: Sasaki Associates Inc.;
Photo: Desroches Photography.

Fig. 3.3.29 City Center West, Las Vegas, Nevada; Architect: Urban Design Group Inc.; Photo: Urban Design Group Inc.

Fig. 3.3.30(a) & (b)
Hyperion Wastewater Treatment Facility, Los Angeles, California; Architect: Anthony J. Lumsden & Associates; Photos: Anthony J. Lumsden, former, corporate director of design for DMJM.

ety to the design, improved the proportions of the façade, and created changing light patterns during the day (Fig. 3.3.30[a]). As part of the same project, large bullnose components added to the parking structure provided a distinctive visual element that tied it to the other buildings in the project without mimicking their exact look (Fig. 3.3.30[b]).

The fundamental appeal of the bullnose form in precast concrete design comes from its ability to visually reproportion an uninteresting, flat surface. The bullnose can also be used to develop more complex forms in combination with bullnose shapes of different radii or in combination with convex, concave, or flat sectional shapes.

Radiused shapes are generally more costly than flat surfaces, because of the additional work required to manufacture the mold and to place the reinforcement, connection hardware, and concrete. See Fig. 3.3.31 for a discussion of factors affecting production costs for radiused units and Fig. 3.3.32 for applications of various radiused elements.

Some architectural forms that are not flat can be difficult to achieve. However, forms that are cylindrical in nature, forms that have surfaces generated from a sectional shape that are consistent throughout the length of the mold, are simple to form. These forms that are consistent sectionally allow multiple castings and are economical to fabricate because attached pieces are identical and easy to install. Molded shapes that have curvatures about both axes are difficult to fabricate, difficult to install, and have limited repetitive applications.

Fig. 3.3.31 Molds.

A: Typical mold

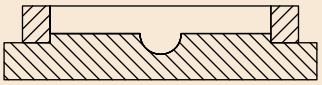

B: Bullnose — some additional form costs

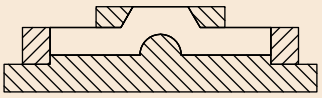

C: Inverted arrise — additional formwork plus labor to daily remove and replace back pans

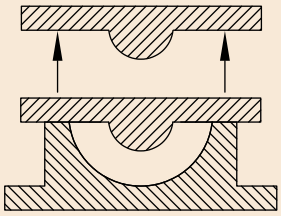

D. Column cover — more complex formwork plus additional labor daily to remove and replace the back pan.

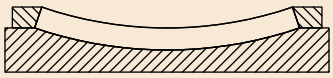

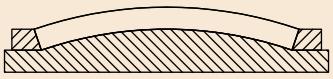

E: & F: Gradual radius — additional forming and additional labor to back finish

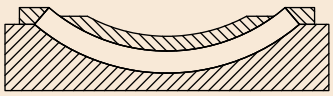

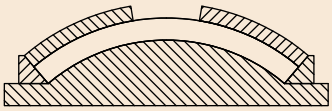

G: & H: Extreme radius — more complex formwork with sequential back pans that must be removed and replaced daily. Also, casting time takes longer and some back finishing is required

Fig. 3.3.32 Examples of radiused units.

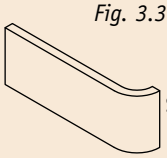

Soften a building return; partial Mold G

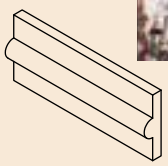

Form a bullnose; Mold B

Photo: Gabriel Benzur.

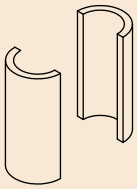

Enclose a structural member; Mold D

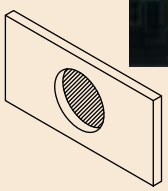

Form a circular window or opening

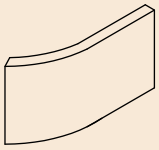

Create a building extension; Mold E & G

Photo: Gabriel Benzur.

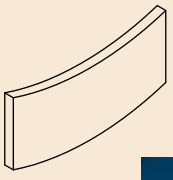

Form a concave building corner; Mold F & H

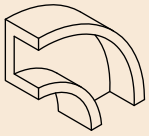

Create a combination such as an arched roof member including a beam surround

Create an undulating surface using a combination of Molds E & G; Molds F & H

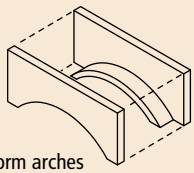

Form arches

Photo: Rick Alexander & Associates, Inc.

Form an inverted arrise; Mold C

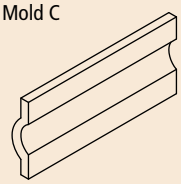

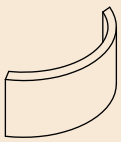

Form convex building corners; Molds E & G

Photo: ©Anton Grassel.

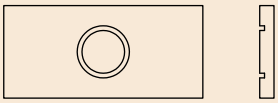

Create circular patterns with reveals

Fig. 3.3.33 Examples of cornices and eyebrows.

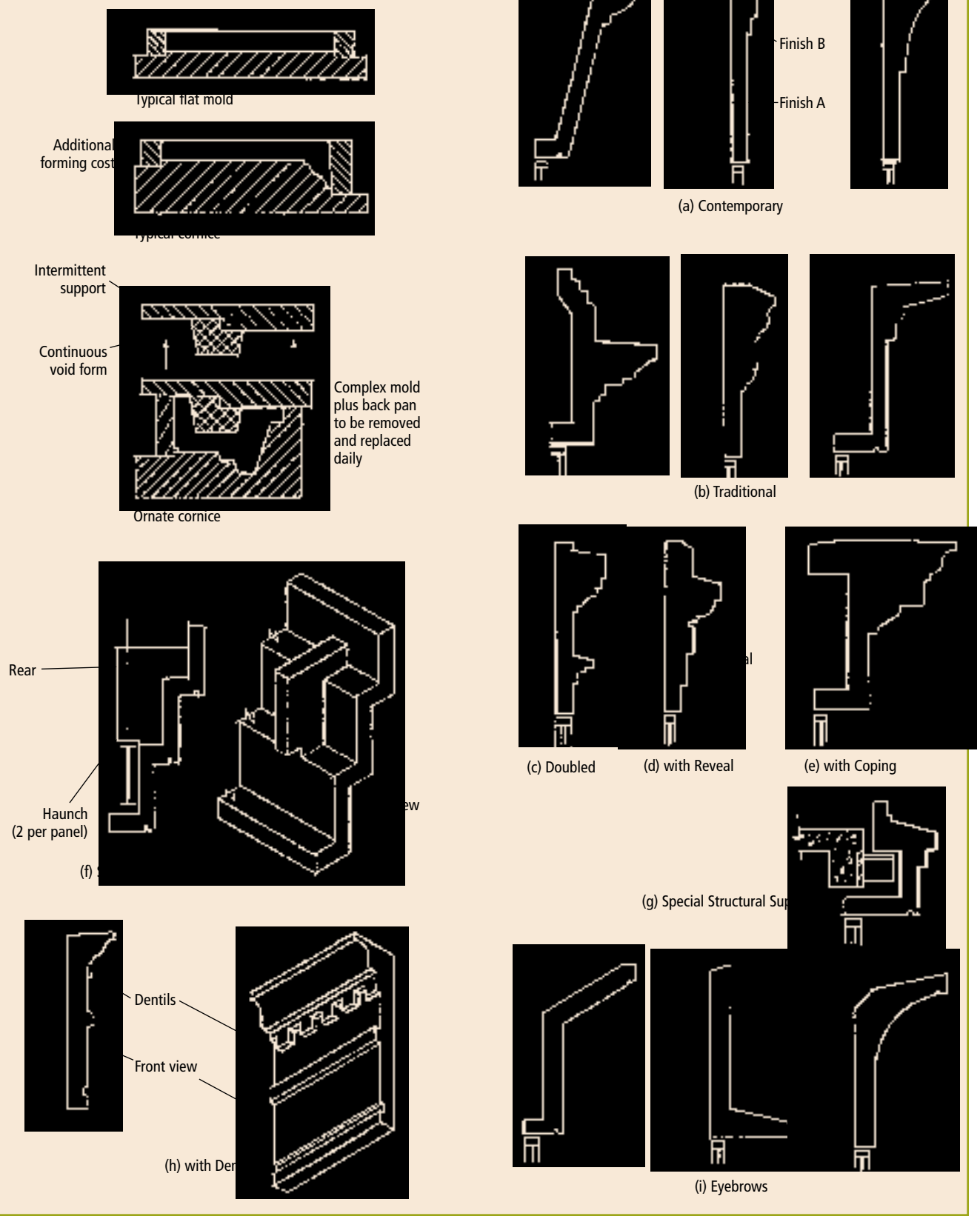

3.3.6 Cornices and Eyebrows

A cornice, as an element of the façade, has three primary functions:

- It provides "the termination" of the vertical spread of the building. It's the top, pure and simple.
- It provides a balance and proportion to the entire façade, acting as a counterweight to the aesthetically heavier base of the building.
- When cantilevered 12 to 24 in. (300 to 600 mm) away from the plane of the main façade, the cornice serves a function, acting as a rain shield for the upper floors and helping to minimize dirt streaking and water stains.

A cornice consists of a horizontally projecting overhang comprising multiple surfaces, planes, and profiles with thousands of variations. It usually is located along a parapet or at the top of a given plane. The cornice crowns or finishes the part to which it is affixed.

When used as a horizontal projecting element that is not situated at the building's top, the traditional cornice-shaped element becomes an "eyebrow" or "shelf" offering additional aesthetic proportion and definition to the entire façade. If one believes that buildings encompass the three basic parts of base, middle, and top, these eyebrows can define the transition from one part to another or provide the transition from one type of building element to another, such as with articulated column capitals.

Today's architectural vocabulary also might employ this device as a light shelf (reflecting light) or shadow maker, as it can shade windows from sun and rain, reducing energy costs and other internal shading needs. Either will develop interesting and ever-changing light and dark patterns on the surfaces below.

Whether used as the top piece or as an eyebrow, the architectural precast concrete cornice shape offers architects a multitude of design possibilities. For instance, a cornice easily can cantilever past the structural roof slab or project away from the façade's plane without needing complex additional support. When the design emphasis articulates a "heavy, large expression at the top of the building," precast concrete pieces can accomplish both the aesthetic and the functional needs of this concept.

Cornices can be used in a variety of styles and combined with several different components to achieve different purposes. Options in Fig. 3.3.33 include cornices that are:

- Made to look contemporary (a).
- Made to look traditional (b).
- Doubled to create even more design interest (c).
- Incorporated with a reveal (d).
- Cast with a void form to reduce weight or with coping on the crown ([e] and [g]).
- Created so large that it requires special support. For instance, a steel structure may require bracing to prevent rotation of structural members ([f] and [g]).
- Incorporated with dentils (h).

Mold costs for either cornices or eyebrows will depend on the degree of complexity and the size of the projection (i). Both cornices and eyebrows (i) may be continuous, interrupted, arched, or peaked. Dissimilar finishes may be used on adjacent surfaces (a). When detailing cornices attention needs to be paid to the window washing system to avoid damage to the cornice. A montage of various cornice styles is shown in Fig. 3.3.34.

3.3.7 Edges, Corners, and Returns

Each individual project requires special attention to the design and detailing of its corners to create optimum appearance, jointing, and economy. For this reason, corner detailing should be decided early. Economy results when the building elevations are designed from the corners inward, using typical panels and avoiding special-sized end or corner pieces. Typical corner treatments, such as a mitered edge or a 12 in. (300 mm) corner return, usually influence all corner pieces for the project. Isometric sketches of the building that show panel layout will help define areas where corner panels are needed.

All edges of precast concrete units should be designed with a reasonable radius, chamfer, or quirk, rather than leaving them as sharp corners. This is particularly important where the panels are close to pedestrian or vehicular traffic. The size of the edge's radius should be discussed with the local precaster. Determining the optimum size depends on the selected aggregate size, mold materials, and production techniques. When the edge is sharp, only fine aggregate collects in these

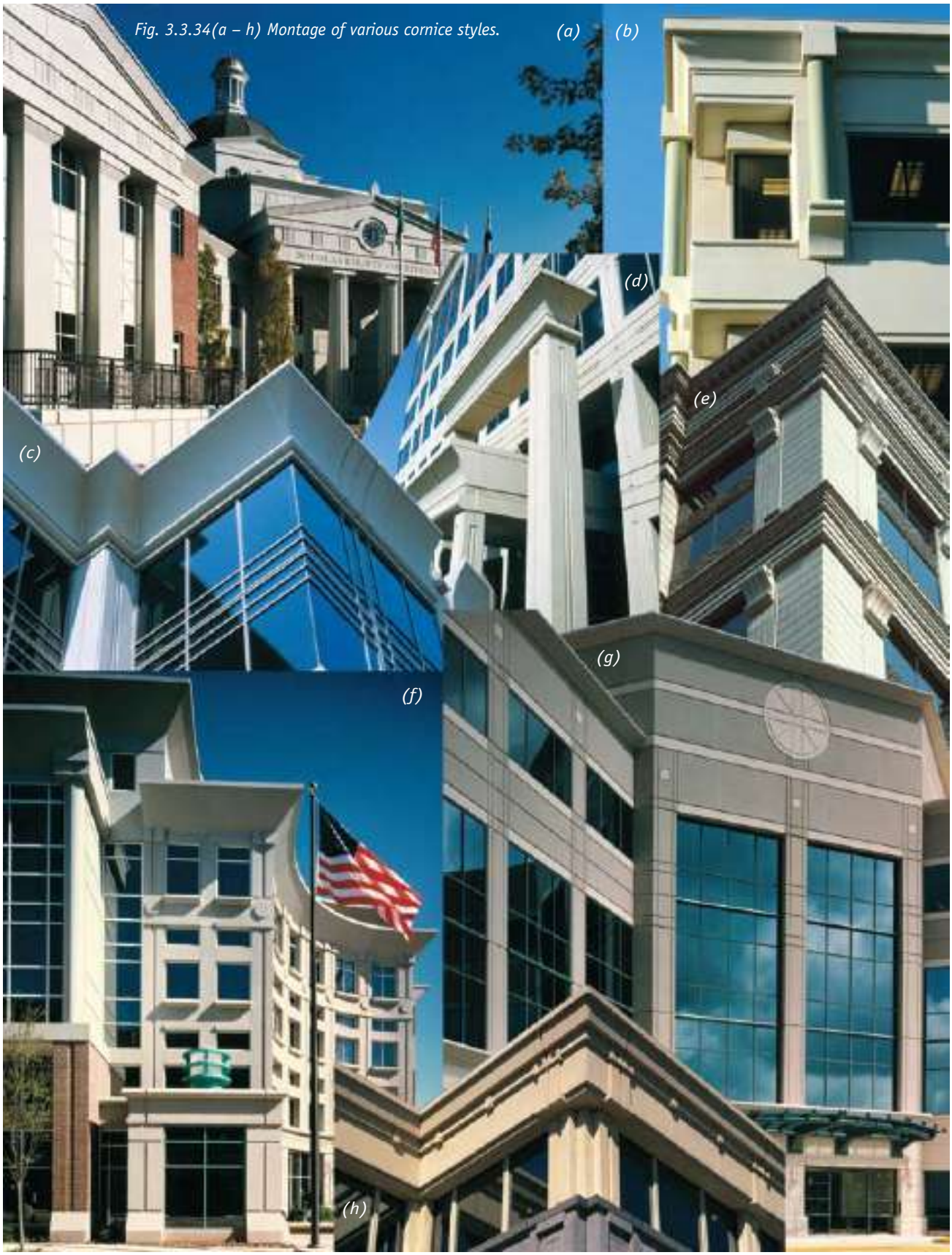

Fig. 3.3.34(a – h) Montage of various cornice styles.

Photos: (a) Gabriel Benzur Photography; (b) Cathers & Associates, Inc.; (c & d) Brian Gassel/TVS; (e) Grodon Dilgore; (g) James Oesch Photography/Donnally Vujcic Associates, L.L.C.; (h) Lambros Photography Inc.

Fig. 3.3.34(a – h) Photo credits

Fig. 3.3.34(a) Douglas County Courthouse, Douglasville, Georgia; Architect: Cooper Carry & Associates.

Fig. 3.3.34(b) 2201 Renaissance Corporate Center, King of Prussia, Pennsylvania; Architect: Cathers & Associates Inc.

Fig. 3.3.34(c) & (d) 2300 Lakeview Parkway Building, Alpharetta, Georgia; Architect: Thompson, Ventulett and Stainback Associates (TVS).

Fig. 3.3.34(e) Resurgens Plaza, Atloanta, Georgia; Architect: Smallwood, Reynolds, Stewart, Stewart & Associates, Inc.

Fig. 3.3.34(f) St. Charles County Courts Administrative Building, St. Charles, Missouri; Architect: Sverdrup Facilities Inc.

Fig. 3.3.34(g) Presidents Park, Hendon, Virginia; Architect: Donnally, Lederes, Vujcic, L.L.C.

Fig. 3.3.34(h) Leaf North America Corporate Headquarters Lake Forest, Illinois; Architect: Loebl Schlossman & Hackl/Hague Richards.

locations and this weakens the edge. Voids also occur due to the interference of larger aggregate. Sharp corners chip easily, both during handling and during service on the finished building. Chamfered or radius edges also mask minor alignment irregularities of the precast concrete panels. For typical edge details, see Fig. 3.3.35.

Fig. 3.3.35 Typical edge details.

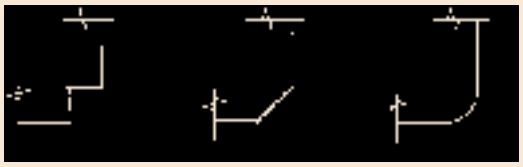

Mitered corners without quirks are difficult to manufacture and erect within tolerances that are acceptable from either an appearance or a jointing standpoint. Concrete at mitered corners cannot be cast to a sharp 45° point because of the size of the aggregates. Therefore, this edge must have a cut-off or quirk (Fig. 3.3.36). A table showing the recommended size of the quirk return for different panel-joint sizes is included in Fig. 3.3.36. The size of the quirk return should never be less than $^3/_4$ in. (19 mm), nor less than 1.5 times the

Fig. 3.3.36 Quirk miter dimensions (in inches).

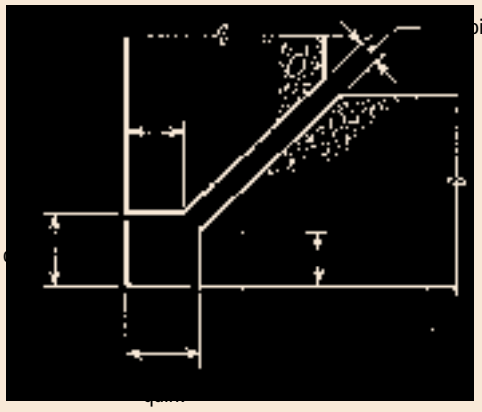

A	B	C
1-1/4	3/4	3/4
1 1/2	1	3/4
1-3/4	1-1/4	3/4
2	1-1/2	3/4
1-1/2	13/16	1
1-3/4	1 1/16	1
2	1-5/16	1

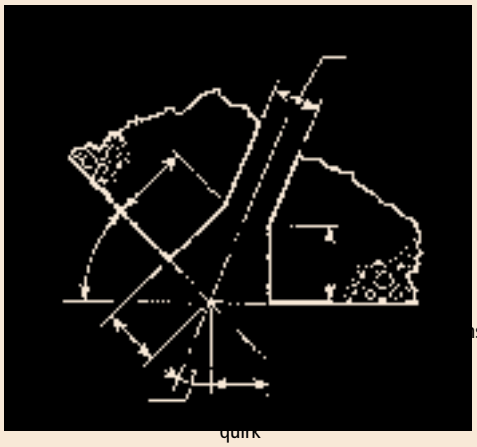

A	B	C
3/4	13/16	3/4
7/8	1-1/16	3/4
7/8	13/16	1
1	1-1/16	1

Fig. 3.3.37
Times Publishing Company, St. Petersburg, Florida;
Architect: TRO Jung/Brannen Associates, Inc.;
Photo: George Cott/Chroma Inc.

maximum size of the aggregate used in the concrete mixture. Normally a $^3/_4$ to 1.5 in. (19 to 38 mm) quirk will read as a well-defined edge on the corner of the building. A well detailed and fabricated miter and a quirk miter are shown in Fig. 3.3.37.

Even with good-sized quirk returns, a mitered corner may cause the panels to converge at the top, bottom, or center, depending on the vertical configuration of the panels. If the building design demands corners with mitered edges, the architect is urged to specify a mockup of the two initial corner panels at the precast concrete plant before approving the panels and releasing the balance for production.

How the precast concrete is being used and the type of panel that is turning the corner determines how the building corners and major component edges will be designed. Figure 3.3.38 shows typical corner and return details.

Flat panels, used either to visually define the dimensioned mass of building-block elements or to create flat or curvilinear planar surfaces, are treated differently than panels with heavily articulated horizontal treatment using deep relief reveals or profiles. Visual focus at the corners often is part of a design approach where the wall plane is stopped or interrupted at the building corner or the corner is emphasized to define the building form.

Fig. 3.3.38 Typical corner and return details.

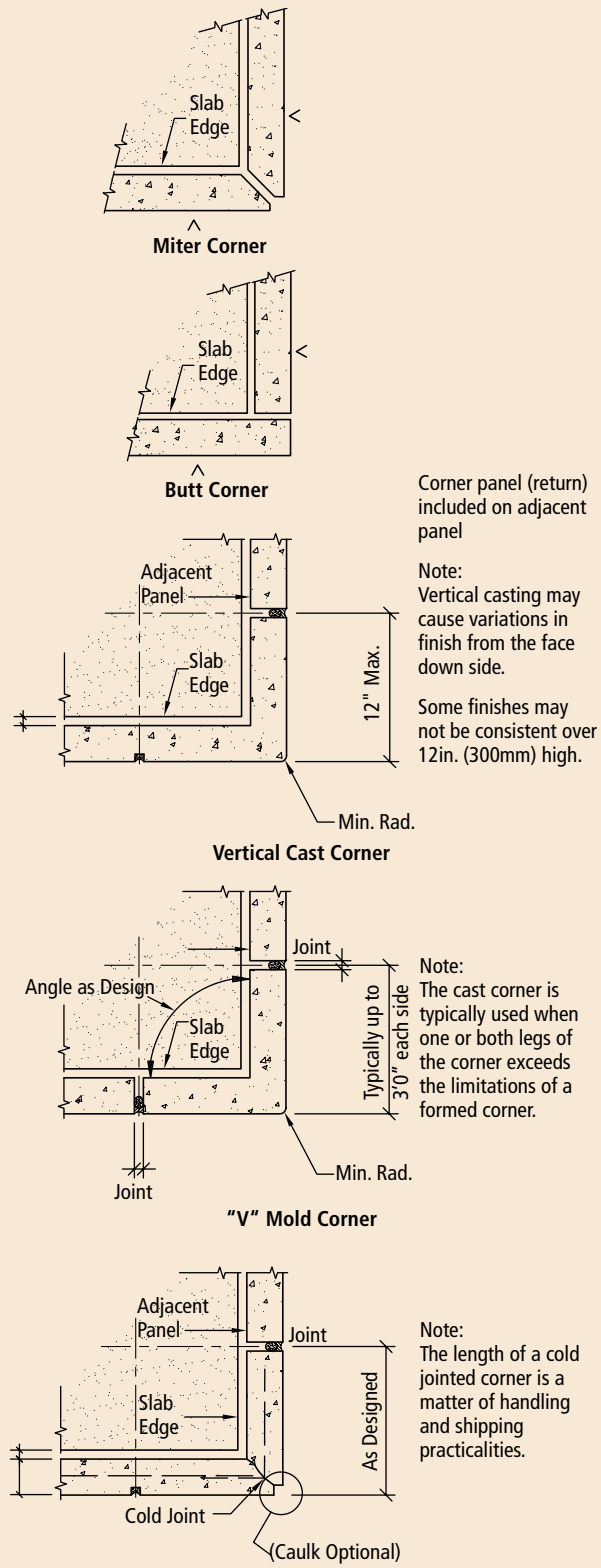

Contact precaster to determine the best solution and cost implication of detail.

Quirk miter corners, channel shapes with returns, and two-stage precasting all have achieved the desired result, often with modifications contributed by the precaster that benefit both the finished design and the budget.

The projects in Fig. 3.3.39(a) through (j) illustrate various corner treatments. Providing a visible expression of the building panel or unit width as it turns the corner gives substance and thickness definition to the material. The heavily rusticated panels in Fig. 3.3.39(a) are thickened flat panels with a deep quirk return, in the range of 3 in. (75 mm), to economically create a perceived dimension in the panel as it turns the corner. A similar deep-quirk miter is used in Fig. 3.3.39(h) for both a return dimension and emphasis on the corner.

When the panel thickness itself is to be expressed, a butt joint around the corner at the back of the panel is sufficient without a return. In Fig. 3.3.39(b), one-piece, channel-shaped covers with relatively shallow returns were used to imply a thickness somewhat greater than the actual panel thickness. In this case, well-executed "sharp" corners in the casting add to the solid appearance. In Fig. 3.3.39(c), two-stage cast covers with deep returns were used for solid-block treatments of the piers. The two-stage precasting allows a unique cast-in-surface texture to be carried around the corners of the blocks to a much deeper dimension. Minimal corner dry joints without quirks complete the appearance of a solid unit.

Fig. 3.3.39(a – j) Various corner treatments by Thompson, Ventulett, Stainback & Associates (TVS), Architects; Photos: Brian Gassel/TVS.

1335 Windward Concourse, Atlanta, Georgia

McCormick Place Expansion, Chicago, Illinois

55 Farmington, Hartford, Connecticut

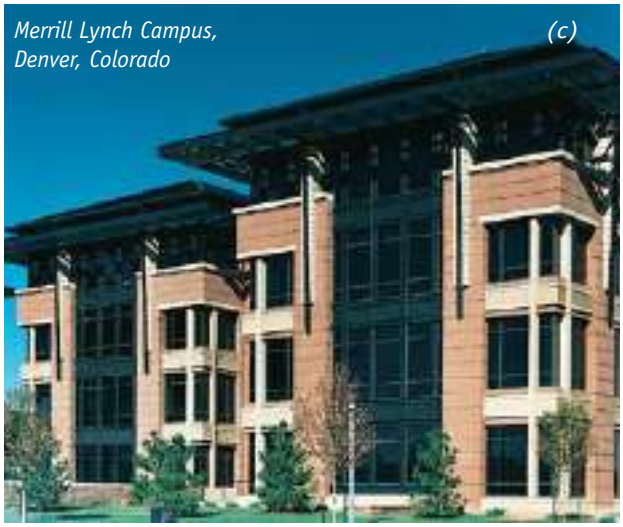

Merrill Lynch Campus, Denver, Colorado

When the wall surface is treated as a planar surface, smooth or articulated, the goal usually is to make the transition around the corner as smooth and continuous as possible. This often involves moving the joint from the prominence of a corner location, especially with smooth panel faces. Figures 3.3.39(d), (e), and (f) illustrate situations where a solid-appearing corner is preferred. This allows the smooth surface to carry around the corner uninterrupted and without calling attention to the corner.

The flat wall plane in Fig. 3.3.39(d) changes direction without corner articulation by using a shallow angle return for single casting and placing the joints at the back

McCormick Place Expansion, Chicago, Illinois

ADP Building, Atlanta, Georgia

angles where they are de-emphasized. The shallow corner angle allows a solid cast edge. In Fig. 3.3.39(e), the returns on the column enclosures are not intended to imply a material thickness of panels or blocks but to provide a planar wrap of the surface forming the corner. The joint is located at the pier's center to provide a linear continuation of the element above the pier. A two-stage casting and dry-joint corner in Fig. 3.3.39(f) provide an abrupt but continuous return of the plane of the curvilinear sweep to the building face.

On the other hand, horizontal spandrel panels with deep rustication, or a contained sculptured profile, such as that shown in Fig. 3.3.39(g), require a miter to carry that panel profile accurately around the corner. The minimal quirk-miter corner in the spandrel panels provides an uninterrupted planar return of the profiled wall-panel surface without corner articulation. A two-stage casting at the cornice provides a similar planar wrap around the top. These sharp corners at the top emphasize the building corner's large-scale articulation. Details closer to pedestrians use the quirk corner for more finished detail.

Special corner treatment often is used to emphasize the corner to define the intersection of the wall planes with detail as shown in Fig. 3.3.39(h) and (i). The degree of detail complexity and richness, which relates to budget, determines the casting technique. The depth and shadowing of the façade on the parking structure, Fig.

Metropolitan Life Building, Atlanta, Georgia

Bell South Campanille, Atlanta, Georgia

Glenridge Highlands One, Atlanta, Georgia

Carrillon Building, Charlotte, North Carolina

3.3.39(h) is continued in the detailing of the pier corners by using deep quirk miters to accent the corners with the shadow created by the larger quirk. Separate corner pieces Fig. 3.3.39(i) are used to interrupt the wall plane at the corner, emphasizing the corners by vertically articulating the larger multistory lobby space at the base from the typical floors above. The expense of using a special corner mold to construct the elegant corner panels on the granite veneer-faced precast concrete panel building was justified based on a value engineering study. It allowed a more intricate corner detail and the flat areas of granite were able to be panelized.

Figure 3.3.39(j) represents a stronger corner treatment. Solid precast concrete corner elements are used to define the corners and the transitions from curtain wall to precast concrete panels at the corners. At the macro scale, these solid pieces have their corners articulated with quirks to add visual interest and to facilitate corner quality control. Originally planned as returns and channel spandrel covers, they were cast solid at the precaster's suggestion for economy and detailing simplification.

An alternate to mitering is the use of a separate small and simple corner panel to add interest to the façade. Special corner pieces can be cast by using modified standard unit molds, which are part of the master mold concept discussed in Section 2.3.3. If the size of the project or the available time constraints warrants multiple molds, a separate corner mold is recommended. On a high-rise building, the cost of a corner mold and the handling of an extra piece may offset the modification costs of the master mold and/or be justified by the additional flexibility in erection tolerances. Separate corners also may be advantageous in providing similar orientation of corner surfaces for matching finishes or the corner pieces may economically be designed and produced as part of one of the adjacent typical panels. Matching finishes can be very difficult when one is on a down-face and the other is on a return (vertical) face.

The variations in the overall length of a building elevation, assuming that these stay within stated tolerances, may either be accommodated in the joints or in the design of the corner pieces (see Section 4.6). Due to the reduced size of the corner panels, they will normally undergo less thermal movement and can therefore tolerate greater joint width variation.

Fig. 3.3.40 Column covers with returns.

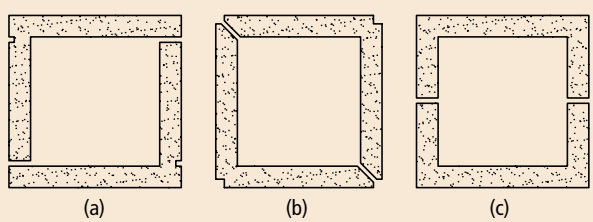

Figure 3.3.40 displays some of the various shapes of column covers that can be made with butt or mitered joints, including (a) two L-shaped units, (b) two L-shaped units with miters, and (c) two U-shaped units. There are, of course, many other combinations that can be used to accommodate isolated columns, corner columns, and columns in walls.

Sequential and monolithic corner (return) molds are more costly than mitered molds (Fig. 3.3.41). A separate corner panel often requires an additional mold.

The treatment of building corners, as well as smaller-scale, building-component corners, is critical to the final perception of the architecture. The corners are focal points where wall planes and materials change or continue. The corners outline and define the form of the building and the corners are where the light falling on the surfaces of the façades transition dramatically.

Fig. 3.3.41 Corner – return molds.

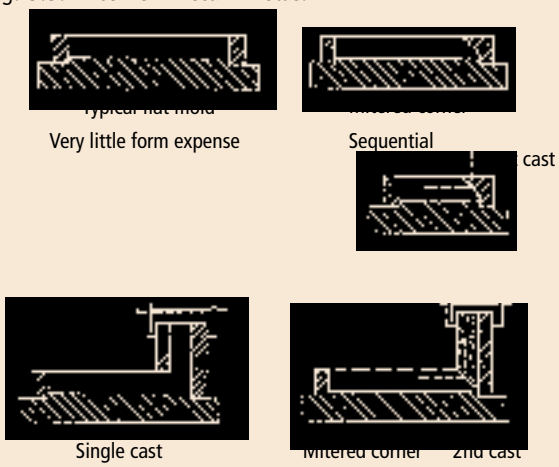

3.3.8 Returns in Relation to Finishes

The precast concrete unit's finish should be considered before its shape is finalized. Many finishes cannot be achieved with equal visual quality on all faces of the unit.

The reasons encompass factors such as mixture proportions, variable depths (and pressures) of concrete, and small differences in consolidation techniques, particularly in the case of intricate shapes with complex flow of concrete. The affect of gravity during consolidation forces the large aggregates to the bottom and the smaller aggregates, sand, and cement content upward. Consequently, the down-face in the mold nearly always will be more uniform and denser than the returns or upper radius of curved panels. This usually should be dealt with during the sample-approval process.

Consolidation of the concrete results in a more or less uniform orientation of the aggregate, with the flat, long portion horizontal to the bottom of the mold. On returns and the upper radius of curved panels, the sharp angular points of the aggregate will show upon exposure. This can give returns greater than 12 in. (300 mm) a finished texture distinctly different from that of the down-face (Fig. 3.3.42).

Fig. 3.3.42 Exposure variances caused by aggregate.

With deep returns, a more uniform finish is obtained with an exposed-aggregate finish. When an exposed-aggregate finish is specified, concrete mixtures with aggregates that are reasonably spherical or cubical should be chosen to minimize differences between down-faces and returns. For panels with large returns, or other situations where variations in appearance must be minimized, the two-stage or sequential production technique should be used if feasible (see Section 3.3.9). Otherwise, concrete mixtures should contain a continuous-graded coarse aggregate and an ASTM C 33 sand. Exposure of aggregates should be medium to deep with minimal color differences between mixture ingredients.

If the units are cast so that surfaces with identical orientation on the building are cast in similar positions, small differences in finishes between areas cast face-down and as a return should be acceptable. When this mold and casting approach is taken, the choice of finish in relation to the configuration of the unit becomes one of determining the acceptable differences in textures between down-face and varying return surfaces. This is best judged by observing sample panels from distances and positions simulating the viewing positions for the finished building.

Sculptured panels, channel panels, and panels with deep returns may have visible air voids on the returns. These air voids, or "bug/blow holes," become accentuated when the surface is smooth, acid-etched, or lightly sandblasted. If the air holes are of a reasonable size, $^1/_8$ to $^1/_4$ in. (3.2 to 6.3 mm), it is recommended that they be accepted as part of the texture. Filling and sack-rubbing could be used to eliminate the voids. However, this procedure is expensive and may cause color differences. Samples or the mockup panel should be used to establish acceptable air void frequency, size, and distribution.

The architect should accept a small difference between molded and non-molded surfaces, but the orientation of these surfaces should be determined on the drawings or specifications and be consistent throughout the project. The architect should also limit the choice of aggregates and finishes to those that lend themselves to a reasonable matching of the molded surfaces with a hand-finished open surface. Therefore, a smooth finish or one with a light exposure is not appropriate. The open surface may have to be seeded with the larger aggregates as part of the finishing process. When the shape of the units precludes any logical demarcation of formed and uniformed surfaces, closed molds cast in a vertical position may be the only answer. This will normally require complicated and expensive molds and/or deep castings.

3.3.9 Two-Stage or Sequential Precasting

Any portion of a panel cast in a vertical position will not show the same concentration or positioning of aggregate as the flat surface. Panels with large or steep returns (such as channel column covers and some spandrels) may be cast in separate pieces in order to achieve matching high-quality finishes on all exposed faces and then joined with dry joints (Fig. 3.3.43[a] and [b] and 3.3.44[a] and [b]). This method of casting enables all faces to be cast face-down with the same aggregate orientation and concrete density using

Fig. 3.3.43(a) Separate casting stages of large returns.

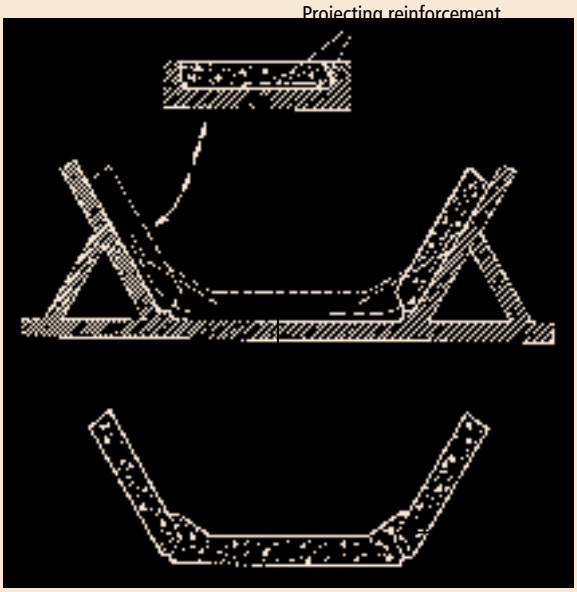

Fig. 3.3.43(b)

conventional precast concrete forming methods; back-forming is not required. Also, a combination of face mixture and backup mixture can be used, rather than a 100% face mixture.

If this is the indicated production method, attention should be paid to suitable corner details and reinforcement at the dry joints. Reinforcement is left sticking

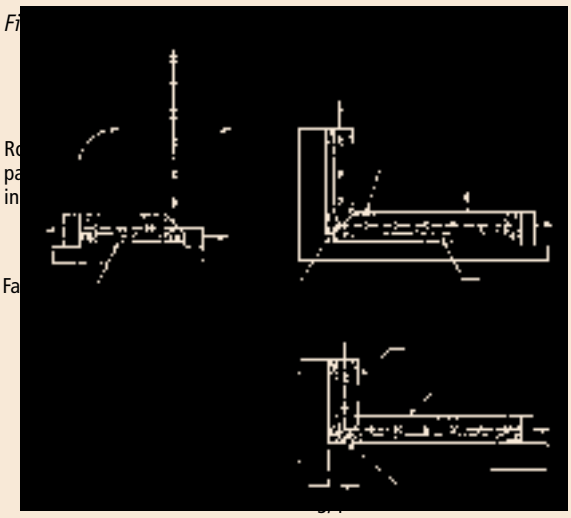

Fig. 3.3.44(b)

Fig. 3.3.45
Inter-Industry Conference on Auto Collision Repair (I-CAR) World Headquarters
Hoffman Estates, Illinois; Architect: Loebl Schlossman & Hackl; Photo: David Clifton/Loebl Schlossman & Hackl.

out of the return piece to ensure that the two pieces are adequately tied together. Although the dry joint may not show with certain mixtures and textures, precasters recommend a groove or quirk to help mask the joint. Sometimes precautions may be necessary to ensure watertightness of the dry joints. The main disadvantage of two-stage precasting is that two or three separate concrete placements are necessary to complete a panel. Figure 3.3.45 shows panels that were sequentially cast because of large returns.

3.3.10 Overall Panel Size

Panel geometry, referred to in a general sense as shape details, that does not affect the architectural concept, can be a major influence on both fabrication economy and engineering requirements. The significant shape details are overall size and configuration. The visual characteristics of a panel are determined by the architect. The size of the individual elements and the exact details of the panel geometry should be determined in consultation with the structural engineer and the precaster. Thus, both the architect and the structural engineer should be familiar with good production practice as well as production and erection capabilities of the probable fabricators. For overall economy, early coordination of design and erection are essential.

Because many of the manufacturing, handling, and erection costs are independent of the size of a piece,

making panels larger can substantially reduce the total cost of the project. The larger the panel, the smaller the number of pieces required for enclosure, which means less handling and lower erection costs.

Hoisting a precast concrete unit constitutes a significant portion of the cost of precast concrete. The cost difference in handling a large unit, rather than a small one, is insignificant compared to the increased square footage of the large unit. In addition to providing savings on erection costs, large panels provide secondary benefits of reduced amounts of caulking (fewer joints), better dimensional controls, and fewer connections. Thus, large units are preferable unless they lack adequate repetition, require high forming costs, or incur cost premiums for transportation and erection. In high seismic areas, very large panels may not be desirable because larger dimensional deformations in the supporting structure must be accommodated. In these areas, normal practice is to use panels that are one story in height and seldom span more than one structural bay. Where desired, the scale of large panels may be reduced using false joints (rustications).

The wide variety of sizes, shapes, materials, and functions that can be incorporated into a precast concrete unit makes it difficult to present a size chart. Section 4.2.9 discusses the overall limiting factors in the physical size of the unit based upon structural requirements. Other limiting factors may be handling operations during stripping, storage, shipping, and erecting. To determine the optimum size of panels and overall economy, a close collaboration between the designer and precaster is required. Panel sizes, if not integral to the design, can lead to unexpected joint lines, which detract from aesthetic intentions. The architectural trend has been to increase both the size and weight of architectural precast concrete panels.

The most economical piece size for a project is usually a large unit, considering:

1. Production repetition and size of available casting beds.
2. Handling ease and stability and stresses on the element during handling.
3. Transportation size and weight regulations and equipment restrictions.
4. Available crane access and capacity at both the plant and the project site.
5. Storage space, truck turning radius, and other site restrictions.
6. Loads imposed on the support system.

Limitations of dimensions due to handling and storing vary considerably from plant to plant, but are normally not important considerations for the architect. Tilt tables (Fig. 3.3.46), strong-backs, stiffening trusses or pipe frames for handling (Fig. 3.3.47), and plain ingenuity will often allow the larger pieces to be handled. The precaster may also make use of pretensioning or post-tensioning to facilitate handling of large units without risk of cracking or damage.

The architect should bear in mind, however, that some finishes, such as bushhammering, honing, and polishing, normally require the panels to be turned after casting for finishing. Also, the exposed surface finish may dictate the position of the panel for worker access during removal of surface retarder or sandblasting. In some cases, it may be necessary to cast in extra lifting devices to facilitate these maneuvers, and may add to the cost for larger panels.

Fig. 3.3.46

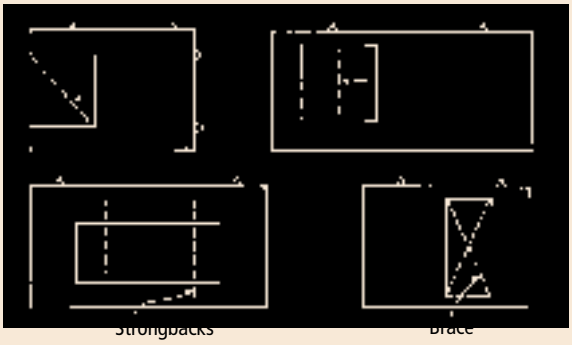

Fig. 3.3.47 Temporary strengthening of panels with significant openings.

Before deeply sculptured elements are designed into large units, potential storage problems (special racks)

should be considered, particularly where the period of storage may be long or uncertain.

Transportation limitations imposed by product dimensions and weight must be considered during the design process. It is the precast concrete manufacturer's option as to which production and transportation methods will be employed and their responsibility to verify the behavior of the precast concrete units during these operations. However, the designer should be familiar with legal highway load limitations and permit costs that are associated with transporting over-height, over-width, or over-length members.

Federal, state (provincal), and local regulations may limit the size, weight, and timing of shipping loads. Limitations vary from one locale to another whether the shipment is by truck, barge, or rail. Where climatic conditions result in load restrictions on some secondary roads during spring thaws, actual timing of the expected delivery should be considered. When large units are to be moved, a thorough check of local statutes is mandatory. This is usually done by the shipper, who should take shipping restrictions into consideration when planning the route of travel and delivery time to the site to ensure that sufficient product is delivered in the prescheduled sequence. This allows for an orderly, efficient installation in the structure.

The common payload in many areas is 20 ton (18 t) with a product size restriction of 8 ft (2.4 m) in width, 8 ft (2.4 m) in height, and 45 ft (13.7 m) in length (Fig. 3.3.48). If a unit will fit within these confines, it can usually be hauled on a standard flatbed trailer without requiring permits. By use of lowboy (step or drop deck) trailers, the product height can generally be increased to about 10 to 12 ft (3.0 to 3.7 m) without requiring special permits (Fig. 3.3.49). However, lowboys (step decks) are not as readily available, and their shorter bed length may restrict the length of precast concrete units. A triangular frame mounted on an extendable lowboy trailer can carry architectural precast concrete panels as large as 15 × 15 ft (4.5 × 4.5 m) weighing up to 20,000 lb (9 t) (Fig. 3.3.50). Finger racks allow architectural precast concrete spandrel beams to be transported in the vertical position. Note the adjustable screw clamps that secure the beams to the racks (Fig. 3.3.51).

Fig. 3.3.48 Common overall trucking volume.

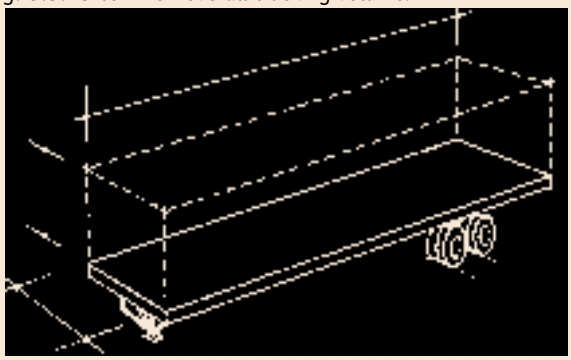

In most areas, total heights (roadbed to top of product) of 13 ft 6 in. (4.2 m) are allowed without special permit, while in others this limit is 12 ft (3.7 m). On occasion, even such heights require special routing to avoid low overpasses and overhead restrictions. Restrictions generally exist for loads over 8 ft (2.4 m) in width; maximum permit widths can vary from 10 to 14 ft (3.0 to 4.3 m) depending on the area or city. Some areas allow overall lengths over 70 ft (21 m) with only a simple permit, front and rear escorts, and travel limited to certain times of the day. Beside variations in lengths, heights, and widths, weight restrictions vary widely. Thus, the general load limit without permit (20 to 22 ton) (18 to 20 t) can, in some areas, be increased to 100 ton with special permit, while in others there are very severe restrictions on loads over 25 ton (23 t). Permits are issued in most areas only for non-divisible loads. These restrictions will add to the cost of the precast concrete unit, and should be evaluated against savings realized by combining smaller units into one large unit.

In determining final dimensions, consideration should be given to utilizing a full truckload. A precast concrete unit or several units should approximate this usual payload. For example, an 11-ton (10 t) unit is not economical, because only one unit can be shipped per load, whereas a 10-ton (9 t) unit would be economical, because two units per load can be shipped. For quick calculations, normalweight concrete, including reinforcement and hardware, weighs 150 lb/ft^3 (2400 kg/m^3).

In order to facilitate erection, it is desirable to transport members in the same orientation they will be on the structure. In many cases this is possible. For example, with single-story wall panels, transportation can be accomplished on an A-frame type trailer with the panels in an upright position from which they can be lifted directly into position. With this type of trailer, good lateral support, as well as two points of vertical support, are provided to the members (Fig. 3.3.52[a]). Longer units, which are thin compared to their length

Fig. 3.3.49

Fig. 3.3.50

Fig. 3.3.51

Fig. 3.3.52(a)

Fig. 3.3.52(b)

and width, can be transported in a favorable orientation to reduce tensile stresses. Two- or three-story panels can be transported on their long sides, taking advantage of increased stiffness while supporting the panel on two or more points, with lateral support along the length of the panel (Fig. 3.3.52[b]).

The cost of transportation is not proportional to the distance covered as the cost of loading and unloading (plus protection of the load) becomes less significant on longer hauls. The rate per ton mile is normally reduced for longer hauls. Consequently, long hauls have occurred on competitively bid jobs.

Piggyback transport by rail has been used successfully, but otherwise rail transportation is not common because of the delicate coordination required and the potential damage to units.

Water transportation via barge is inexpensive and safe, but even for plants with navigable water frontage, double handling will occur when the barges reach their destination because the panels will normally have to be transferred to the site by trucks.

3.4 COLORS AND TEXTURES

3.4.1 Colors

Architectural precast concrete can be cast in almost any color, form, or texture to meet aesthetic and functional requirements of the designer in an economical manner. Complementary combinations of color and texture can aesthetically improve any project.

Design flexibility is possible in both color and texture of precast concrete by varying aggregate and matrix color, size of aggregates, finishing processes, and depth of aggregate exposure. Combining color with texture accentuates the natural beauty of aggregates (Fig. 3.4.1). Aggregate colors range from white to pastel to red, black, and green. Natural gravels provide a wide range of rich warm earth colors, as well as shades of gray.

Specifying color and texture in precast concrete is not a difficult, laborious, or seemingly impossible task. Fortunately, there is a resource available to the specifier that can make this task easy when the specifier does not have a sample to match. It is the *PCI Architectural Precast Concrete – Color and Texture Selection Guide*, 2nd Edition. The guide was specifically developed as a starting point for the selection of color and texture. It contains several hundred images of colors and textures, and their associated mixture materials, that can be achieved with architectural precast concrete.

PCI's Color and Texture Selection Guide is available for viewing at www.pci.org. The online guide illustrates the world of possibilities of architectural precast concrete options in color and texture.

Fig. 3.4.1

Color and, consequently, color tone represent relative values. They are not absolute and constant, but are affected by light and shadow, intensity, time, and other surrounding or nearby light-reflecting colors. A concrete surface, for instance, with deep-exposed opaque white quartz appears slightly gray. This is due to the shadows between the particles blending with the actual color of the aggregate and producing the graying effect. These shadows in turn affect the color tone of the matrix.

Similarly, a smooth concrete surface will change in tone when striated. Also a white precast concrete window unit with deep mullions will change tone when bronze-colored glass is installed. Color tone is constantly changing as the sun traverses the sky. A clear sky or one that is overcast will make a difference, as will landscaping and time. And last, but by no means least, in large city and industrial environments, air pollution can cause color tone to change.

Color selection should be made under lighting conditions similar to those where the precast concrete will be used, such as the strong light and shadows of natural daylight. Muted colors usually look best in subdued northern light. In climates with strong sunlight, much stronger and brighter colors are used with success.

Surface texture also affects color. A matte finish will result in a different panel color than does a smooth finish. Texture helps to determine the visual importance of a wall and, hence, the color. For example, moderately rough finishes usually are less obtrusive than shiny surfaces. The building's appearance is a function of the designer's use of light, shadow, texture, and color.

Matrix color (cement plus pigment) exerts the primary color influence on a smooth finish because it coats the exposed concrete surface. As the concrete surface is progressively removed and the aggregates are exposed, the panel color increasingly reflects the fine and coarse aggregate colors. Nevertheless, the matrix color always has an effect on the general tone of the panel.

Cement may be gray, white, or a mixture of the two. All cements possess inherent color and shading differences depending on their brand, type, mill, and quarry source. For example, some gray cements are nearly white while others have bluish, reddish, or greenish tones. Some white cements have a buff or cream undertone, while others have a blue or green undertone. In addition, a finely ground gray or white cement is

normally lighter in color than a coarse ground cement of the same chemical composition. If color uniformity is essential, cements of the same type and brand from the same source should be specified. Gray cement is generally subject to greater color variation than white cement even when supplied from one source. Normal production variables, such as changes in water content, curing cycles, temperatures, humidity, and exposure to climatic conditions at varying strength levels, all tend to cause greater color variations in a gray cement concrete in relation to concrete made with white cement. A low water-cement ratio cement paste is almost always darker than a high water-cement ratio paste made with the same cement.

Although white cement will give the least amount of color variation, it is important to choose the lightest color aggregates to decrease the shadowing effect of aggregates close to the surface. Gray cement has a greater ability to provide an opaque covering of aggregate, but has color differences that may offset this advantage.

Different combinations of gray cement, white cement, pigments, and aggregates offer an extensive range of possible color combinations. If gray is the desired color of the matrix and the optimum uniformity is essential, a mixture of white and gray or white cement with gray pigment is recommended. Uniformity normally increases with increasing percentages of white cement, but the gray color remains dominant. See Section 2.2.5 for economy of materials.

Pigments often are added to obtain the desired matrix color. All pigments used should pass ASTM C 979, *Pigments for Integrally Colored Concrete*. Most pigments used to color concrete are iron oxide pigments—both natural and synthetic—and hence tend to be earth tones. Natural iron oxides are widely available in earth tone red, yellow ochres, and raw and burnt umbers. Synthetic iron oxides are manufactured in shades of red, yellow, and black. Other pigments are available to achieve green and blue shades.

Different amounts of pigment, expressed as a percentage of the cement content by weight, produce various shades of color. All pigments, however, have a saturation point, beyond which additional pigment will not continue to significantly increase the color intensity. For synthetic iron oxides this saturation point is around 5% and for natural iron oxides it is around 10%. Pigment additions should never exceed 10% of the weight of the cement in the mixture. High percentages of pigment reduce concrete strength because of the high percentage of fines introduced into the mixture by the pigments (which increases the water requirement of the mixture). For this reason, the amount of pigment should be controlled within the limits of strength and absorption requirements.

Pigments may be combined to achieve the desired shade, as long as the total amount stays below the recommended maximum level. White portland cement must be used to create light pastel shades such as buff, cream, ivory, pale pink, and rose tones, as well as bright intense yellows, oranges, and reds. Red, tan, black, dark gray, and other hues are produced very satisfactorily using gray cement.

Shades of buff, tan, red, orange, yellow, brown, charcoal, and gray are the least costly. Green is permanent but expensive, except in light shades. Blue is very expensive and some blues are not uniform or permanent. Cobalt blue should be used to avoid permanence problems. Dark black colors cannot be achieved in concrete. The use of carbon black can initially create intense black concrete. However, due to its extremely fine particle size, it has a tendency to leach out of the concrete matrix. As the pigment is removed, the concrete substrate appears increasingly "faded." Synthetic black iron oxide, on the other hand, will produce a stable charcoal color.

Titanium dioxide pigment, in addition rates of 1 to 3% of the weight of the cement, is sometimes used to lighten gray concrete or to further intensify the whiteness of white concrete. However, titanium dioxide does not have the tinting power to produce white concrete when using gray cement. If white concrete is desired, white cement must be used.

Many of these pigment options are represented in Fig. 3.4.2. Each column shows variations in cement color: gray, $^1/_2$ gray and $^1/_2$ white, and all-white portland cement. Each grouping of three samples represents a different pigment shown at three different concentrations. The amount of pigment added is expressed as a percentage by weight of the cement in the mixture. These swatches are meant to represent a range of possibilities for matrix colors available in architectural precast concrete.

Fig. 3.4.2 Color selections.

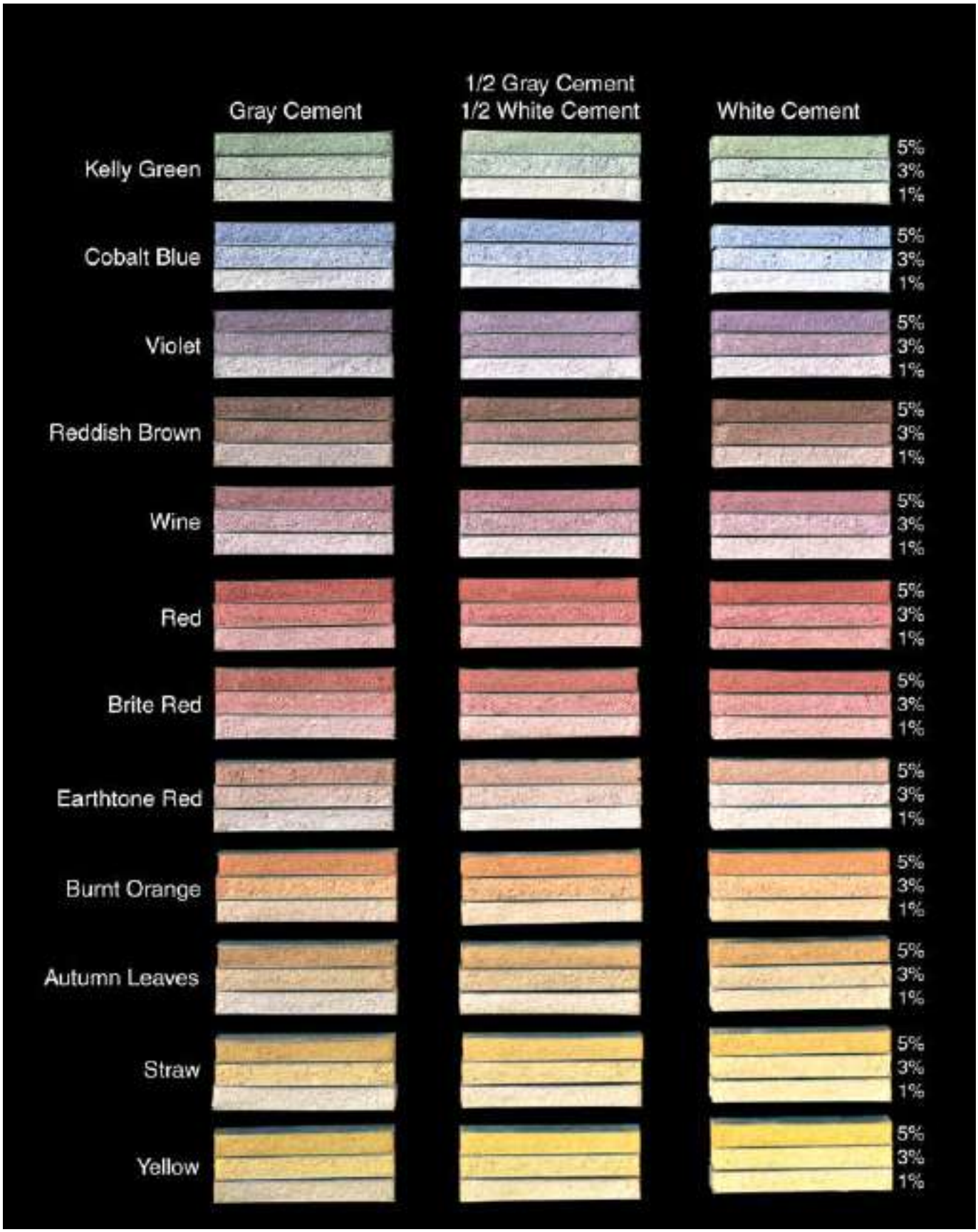
Gray Cement
1/2 Gray Cement
1/2 White Cement
White Cement
Kelly Green
Cobalt Blue
Violet
Reddish Brown
Wine
Red
Brite Red
Earthtone Red
Burnt Orange
Autumn Leaves
Straw
Yellow
5%
3%
1%

Significant points to consider when color consistency is critical are:

1. Quality and quantity of the pigment.
2. Proper batching and mixing techniques and the coloring agent's affect on concrete workability.
3. Quality (freedom from impurities) of the fine and coarse aggregates.
4. Uniform quantities and gradation of fine materials (passing No. 50 sieve and including the cement) in the concrete mixture.
5. Careful attention to curing and uniform duplication of curing cycles.
6. Type and color of cement.
7. Constant water-cement ratio in the mixture.
8. Consideration of those factors that can contribute to efflorescence. This is especially important for dark and intense colors, which aggravate any efflorescence problem by making it more visible. Efflorescence deposited on the surface may mask the true color and give the appearance of pigment fading even though the pigment or cement paste has undergone no change. The original color may be restored by washing with a dilute solution of hydrochloric acid and water and rinsing thoroughly. In addition, weathering of the pigmented cement paste exposes more of the aggregate to view. If the color of the aggregate contrasts that of the pigment, a change in the overall color of the surface may be noted.

Fine aggregates (sand) have a major effect on the color of white and light-colored concrete, and can add color tones. Where the color depends primarily on the fine aggregates, gradation control is required, particularly where the color tone depends on the finer particles. Where fine aggregates (sand) are manufactured by crushing colored coarse aggregates and bagged by sizes directly from the screening operations, uniformity in gradation can be maintained from one batch to the next. For fine aggregates in bulk, that are subject to several rehandling processes, this is not feasible. Consequently, it is recommended that for bulk material, the percentage of the fine aggregates passing the No. 100 (150 μm) sieve should be limited to no more than 5%. This may require washing of such aggregates, but the premium for this is justified by the increased uniformity of color.

The precast concrete manufacturer should verify that adequate supply from one source (pit or quarry) for each type of aggregate for the entire job will be readily available. If possible, the precaster should obtain the entire aggregate supply prior to starting the project, or have the aggregate supply held by the aggregate supplier. Stockpiling will minimize color variation caused by variability of material and will maximize color uniformity.

For reasons of workability, a percentage of natural sand is preferable in a concrete mixture. Manufactured sand, however, often adds valuable color tones, and may be used as part of the fine aggregates. Manufactured sand is generally more expensive than natural sand and may not always be available. Crushed pink granite, for instance, will create a warm-colored matrix, but due to the size of sand particles, the pink can hardly be distinguished in the finished unit. With a light to medium exposure, a uniform color appearance may be obtained by using crushed sand of the same material as the coarse aggregate. When maximum whiteness is desired, a natural or manufactured, opaque white or light yellow sand should be used. Most naturally occurring sands lack the required whiteness, and the precaster usually must look to the various manufactured fine aggregates to achieve the white color desired. Generally, these aggregates consist of crushed limestone (dolomite, calcite) or quartz and quartzite sands.

The colors in coarse aggregate are multiple, and most precasters will have a supply of aggregate samples at the plant. Selection of aggregates for colors should be governed by the following considerations:

1. Aggregates must measure up to proper durability (soundness and absorption) requirements, be free of impurities (iron oxides), and be available in shapes required for good concrete and appearance (chunks rather than slivers).
2. Aggregate shape affects the appearance of a surface after weathering. Rounded aggregates (pebbles) tend to remain clean, but angular aggregates of rough texture tend to collect dirt, and confine it to the recesses of the matrix. For this reason, as well as architectural appearance, the area of exposed matrix between aggregate particles should be minimized. It may be advisable for the matrix to be darker than the aggregate in structures subject to considerable atmospheric pollution.
3. Final selection of colors should be made from

concrete samples that have the proper matrix and are finished similarly to the planned production techniques. Some finishing processes change the appearance of aggregates. Sandblasting will dull them, while acid etching may increase their brightness. Exposure by retardation normally leaves the aggregates unchanged. The method of exposing aggregate alters the color of the surface by affecting the color of the aggregate and by the amount of shadow cast by the exposed particles.

4. Aggregates with a dull appearance in a gray matrix may well appear brighter where the matrix is basically light colored.
5. Weathering may influence newly crushed aggregates. When first crushed, many aggregates are bright but may dull slightly with time. Similarly, some of the sparkle caused by acid etching or bushhammering may not survive more than a few weeks. The architect should recognize that samples maintained indoors may not retain their exact appearance after exposure to weather even after a few weeks.

Coarse aggregates are selected on the basis of color, hardness, size, shape, gradation, method of surface exposure, durability, cost, and availability. Colors of natural aggregate vary considerably according to their geological classification and even among rocks of one type (Fig. 3.4.3).

Clear quartz provides a sparkling surface to complement the color effect created by use of a pigmented matrix. White quartz ranges from translucent white to a deep milky white. Rose quartz provides surfaces ranging from a light pink to a warm rose color. Green, yellow and gray colors are also available.

Marble offers the widest selection of colors, including green, yellow, red, pink, blue, gray, black, and white. Blue and yellow marble aggregates are available in pastel hues. Marble is available in many shades running from light to moderately dark. Crushed limestones tend toward white, gray, and pink colors.

Granite in shades of pink, red, gray, dark blue, black, and white produces a soft, mottled appearance when used in concrete. Traprocks, such as basalt, provide gray, black, and green colors and are particularly durable.

Fig. 3.4.3 Kaleidoscope of aggregate colors.

Photos:Wyckoff Advertising, Inc.

Some washed and screened gravels can be used to provide brown or reddish-brown finishes. Yellow ochers, umbers, and sandy (buff) shades abound in river bed gravels. Also, an almost pure-white gravel occurs in several sedimentary formations.

Marine-dredged aggregates or seashells should be washed with fresh water to reduce their salt content. There is no maximum limit on the salt content of coarse or fine aggregate; however, the chloride limits for the concrete should be followed. Seashells are hard materials that can produce high-quality concrete. Due to the angularity of the shells, additional cement paste is required to obtain the desired workability. Aggregate containing complete shells (uncrushed) should be avoided, as its presence will result in voids in the concrete and lower the compressive strength.

Local aggregates should not be overlooked. They usually are economical and can be attractive with the proper matrix. Local architectural precasters are familiar with available aggregates and usually have concrete samples made with different materials on display (Fig. 3.4.1).

Coarse aggregates should be reasonably uniform in color. However, surfaces consisting of a single color lack clarity and, strangely enough, purity. In general, a light-colored aggregate is preferable to avoid shaded or toned areas. Light and dark coarse aggregates require care in blending to provide color uniformity within a single unit. With a small color difference between the light and dark aggregates and a small variance in total amounts of each aggregate, the chances of uniformity are enhanced. It is advisable to match the color or tone of matrix to that of the coarse aggregate so that minor segregation of the aggregate will not be noticeable. Panels containing aggregates and matrices of contrasting colors will appear less uniform than those containing materials of similar colors (as the size of the coarse aggregate decreases, less matrix is seen and the more uniform the color of the panel will appear).

The choice of aggregates becomes more critical in smooth white concrete. Due to the greater difference in color between the white cement and aggregates, the white cement has less ability than gray cement to form an opaque film over the aggregates and prevent the aggregate color from showing through. Thus, special consideration must be given to the selection of suitable aggregates to help prevent variations in color and color intensity on the finished surface. A light-colored aggregate is preferable to a dark aggregate when trying to avoid shaded or toned areas.

Two concrete mixtures with differently colored matrices exposed at the face of the same panel should be specified only with a demarcation feature such as a rustication or protruding area.

The ease of obtaining uniformity in color is directly related to the ingredients supplying the color. Optimum uniformity is obtained by using white cement. Extreme color differences between aggregates and matrix should be avoided. In all cases, color should be judged from a full-sized sample that has the proper matrix and has been finished in accordance with planned production techniques.

3.4.2 Textures

Textures allow the naturalness of the concrete ingredients to be expressed, provide some scale to the mass, express the plasticity of the concrete, and improve its weathering characteristics. A wide variety of textures is possible, ranging from a honed or polished surface to a deeply exposed one.

The surface finish enhances the character of the building by contributing a presence to complement the building aesthetics. However, a small, solitary concrete sample can mislead the architect in the value of a finish compared to its appearance when viewed in the building scale from a distance.

As a general rule, a textured surface is more aesthetically pleasing (greater apparent uniformity) than a smooth as-cast finish. The surface highlights and the shadings of aggregate color camouflage subtle differences in texture and color of the concrete. Also, any damage is more easily repaired on textured surfaces than on smooth finishes.

A texture may be defined, in comparison with a smooth surface, as an overall surface pattern. The range of textured finishes for architectural precast concrete molds includes the characteristic imprint or patterns created from a form liner or mold. Alternative textured finishes may be produced by removing the surface mortar to expose the coarse aggregate in the mixture by various methods.

A profile may be defined, in comparison with a flat surface, as a shape rather than a texture, produced from a specially made mold or form liner. One well known example is the striated or ribbed finish.

Profiled surfaces can be either smooth or textured, in a similar way flat surfaces can be either smooth or textured. This gives four possible combinations.

It is also possible for part of a panel to be given more than one finish. This design feature allows for a wide range of appearance options. A detailed description of the more common textures and finishes is given in Section 3.5.

There are four important factors to be considered in choosing a texture:

1. **The area of the surface.** This affects the scale of the texture. Coarse textures usually cannot be used effectively for small areas. Dividing large, flat areas or surfaces into smaller ones by means of rustications tends to deemphasize any variations in textures.
2. **The desired effect at a viewing distance.** The designer may seek a visually pronounced texture or may use texture as a means to achieve a particular tone value. The visual effect desired at the normal viewing distance influences the texture and size of aggregate chosen for the panel face. Figure 3.4.4 shows different size aggregates viewed at 30 ft (9 m) and 75 ft (23 m).

Table 3.4.1 Suggested Visibility Scale.

Suggested visibility scale	
Aggregate size, in. (mm)	**Distance at which texture is visible, ft (m)**
1/4–1/2 (6–13)	20–30 (6–9)
1/2–1 (13–25)	30–75 (9–23)
1–2 (25–50)	75–125 (23–38)
2–3 (50–75)	125–175 (38–53)

The viewing distances in Table 3.4.1 are based on the use of aggregate of one color. They may require modifications when the aggregate contains both light and dark particles. Further modifications may be required to include the effects of panel orientation. For example, the contrast caused by shadows from aggregate particles will vary with lighting conditions.

3. **The orientation of the building wall elevation.** This determines the amount and direction of light on the surface and how the panel will weather.

Fig. 3.4.4

4. **Aggregate particle shape and surface characteristics.** For exposed-aggregate textures, the aggregate particles may be rounded, irregular, angular, or flat. Their surfaces may be glossy, smooth, granular, crystalline, pitted, or porous. Both the shape and surface characteristics determine how the surface will weather and reflect light.

In addition to the visual effect of texture within reasonable distances, textures may be used to achieve colors based on the natural colors of the exposed aggregates and matrix.

The size of the aggregate should be related to the configuration of the panels. The larger the aggregate, the more difficult it will be to detail edges, reveals, and returns.

Exposed-aggregate finishes are popular because they are reasonable in cost and provide an infinite variety of colors and textures. This is achieved by varying the type, color, and size of aggregate, color of matrix, method of exposure, and depth of exposure.

The different degrees of exposure are:

Light Exposure — where the surface skin of cement and some sand is removed, just sufficiently to expose the edges of the closet coarse aggregate. This imparts a fine, sandy texture. Matrix color will greatly influence the overall panel color.

Medium Exposure — where further removal of cement and sand has caused the coarse aggregate to visually appear approximately equal in area to the matrix.

Deep Exposure — where cement and sand have been removed from the surface so that the coarse aggregate becomes the major surface feature.

The extent aggregates are exposed or "revealed" is largely determined by their size. Exposure should not be greater than one-third the average diameter of the coarse aggregate particles or one-half the diameter of the smallest sized coarse aggregate.

Sandblasted

Acid Etched

Retarded

Fig. 3.4.5 Different degrees of exposure.

Figure 3.4.5 shows photographs of retarded, sandblasted, and acid-etched samples with the various depths of exposure on the same concrete mixture.

3.5 FINISHES

3.5.1 General

Finishes, in terms of color and textures, are discussed in Section 3.4. This section describes the various methods of obtaining these finishes. Because surface finishes depend on properly fabricated molds, the designer should clearly understand the capabilities and limitations of mold production (see Section 2.2).

The appropriate finish should be carefully chosen and clearly specified. The designer should base the final choice of surface finish on a balance between appearance (uniformity of color and texture) and cost with consideration of the limitations in materials and production techniques. The appearance can be judged using a combination of samples and reduced-scale or full-scale mockups (see Section 3.2). These samples or mockup panels can then be made available at the precast concrete plant so that all concerned can be assured that standards of finish and exposure are being maintained. Appearance, colors, and textures of the surface finishes of all units should match within the acceptable range of the colors, textures, and general appearances of the approved sample panels.

During the manufacturing process different panels may be subjected to varying levels of ambient humidity. Initially, tonal variations in color might be considered unsatisfactory, but are likely to moderate when the panels have a balanced moisture content.

Quality assessment should also include the likelihood of maintaining a reasonable level of uniformity from start to finish of production. For instance, it is not too difficult to get a uniform distribution of two differently colored aggregates in a small sample produced under laboratory conditions, but it could be a difficult task to produce the same uniform appearance on a daily basis. Generally speaking, if two different colored aggregates are contemplated, the difference in appearance (colors) should not be too prominent, and similarly, the color difference between aggregates and matrix should also be weighed against the practicality of obtaining a uniform appearance.

A compromise may be required between the finish and the shape of a precast concrete panel. Sculptured panels may have visible air voids on the returns that become accentuated when the surface is lightly finished. Normally, smooth finishes also will have air voids on return surfaces. If air holes are of a reasonable size ($^1/_8$ to $^1/_4$ in. [3 to 6 mm]), it is recommended that they be accepted as part of the texture. Filling and sack-rubbing will eliminate the voids, but this method is expensive and may cause color differences. Exposed-aggregate finishes often have variations between faces and returns. To minimize differences, mixtures should contain reasonably spherical or cubical aggregates. For large returns, or other situations where variations in appearance must be minimized, sequential casting should be considered.

The surface of large panels should be divided into smaller areas by means of rustications or reveals to minimize the perception of textural differences.

Finishing techniques used in individual plants may vary considerably from one part of the continent to another, and between individual plants. Each plant has developed specific finishing techniques supported by skilled operators and/or special facilities. For actual projects, be sure to confer with the local precasters for assistance in obtaining the desired appearance and relative costs. The following sections discuss each of the finishing techniques.

3.5.2 Smooth As-Cast

A smooth as-cast finish shows the natural look of the concrete without trying to simulate any other building product. Fine surface details and sharp arrises can be achieved with a smooth finish. This finish is perhaps the most difficult to produce. When a high level of color uniformity is required, its use is strongly discouraged. There is also the question of how the surface will change when exposed to the weather (see Section 3.6). Smooth surfaces tend to weather unevenly and become discolored from rainwater and airborne particles.

Smooth concrete makes the maximum demands on the quality and maintenance of the mold and on the concrete itself. Color variations tend to be most pronounced when the mold face is glassy and impermeable. While a rough concrete surface will scatter reflected light and soften the impact of blemishes, a smooth surface will make variations more conspicuous. Color uniformity is difficult to achieve on gray, buff, and pigmented concrete surfaces. The use of white cement yields better color uniformity than gray cement. Allowable color variation in the gray cement is readily apparent on the uninterrupted surfaces of smooth off-the-mold concrete, and any variation is likely to be regarded as a surface blemish.

Fig. 3.5.1(a), (b) & (c)
Prince of Peace Catholic Church
Taylors, South Carolina;
Architect: Craig Gaulden Davis Inc.

The core of the church in Fig. 3.5.1(a), (b) and (c) is a loadbearing precast concrete frame that also serves as the primary interior and exterior finish. Each exposed precast concrete element is composed of two pieces, joined back to back. They are stacked and joined to elements above and below with steel pins. The smooth-as-cast gray surfaces serve as final finishes and allow the church environs to recreate a historic way of building by rendering the appearance of stone. The detailing and surface treatment of the precast concrete components satisfied aesthetic concerns and the use of the structural material as the building's primary finish lent integrity to the design concept.

Conceived as a work of art in its own right, the art center in Fig. 3.5.2(a) was designed to interact with its surroundings and dispense with the traditional walls of a museum. The main façade is restrained with horizontal windowless volumes of gray, smooth as-cast precast concrete and black-anodized aluminum panels effortlessly floating over the glass voids. The architect achieved the desired raw as-cast look with precast concrete. At the corner of the building, the cantilevered projections of the block-like elements become more defined (Fig. 3.5.2[b]). The vertically stacked masses seem like a cubist collage of a façade hovering above the glazed base. The panels appear to almost defy gravity while approximating the cacophony of the streetscape.

Smooth as-cast precast concrete panels have a smooth film of hardened cement matrix. The finished color is therefore determined primarily by the color of the cement. In some instances the sand may also have some affect. Initially, this is likely to be insignificant unless the sand contains a high percentage of fines or is highly colored. However, as the surface weathers, the sand becomes more exposed and its influence or effect on color becomes more marked.

The color of the coarse aggregate should not be significant unless the particular panel requires a high degree of consolidation. Under this circumstance, some aggregate transparency may occur, causing a blotchy, non-uniform appearance. Aggregate transparency, or "shadowing," is a condition in which a light-colored, formed concrete surface is marked by dark areas simi-

lar in size and shape of particles of coarse aggregate in the concrete mixture. When encountered, it usually appears on smooth surfaces and causes a blotchy and irregular appearance. The effect can be reduced by using lightly colored coarse aggregates with low absorption and white cement.

The smooth cement film on the concrete may be susceptible to surface crazing (fine and random hairline cracks) when exposed to wetting and drying. In most cases, this is a surface phenomenon (penetrates only as deep as the thin layer of cement paste at the surface of a panel) and does not affect structural properties or durability. In some environments, crazing will be accentuated by dirt collecting in these minute cracks. This will be more apparent in white than gray finishes and on horizontal more than vertical surfaces.

Precast concrete panels with a smooth as-cast finish will normally have air voids, particularly on return surfaces. If these air holes are of reasonable size, 1/8 to 1/4 in. (3 to 6 mm), it is recommended that they be retained as part of the surface texture rather than sack-rubbed. Filling and sack-rubbing will eliminate the voids, but many cause increased color variations. Samples or mockup panels should be used to establish the acceptability of color variation and air voids with respect to frequency, size, and distribution uniformity.

For true economy, units with smooth as-cast surfaces should be produced without additional surface treatment after stripping from the molds, except for possible washing and cleaning. This, in turn, demands the following precautions:

1. Provide architectural relief to flat, exposed surfaces. Some sculpturing of the panel is highly desirable. Careful attention to detailing is essential. Make provisions for ample draft, chamfer edges and corners to minimize stripping damage (see Sections 3.3.2 and 3.3.7), and provide suitable water drips and other weathering details (see Section 3.6). The smooth as-cast finishes are the most difficult of all

Fig. 3.5.2(a) & (b)
Lois & Richard Rosenthal Center for Contemporary Art
Cincinnati, Ohio;
Architect: Zaha Hadid Architects, Design Architect;
KZF Design Inc., Architect of Record.

precast concrete finishes to repair in terms of color and texture match.

2. The architect should specify the panel surface expectations regarding joints in the mold face, so that the acceptable level of surface appearance is established.

The designer and precaster must accept and understand the limitations of smooth as-cast finishes. Smooth, as-cast precast concrete panels usually have some surface imperfections. Minor variations in texture of mold surface reflected on the smooth concrete surface, color variations, air voids (bug/blow holes), and minor surface crazing and blotchiness are to be expected, especially on non-profiled flat panels. Both designer and precaster must be aware of the realistic surface finish that will be obtained. Of all precast concrete finishes, this finish is the most misunderstood when it comes to acceptability. An acceptable smooth finish can be very difficult and expensive to achieve if a high degree of uniformity is anticipated by the architect or owner. If the surface is to be painted or stained, this finish will provide an excellent surface, while keeping costs to a minimum.

Fig. 3.5.3
Commissioners of Public Works Administrative Offices
Charleston, South Carolina;
Architect: Lucas Stubbs Pascullis
Powell & Penney, Ltd.;
Photo: LS3P Associates Ltd.

Many of the aesthetic limitations of smooth concrete may be minimized by the shadowing and depth provided by profiled surfaces (fluted, sculptured, board finishes, etc.), by subdividing the panels into smaller surface areas by means of vertical and horizontal reveals or rustications, or by using white cement (Fig. 3.5.3). Any introduction of shapes to provide shadow effects will enhance the final finish.

3.5.3 Exposed Aggregate by Chemical Retarders and Water Washing

Chemical surface retarders provide a non-abrasive process that is very effective in bringing out the natural color and luster of coarse aggregate. The application of a chemical retarder to the mold surface prior to casting the concrete delays the surface cement paste from hardening within a time period and to a depth dependent on the type or concentration of retarder. After hardening of the concrete mass (normally overnight), the retarded outer layer of cement paste is removed by high-pressure water washing, exposing the aggregate to the desired depth. This process should take place at a predetermined time after casting (Fig. 3.5.4).

The aggregate exposure obtained is controlled by the retarder; therefore, any variations in exposure are not as correctable as with sandblasting. Furthermore, deep retarded surfaces do not allow for sharp panel profiles.

The shape of the coarse aggregate, its position after consolidation, and the depth of exposure will determine the surface appearance. Appearance will therefore vary to some degree with surface orientation and aggregate shape. This is especially critical in units with returns, where vertical sides are expected to reasonably match the bottom face (see Section 3.3.7).

Precast concrete cladding matched the existing buildings' limestone and ashlar-laid red granite masonry, and successfully produced compatibility with the campus' collegiate gothic architecture (Fig. 3.5.5[a]). The red granite appearance was produced using a blend of gray and white cements, red pigments, granite aggregate, and a retarder and washing to expose the ag-

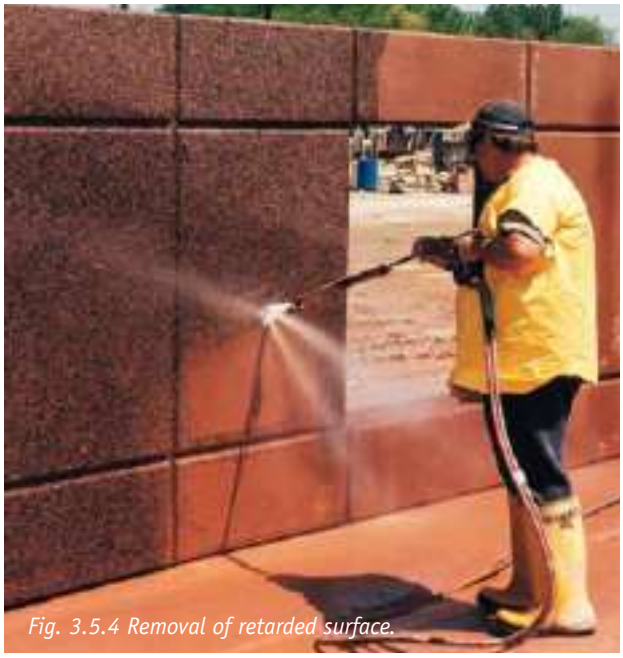

Fig. 3.5.4 Removal of retarded surface.

gregate. Quarry cut limestone was simulated using the same cements, limestone aggregate, pigment, and a light sandblast finish (Fig. 3.5.5[b]).

Depending on the particular mold configuration (vertical, radius, or complicated shapes), the placing of concrete may scour the retarder applied to sloping surfaces and affect the finish of the concrete. These factors may compound the problem of matching bottoms and returns (see Section 3.3.8).

If the bright, natural colors of the aggregate are the prime concern, exposed aggregate from retarded surfaces is the best way to achieve this result. The mixture proportions, aggregate gradation and physical characteristics of the aggregate, and matrix/aggregate color compatibility are important. It is advisable to vary the color or tone of the matrix wherever possible to match or blend in with the color of the aggregate. This match can be achieved by careful selection of cement, sand, and pigment colors. A good matrix to coarse aggregate color match will minimize mottled effects (minor variation in aggregate distribution) from being noticeable.

Chemical retarders are also available for the face-up method of casting concrete. Retarder is sprayed on the concrete surface following consolidation and finishing operations. Because the consolidation of concrete brings an excess of mortar and water to the surface, an exposure of this surface will normally fail to show as dense a coarse aggregate distribution as a down-face mold surface. This may be overcome by seeding the

Fig. 3.5.5(a) & (b)
Washington University Hilltop Campus Parking
St. Louis, Missouri;
Architect: Jacobs Technologies (formerly Sverdrup Facilities);
Skidmore, Owings & Merrill, Design Consultant;
Photos: Max Rogers.

Fig. 3.5.6(a) & (b)
One Boca Place
Baca Raton, Florida;
Architect: Smallwood, Reynolds, Stewart, Stewart & Associates;
Photos: Gabriel Benzur.

Fig. 3.5.7(a) & (b)
Adtran Corporate Headquarters, Phase IV
Huntsville, Alabama;
Architect: Cooper Carry Inc.;
Photos: (a) Gabriel Benzur; (b) Steve Brock.

surface with the coarse aggregates following the initial finishing of the surface, then tamping or rolling the aggregates into the surface, refinishing the surface, and applying the retarder. The spandrels and sunscreen panels shown in Fig. 3.5.6(a) and (b) are exposed on all sides. Uniformity of face-up exposed aggregate will not match the face-down surface and as such its use should be minimized.

The appearance of aggregate in precast concrete units subjected to retardation will not change from the natural appearance of these aggregates prior to incorporation in the concrete mixture. These methods may be used for all three degrees of exposure, but they are most commonly used for medium or deep exposure. Figures 3.5.7(a) and (b) show a retarded finish simulating red, flamed granite. Retarded and water-washed finishes are relatively easy to repair, a major advantage. Also, the mold surface is not as critical if the aggregate is to be exposed. Figure 3.5.8 shows the different appearances resulting from a medium retarded finish (top) and a medium sandblast finish (bottom) with the same concrete mixture design. The exterior of the parking structure (Fig. 3.5.9) is sheathed in precast concrete panels with medium sandblasted and exposed (retarded), rose-colored–granite aggregate finishes. The structure in Fig. 3.5.10 also has retarded and abrasive blasted finishes produced from the same mixture.

Demarcation or rustication features are recommended to prevent ragged edges where retarder is applied to a part of a mold surface.

Fig. 3.5.8

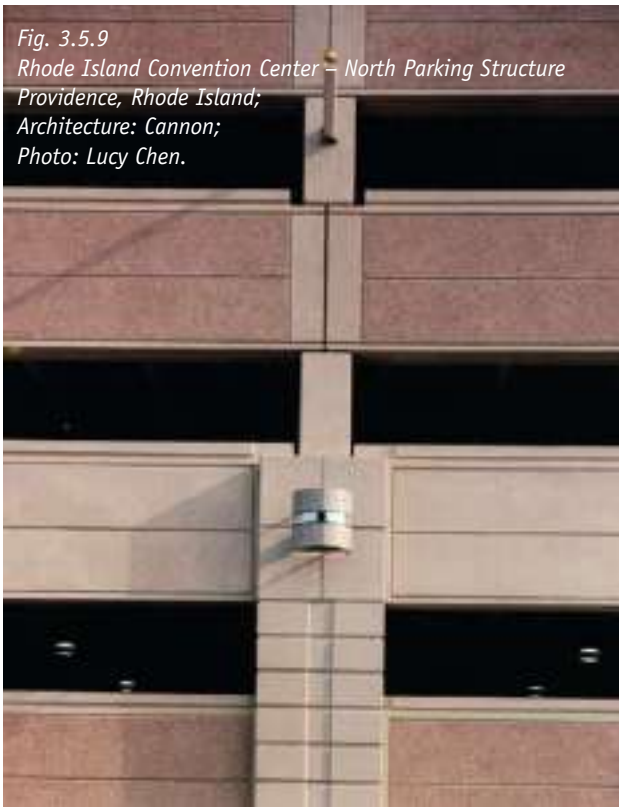

Fig. 3.5.9
Rhode Island Convention Center – North Parking Structure
Providence, Rhode Island;
Architecture: Cannon;
Photo: Lucy Chen.

Fig. 3.5.10 Retarded and abrasive blasted finishes produced from the same concrete mix.

3.5.4 Form Liners and Lettering

An almost unlimited variety of attractive patterns, shapes, and surface textures can be achieved by casting against wood, steel, plaster, elastomeric, plastic, or polystyrene-foam form liners (Fig. 3.5.11). These form liners may be incorporated in or attached to the surface of a mold. Concrete's plasticity offers the opportunity for innovation and individual character in the surface textures, patterns, and shapes, which can be achieved by casting against the various types of form liners. A large pattern offers ever-changing details due to the play of light and shadow; a fine texture offers a muted appearance that is subtle but not drab and smooth surfaces bring out the elegance and richness of simplicity. Form liner textured surfaces also mask minor imperfections that would otherwise be obvious in a smooth as-cast surface, yielding a more uniform appearance.

Light and shade created by modeling or sculpturing with liners may be used for visual effect to enliven large concrete surfaces with low relief patterns at a reasonable cost or can economically simulate another material in concrete.

Form liners can be used to replicate stone textures matching natural rock formations; fractured fins or flutes; wood board markings; trapezoidal, wave, and rib textures; sandblasted or bushhammered looks; and stucco or masonry textures. The options with combination finishes, involving one or more basic finishing methods together with form liners, are almost infinite.

Ribbed or fluted panels demand considerable attention to detailing as panel sizes and distances between openings must be a multiple of the rib spacing. Panel joints should normally be in the bottom of a groove or valley.

An important consideration is selecting the texture and/or type of form liner best suited to the project. If there are large wall expanses, a texture like fractured fin with greater depth may give a more noticeable appearance with deeper shadowing. Shallow flutes, bushhammered, or subtle textures are often better for relatively small areas. Concrete can be produced with vertical ribs or striations in a range of sizes to suit a particular structure and the distance from which it will most often be seen. Overall, the cost of liners depends on the ease of use and the number of reuses actually

Fig. 3.5.11 Some of the available form liner patterns.

Fig. 3.5.12
Washington County Fair Park
West Bend, Wisconsin;
Architect: BHS Architects;
Photo: BHS Architects.

obtained. Regardless of the form liner used, draft must be incorporated to prevent chipping or spalling during stripping of the unit from the mold.

The following rules should be observed when using form liners:

- Limit depth of design to $^1/_2$ to 1 in. (13 to 25 mm).
- In most cases, maintain a 1:8 draft on all indentation sides to prevent chipping and spalling during stripping of the panel from the mold.
- Keep all edges and corners rounded or chamfered.
- Relief may be more than 1 in. (25 mm) if the depressed area is sufficiently wide.

Liner size and characteristics may require that an architectural feature in the form of a demarcation groove, recess, rib, or plain area be detailed to hide joints between liners, or limit usage to within less than the available width of the liner, or the liner joints should be designed at form edges.

If the concrete is to be left smooth as-cast (that is, without further treatment), its appearance will be determined by the surface characteristics of the liner material as well as by the chosen pattern or texture. Variations in the absorbency of the form surface will tend to produce corresponding variations in the color of the concrete, a dark color being associated with water loss.

Sealed sandblasted wood, textured plywood, and rough-sawn lumber are useful in creating rugged textures. (Resultant surface texture may also be obtained by use of other liners reproducing this finish.) Rough-sawn lumber is used for board-surface textured finishes where concrete color variations and rough edges are acceptable. To provide the desired rural image, the insulated sandwich panels in Fig. 3.5.12 were cast using custom form liners that created two different finishes. The textures for the building's upper portions were molded from weathered barn boards, which produced a close match to true wood. Panels on the lower portion resemble field stone, with the form liners molded from limestone. The lower panels were stained on site to give them a whitewashed look.

If preformed plastic form liners are selected, it is good practice to describe the pattern and to include a reference to the pattern and its manufacturer specification.

Fig. 3.5.13
Philip Morris U.S.A., Cabarrus County, North Carolina; Architect: MBA/Architects and Planners; Photo: Beckhard Richlan & Associates.

Fig. 3.5.14(a) & (b)
Casa Club Bosque Real, Huixquilucan, Edo. de Mexico; Architect: Sordo Madaleno y Associados, S.C.; Photos: Paul Citrón.

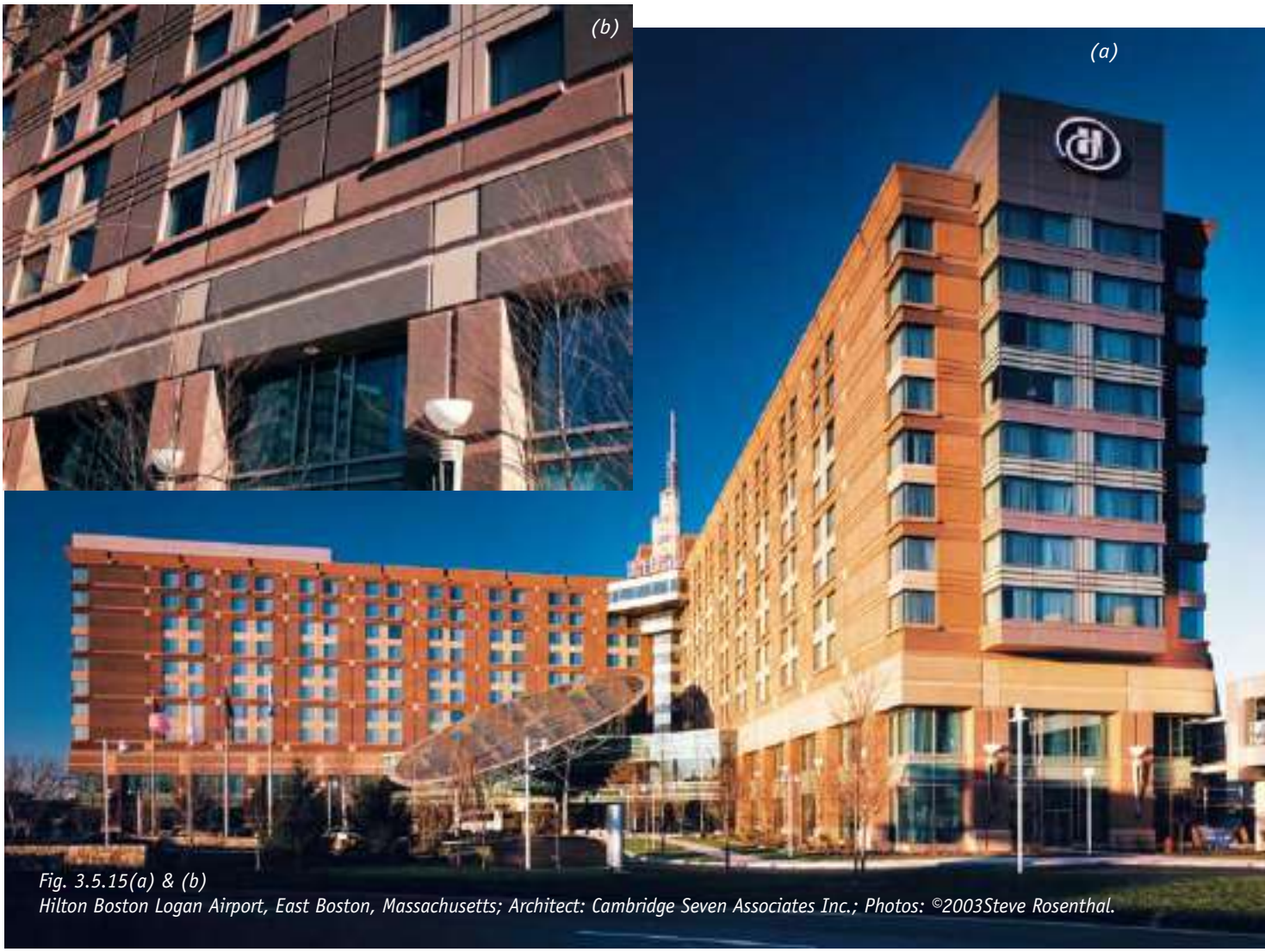

Fig. 3.5.15(a) & (b)
Hilton Boston Logan Airport, East Boston, Massachusetts; Architect: Cambridge Seven Associates Inc.; Photos: ©2003Steve Rosenthal.

The 8 × 28 ft (2.4 × 8.5 m) insulated sandwich panels in Fig. 3.5.13 simulate the hand-hammered look of fractured fins. The panels were produced by first building a smooth-ribbed mold of wood and casting one master panel from it with alternating directions of diagonal fractured ribs. That panel was then hammered and sandblasted, and an elastomeric mold was made of its hand-finished surface. This second mold was used to cast the final panels. After demolding, the rib surface was sandblasted to expose the aggregate to the desired texture.

To replicate slate stone textures, rubber form liners were reproduced from a natural slate quarry wall. Different liner sections were rotated to avoid repetitive patterns on the panels (Fig. 3.5.14[a]). Deep reveals representing the joints between modular hewn stones match the joints between panels. Interlocking lateral ends avoided vertical joints (Fig. 3.5.14[b]).

The large panels for the hotel in Fig. 3.5.15 included two window openings. The panels were cast in two integral colors as well as two finishes. A brick-red color is the building's dominant color, accented by a buff tone. A four-step process was used to create the panels' bushhammered ribbed pattern. First, a wood mold was made detailing the ribs. Then a master mold was made of concrete with an exposed-aggregate finish. Polyurethane was poured into the master mold to obtain the form liner and then the colored concrete was placed. Separated by reveals, ribbed sections were combined with smooth areas, and the whole panel finally received an acid-etched finish. The panels were alternated, with the diagonal direction of the ribs and the colors varying from panel to panel. The project required 50 different form liner mats.

Fig. 3.5.16(a), (b) & (c)
Hearst Tower
Charlotte, North Carolina;
Architect: Smallwood, Reynolds, Stewart, Stewart & Associates Inc.

The designer's goal was to blend the façade of the 659-ft-tall (200 m) office tower in Fig. 3.5.16 with its surroundings and complement existing buildings. To achieve this blend, specially designed art deco patterns were cast into panels at the fourth level to break up the apparent mass of the larger footprint of the lower the tower elevations (Fig. 3.5.16[b]). Molds for these detailed pieces, which contain a high degree of surface relief, took nearly two weeks to fabricate (Fig. 3.5.16[c]).

Fig. 3.5.16(b)

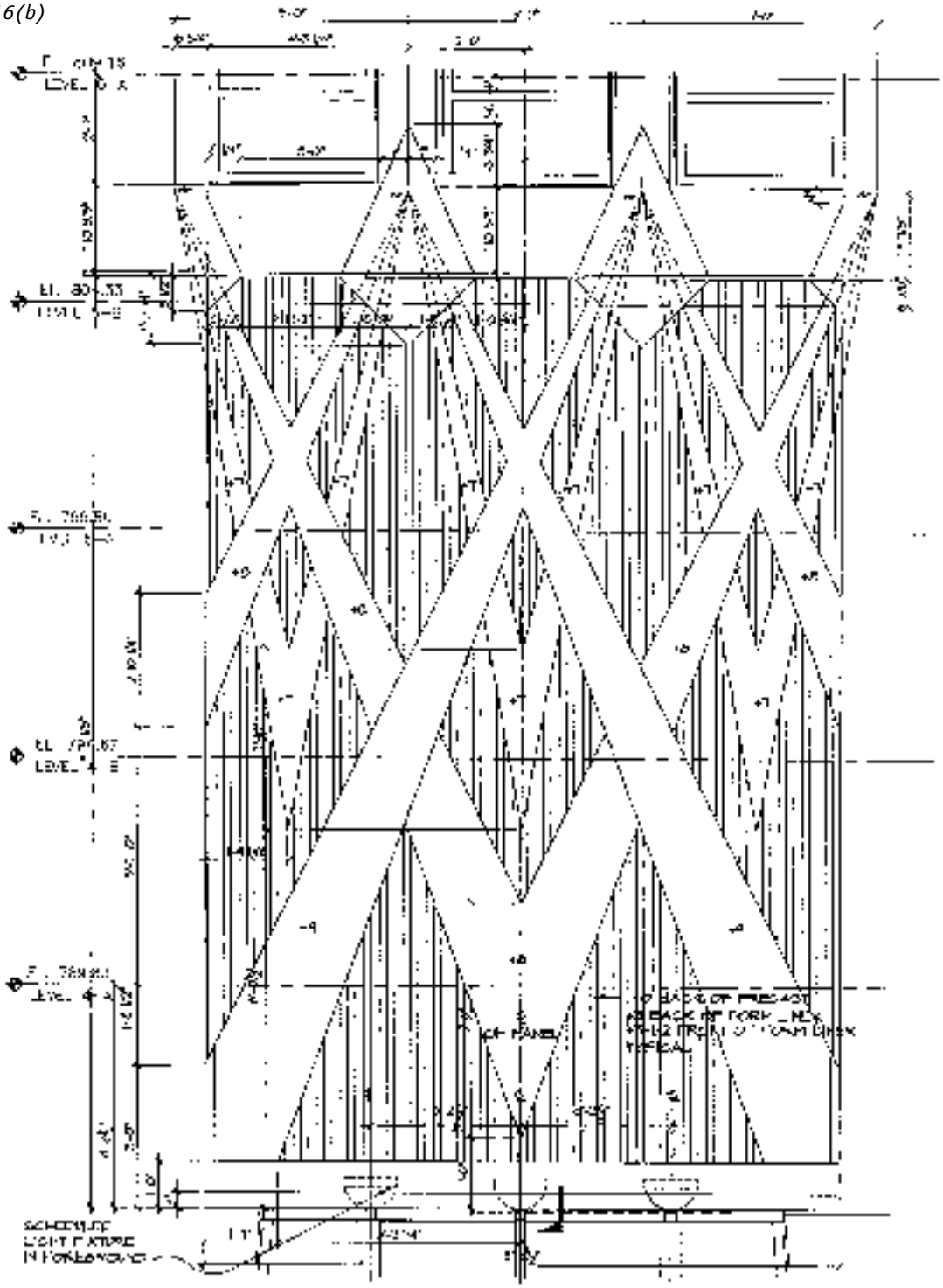

Fig. 3.5.17(a) & (b) Arizona Biltmore Parking Structure, Phoenix, Arizona; Architect: Nelsen Architects Inc.; Photos: Rod Eaves.

Fig. 3.5.19(a) & (b)
250 Park Avenue, Winter Park, Florida;
Architect: Baker Barrios Architects Inc.;
Design Consultant: Associated Consulting International; Photos: Phil Eschbach.

The parking structure in Fig. 3.5.17(a) was designed to fit seamlessly into an architecturally important luxury resort built in 1929. The original building is comprised of unique and distinctive, custom concrete masonry. Intricate form liners were created from the original hotel block. Following the precedent of the hotel, detail and patterning is concentrated on the vertical elements (Fig. 3.5.17[b]). Spandrels have scored joints matching the exact size and depth of the original masonry joints. The integrally colored concrete was given an acid-wash finish.

The architectural essence of the chevron (Fig. 3.5.18) was designed to enhance the office building's verticality while establishing textural shades and shadows.

The renovation of a very contemporary 1960s building into a traditional style that responds to the high-profile, yet quaint, character of the neighborhood resulted in the use of detailed architectural precast concrete panels to establish the architectural vernacular (Fig. 3.5.19[a]). The use of precast concrete spandrels with the owner's motif as a repetitious theme along with "old style" tavern blend thin-brick inlay in the precast concrete panels to integrate with the historical district brought new life to an old building (Fig. 3.5.19[b]). With an 85% occupancy rate during the entire construction timeline, great pains were taken to ensure those businesses who remained in the building were not inconvenienced.

Fig. 3.5.18
101 Hudson
Jersey City, New Jersey;
Architect: Brennan Beer Gorman (BBG-BBGM)/Architects;
Photo: BBG-BBGM.

Sculptural designs have been produced using sections of foamed polystyrene or polyurethane as form liners or inserts. Abstract patterns and deeply revealed designs with undercut edges can be shaped easily in these materials, however these liners are typically single-use only. Computer-controlled, hot-wire cutting devices have made custom work available at moderate prices.

Elastomeric liners are useful for finely detailed, textured, or profiled surfaces with some undercuts (negative drafts) because they greatly facilitate stripping. If other materials were used for such detail, the forms would be virtually impossible to strip. Liner size and module should be coordinated with panel joints, rustication strips, and blockout size.

Lettering

The application of lettering in concrete is no different than that of any other incised element. Appropriate draft or taper for stripping must be established for all lettering unless characters are flexible or destructible.

Thought should be given to the selection of the letter profile or cross-section. Observing the principles of shades and shadows and selecting a profile will give sharp, smooth, and regular shadows. Two profiles for recessed letters are shown and their merits analyzed in Fig. 3.5.20. Raised letters are fragile and subject to chipping at traffic levels and significantly increase forming costs.

The pattern for the letters is reversed in the mold. Note the letter "c" that is part of the word "school (need to look at the mold from the right) (Fig. 3.5.21[a]). The erected panels are shown in Fig. 3.5.21(b)

Fig. 3.5.20 Recessed lettering.

Close-up view of lettering on a precast concrete panel with

Square shoulders of the V-recessed letter makes a sharp shadow, but the broken surface of the back causes an uneven shadow making the letter appear irregular

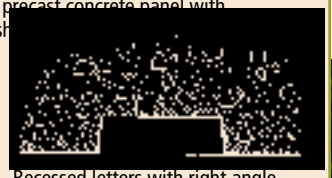

Recessed letters with right angle shoulders and flat back stand out clearly, because the shadow cast by the outer angle against the flat back is strong and regular

Fig. 3.5.21(a) & (b) Letters are reversed in the mold. Note the letter "c" that is part of the word "school".
Centralia High School, Centralia, Illinois; Architect: FGM Architects Engineers, Inc.; Photos: (a) Jim Lewis, (b) Max Rogers.

Fig. 3.5.22(a) & (b)
Music Man Square, Mason City, Iowa; Architect: Bergland + Cram; Photos: Boxwood/Bergland + Cram/Boxwood.

The visibility of letters, is to some extent, determined by the background and the style of the letters. The use of contrasting precast concrete finishes or staining the back of recessed letters in a color contrasting with the surface wall will enhance the visibility of the letters. In addition, design elements smaller than 1/300th of the viewing distance are difficult to "read" and tend to get visually lost.

The affordability and flexibility of the precast concrete panels made possible the unique detailing of the cornice and base bands of the museum honoring Meredith Wilson, composer of *The Music Man*. The cornice displays the lyrics of "Seventy-Six Trombones" (Fig. 3.5.22[a]) while the musical staff and notes at the wall base parody the melody line of the song (Fig. 3.5.22[b]).

3.5.5 Sand or Abrasive Blasting

Sand or abrasive blasting of surfaces can provide all three degrees of exposure (Fig. 3.4.5, page 152). This process is suitable for exposure of either large or small aggregates.

The degree of uniformity obtainable in a sandblasted finish is generally in direct proportion to the depth of material removal. A light sandblasting may look acceptable on a small sample, but uniformity is more difficult to achieve at full scale, particularly if the units are sculptured.

Uniformity of depth of exposure between panels and within panels is essential for achieving an acceptable finish, as in all other exposed-aggregate processes, and is a function of the skill and experience of the operator. Different shadings and, to some extent, color tone will vary with the degree of aggregate exposure.

A light blast will emphasize visible defects, particularly bugholes, and reveal defects previously hidden by the surface skin of the concrete. A light blast does minimize crazing by removing the cement skin at the surface of the concrete. The lighter the blast, the more critical the skill of the operator, particularly if the units are sculptured. Small variances in concrete strength at the time of blasting may further complicate results. Sculptured units will have air voids on vertical and sloped returns that may be accentuated by a light blast. If such air holes are of reasonable size, $^1/_8$ to $^1/_4$ in. (3 to 6 mm), it is strongly recommended that they be accepted as part of the texture, because filling and sack-rubbing is expensive and will nearly always cause color differences.

To improve uniformity, the cement and sand colors should be chosen to blend with the slightly "bruised" color of the sandblasted coarse aggregate, as the matrix color will dominate when a light sandblast finish is desired. With a light sandblasting, only some of the coarse aggregates near the surface will be exposed. With a medium or deep exposure, contrasting matrix and coarse aggregate colors should be avoided if uniformity of color is desired.

Blasting will cause some frosting of the face of the coarse aggregate, and softer aggregates will show this to a greater extent beyond a medium exposure. Frosting of the aggregate surface is more noticeable on dark-colored aggregates that have an initial glossy surface texture. This will produce a muted or frosted effect, which tends to lighten the color and subdue the luster of the aggregate. For example, white concrete tends to become whiter when blasted. Depth of sandblasting should also be adjusted to suit the aggregate and abrasive hardness. Soft aggregates tend to erode at the same rate as the mortar. There is a tendency to round off edges of soft aggregates during sandblasting and soften sharp edges and corners.

Type and grading of abrasives determine the surface texture and should remain the same throughout the entire project. Experienced precasters will select suitable sandblasting techniques and media—the specification should concentrate on the required appearance.

Although sandblasting is generally specified as an overall treatment it may be used to develop textured patterns by means of special templates. Portions of a panel can be left unblasted by making a shield of wood, rubber, or sheet metal to fit over the panel and cover those areas. Masking may be adopted for geometric patterning, or the technique can be employed by artists in producing murals in concrete.

The time when sandblasting should take place is determined by scheduling, economics, visual appearance desired, and hardness of the aggregate. However, all surfaces should be blasted at approximately the same age or compressive strength for uniformity of appearance. The concrete mixture used and the matrix strength at time of blasting will affect the final exposure, as will the gradation and hardness of the abrasive.

Fig. 3.5.23
Cape Coral City Hall
Cape Coral, Florida;
Architect: Spillis Candela/DMJM;
Photo: Larry Kline, Spillis Candela/DMJM.

The project design in Fig. 3.5.23 focused on the texture of the precast concrete as it changed from a light sandblast to horizontal ribs. In Fig. 3.5.24, special attention was taken to design the 10-story parking structure to harmonize with the office building sheathed in polished and flame-finished granite. The precast concrete was lightly sandblasted to closely match the flame-finished granite of the office tower base.

Fig. 3.5.24
Carillon Parking Deck
Charlotte, North Carolina;
Architect: Thompson, Ventulett, Stainback & Associates;
Photo: Brian Gassel/TVS.

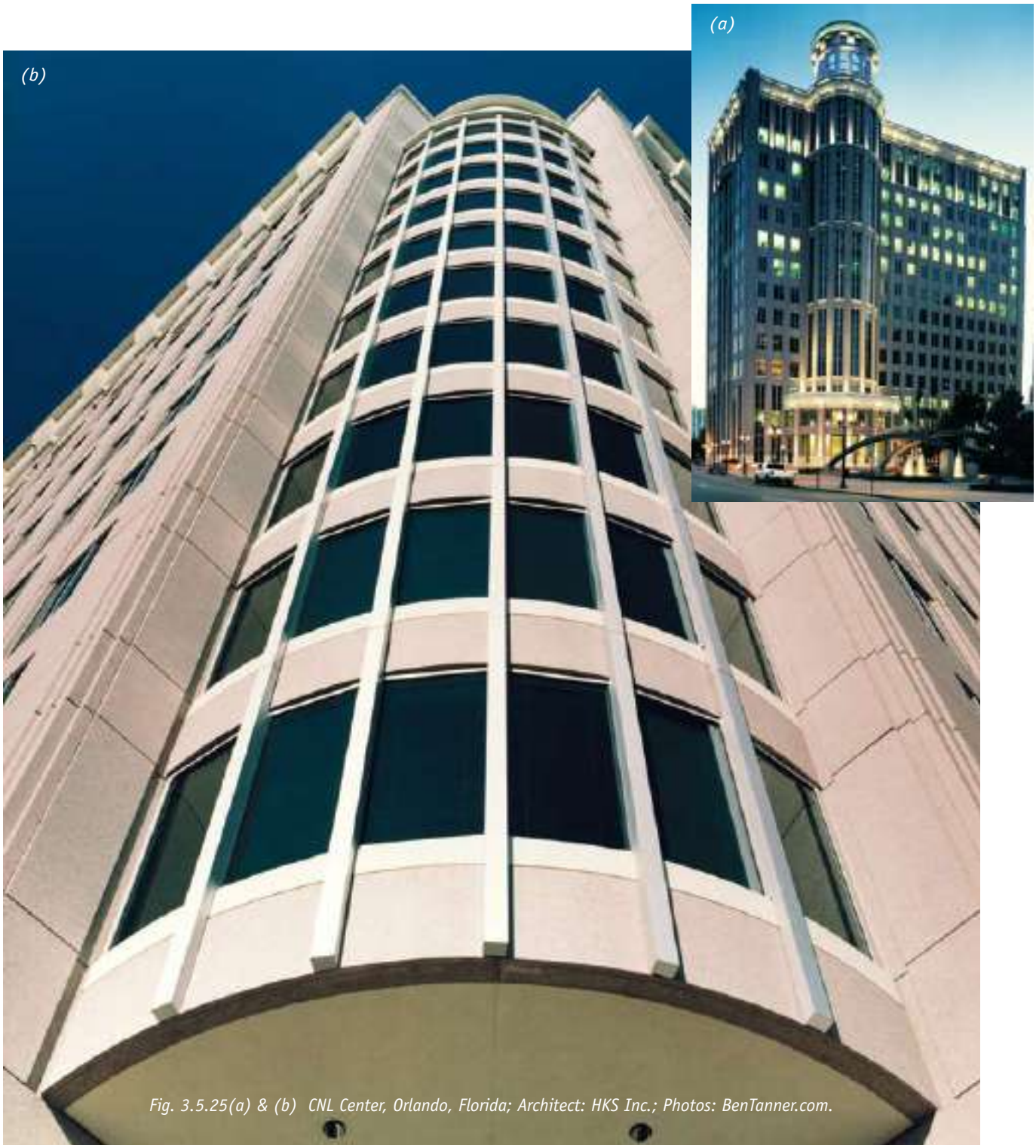

Fig. 3.5.25(a) & (b) CNL Center, Orlando, Florida; Architect: HKS Inc.; Photos: BenTanner.com.

A total of 1574 medium sandblasted precast concrete panels were used to clad the 14-story office building in Fig. 3.5.25(a). The concrete mixture comprised pea gravel, white sand, and cement along with a pigment to give a pink granite color (Fig. 3.5.25[b]).

The four-story operations center and five-level parking structure (Fig. 3.5.26) are clad with 6 in. (150 mm) thick panels that have two finishes developed from the same concrete mixture. The predominate finish is a deep retarded finish with the second finish of medium sand-

Fig. 3.5.26
AmSouth Bank Riverchase Operations Center; Hoover, Alabama; Architect: Smallwood, Reynolds, Stewart, Stewart & Associates.

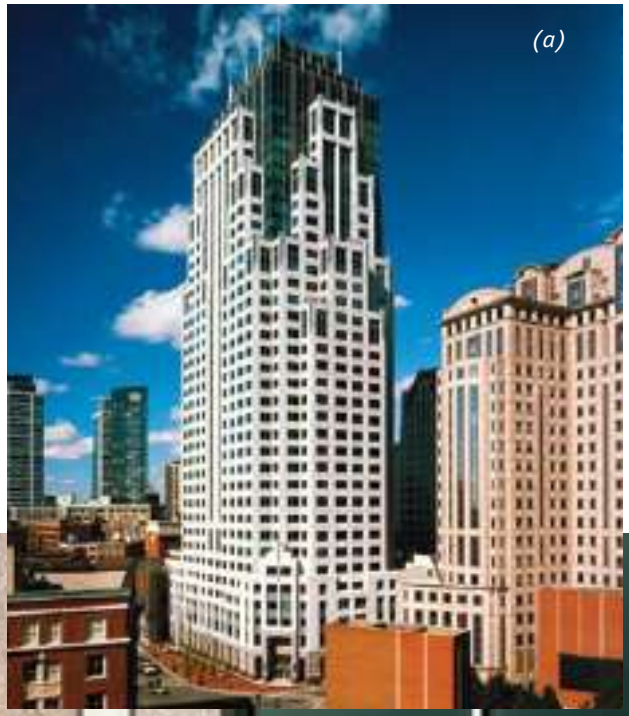

blast banding.

The panels on the 36-story skyscraper in Fig. 3.5.27(a) are characterized by a striking blend of white cement, light and heavy sandblast finishes, and four different aggregates. The result is the appearance of natural granite inlays in a field of traditional precast concrete panels (Fig. 3.5.27[b]). A design feature was the incorporation of fire/smoke ribs directly into the precast concrete column covers during the fabrication stage.

Fig. 3.5.27(a) & (b)
State Street Financial Center
Boston, Massachusetts;
Architect: TRO Jung/Brannen Associates Inc.;
Photos: Peter Vanderwarker.

A sandblasted finish is not widely used to achieve a deep, heavy texture because of the time and labor associated with deep exposure. Unless it is the intent of the architect to achieve a severely weathered look, deep exposed-aggregate finishes are more readily achieved with other methods. For example, to obtain a medium or deep exposure with a sandblasted appearance, retarders may be used initially followed by sandblasting to obtain a matte finish. This approach reduces blasting time and lessens the abrasion of softer aggregates. Using sandblasting to achieve the final texture allows for correction of any variations in exposure, so this method can result in a more uniform surface. The end result is a matte finish, as opposed to a brighter finish achieved with water blasting.

Exposed aggregates can be brightened by washing with a mild acid solution, which removes the dull cement film remaining from some exposure techniques, such as sandblasting and retardation.

3.5.6 Acid Etching

Acid etching is most commonly used for light to medium exposures. Acid etching dissolves the surface cement paste to reveal the sand with only a very small percentage of coarse aggregate being visible. An acid-etched finish is typically used to produce a fine sand texture closely resembling natural stones such as limestone or sandstone. It is often substituted for a light sandblast texturing. Where aggregates are to be exposed to a considerable depth, only acid-resistant siliceous aggregates, such as quartz and granite, should be used. Carbonate aggregates, such as limestone, dolomite, and marble, may discolor or dissolve due to their high calcium content. The aggregates on an acid-etched surface present a clean or bright look. However, after normal weathering, the aggregates lose this brightness and will closely resemble their original condition.

All surfaces should be acid-etched at approximately the same age or compressive strength for uniformity of appearance.

Acid etching of concrete surfaces will result in a fine, sandy texture with retention of detail. When the acid etching is light or used on a large, plain surface, concentrations of cement paste, under and over etching of different parts of a concrete surface and variation in sand color or content may cause some uniformity problems.

There is a minimum depth of etch that is required to obtain a uniform surface. Attempts to go any lighter than this will result in a blotchy panel finish. This depth will expose sand and only the very tip of the coarse aggregate. It is difficult to achieve a totally uniform light exposure on a highly sculptured panel. This is due to the acid spray being deflected to other areas of the

Fig. 3.5.28(a) & (b)
Walsh Library at Seton Hall University
South Orange, New Jersey (1994);
Architect: Skidmore, Owings & Merrill;
Photos: Eduard Hueber/Archphoto.com.

Fig. 3.5.29
Northwestern University McCormick Tribune Foundation Center, Evanston, Illinois; Architect: Einhorn Yaffee Prescott; and Griskelis Young Harrell, Associate Architect; Photo: Nick Merrick ©Hedrich Blessing.

panel, particularly at inside corners. This may, however, be acceptable if the sculpturing creates differential shadowing.

Figure 3.4.5 (page 152) shows a light, medium, and deep acid-etched finish with the same concrete mixture used for the retarded and sandblasted finishes.

With light textures, the color compatibility of the cement and the aggregates become more important to avoid a mottled effect. The complexion of the precast concrete used in Fig. 3.5.28(a) responds to the color and texture of the surrounding academic buildings. The color was selected to simulate the color and texture of Indiana limestone and the panels were finished with a light acid-etch. The interior column covers for the rotunda were also given a light acid-etch (Fig. 3.5.28[b]). The selection of architectural precast concrete with granite insets on the exterior allowed a great range in the expression of architectural details, and wider possibilities for functional articulation. The broadcast media center in Fig. 3.5.29 is sheathed with lightly acid-etched panels carefully modulated to pick up the scale of smaller, neighboring buildings. This was achieved by banding at every 7 ft (2.1 m) datum. In any case, a light acid-etched finish is not going to be as uniform as an exposed-aggregate finish. Also, an acid-etched finish is more difficult to patch than many of the deeper texture finishes.

Vertical rustications or reveals should extend to the bottom of the unit to avoid the potential of a deeper etch on the bottom flat band of a unit. If not extended, acid collects in the reveal and can run down and streak the bottom band.

The all–precast concrete structure features modules, measuring 4 stories high and 10 ft (3 m) wide (Fig. 3.5.30). This module allowed the façade to curve in response to the shape of the nearby Renaissance Center. A mixture of red granite aggregate, red sand, and red-pigmented cement was used to blend the panels' coloration with neighboring brick and bronze-glass buildings. The panels were given a medium acid etch to create a smooth finish and expose the richly colored texture.

Fig. 3.5.30
Jefferson Avenue Parking Structure, Detroit, Michigan; Architect: Neumann/Smith & Associates; Photo: Hedrich Blessing.

Fig. 3.5.31(a), (b) & (c)
The Minneapolis Convention Center, Minneapolis, Minnesota; Architect: Setter, Leach & Lindstrom Inc.; The Leonard Parker & Associates; and Loschky, Marquardt & Nesholm
Photos: Heinrich Photography.

The two-story convention center (Fig. 3.5.31[a]), provides over 350,000 ft^2 (32,500 m^2) of exhibit space in three domed exhibition halls and a multipurpose ballroom. The exterior precast concrete is a sandstone red color with a deep acid-etched finish along with a polished concrete band at the base of the wall. Blue-green tiles are inlaid in squares and circles on certain key panels for color and texture contrast (Fig. 3.5.31[b] and [c]). The insulated sandwich panels are horizontally inscribed with a series of reveals to suggest the heavier jointing and rustication of traditional stone buildings.

3.5.7 Multiple Mixtures and Textures within a Single Unit

Design flexibility is possible in both color and texture of precast concrete by manipulating aggregates and matrix colors, size of aggregates, form liners, finishing processes, and depth of exposure in the same unit. This textural flexibility allows designers to use combinations of different finishes using the same or different concrete mixtures, within a single precast concrete unit. Multiple-finishing techniques offer an economical, yet effective, way to heighten aesthetic interest through the use of tones and texture in façade treatments. The use of combination finishes means the designer must make an early decision to ensure that the overall concept allows for the change in finish color and texture. A suitable rustication (that is, some demarcation) needs to be detailed to separate the different colors and/or finishes. The importance of the separation depends on the specific types of finishes involved.

Samples should be used to assess the transition between adjacent finishes. Bushhammering and, to a lesser degree, sandblasting can be stopped fairly easily along specific lines and may not require the need for the demarcation features as described in Section 3.3.3.

There are two approaches for using multiple mixtures (two or more different facing mixtures in the same panel). With one approach, the first mixture is placed within an area bounded by a raised demarcation strip that equals the thickness of the face mixture. Before initial set of the concrete, the mold surface around the first cast is carefully cleaned, and the second mixture is placed and vibrated. It is important that the second mixture be placed and the concrete consolidated prior to initial set of the first concrete mixture.

Another approach features a two-stage or sequential casting procedure discussed in Section 3.3.9, which incurs added cost. In this option, one part of the panel, such as a medallion, is cast first from one mixture and, after curing, is set into the full mold and cast into the total panel using a second mixture. This method was used to cast precast concrete panels cost effectively in three finishes (Fig. 3.3.37, page 134). The retarded rosebud quartzite panel section was cast separately, set in a mold, and then the remainder of the concrete was cast around it.

Examples of projects that effectively use multiple mixtures and finishes are shown in Fig. 3.5.32.

Fig. 3.5.32 Multiple mixtures and textures.

Multiple mixes with sandblasted and acid-etched finishes.

Light and deep sandblast with granite and terra-cotta inserts.

Multiple mixes with acid-etched finish.

Multiple mixes with retarded and sandblasted finishes.

Natural stone and sandblasted finish.

Form liner and sandblasted finish.

Thin brick and acid-etched finish.

Multiple mixes with acid-etched and form liner finishes.

Thin brick, acid-etching and form liner.

Fig. 3.5.33
Westings Corporate Center I, Naperville, Illinois; Architect: Opus Architects & Engineers, Inc.

Multiple finishes provide a variety of textures at eye level, not only to add interest upon approach of the building but also to visually ground the building with its darker mass from a distance (Fig. 3.5.33). This was accomplished by using a medium gray matrix that has been lightly sandblasted to contrast with the dark charcoal aggregate that has been exposed using a retarder in horizontal bands. A third texture was achieved by using a vertically revealed form liner in the medium gray matrix panels.

Fig. 3.5.34
Monarch Place
Boston, Massachusetts;
Architect: TRO Jung Brannen Associates, Inc.;
Photo: ©1987 Steve Rosenthal.

An acid-etched finish cannot easily be applied to only a portion of a unit with alternating surfaces of retarded and acid-etched precast concrete, a reveal or raised demarcation feature is necessary to keep the retarder from spreading to the area to be etched [Fig. 3.3.6(a)] (page 114).

The same mixture proportions were used to develop two textures: one, a smooth light acid-etched pale pink texture and the other a darker, pebbled texture produced by retarding and water-washing the red granite aggregate. A series of ridges and reveals creates the patterned effect of these surfaces (Fig. 3.5.34). The corner pieces were cast as complete units to provide a smooth, clean corner without a break, which kept the rustications aligned.

To emulate historical French limestone construction of turn-of-the-century buildings, multiple joint lines

Fig. 3.5.35
55 Farmington, Hartford, Connecticut;
Architect: Thompson, Ventulett, Stainback & Associates, (TVS);
Photo: Brian Gassel/TVS.

were incorporated in the acid-etched portions (Fig. 3.5.35). The spandrels, however, have a retarded finish that–through its differing texture–accentuates the horizontal aspects of the building.

The luxury 27-story condominium features architectural precast concrete panels with local limestone aggregates with a light sandblast finish and two face mixtures (Fig. 3.5.36). The project's two colors include a soft, warm wheat color for the facing with a light, white/vanilla color for the "shoulders" and trim on the edges. Adding to this was horizontal fluting and textures created with form liners to produce 2 ft (0.6 m) bands of rougher finishes. Adding color, texture, and pattern reduced the massiveness of the building.

Several textures were cast into the precast concrete to add shadow and life to the façade, including rock face, stippled, smooth, and striated finishes (Fig. 3.5.37).

Visual interest and a unified structure can be obtained by composing harmonious patterns into themes using a palette consisting of the form and rustication lines of the surface, and the texture and color of the precast concrete. Precast concrete has extensive capabilities to create textural options. Different shapes, a variety of aggregates, and precast concrete's ability to form a variety of textures offer endless architectural variations.

Fig. 3.5.36(a) & (b)
Villa D'Este Condominiums
Houston, Texas;
Architect: Ziegler Cooper Architects;
Photos: Aker/Zvonkovic Photography.

3.5.37
Thomas F. Eagleton United States Courthouse;
St. Louis, Missouri
Architect: Hellmuth, Obata & Kassabaum, P.C.;
Photo: Timothy Hursley.

3.5.8 Tooling or Bushhammering

Concrete can be mechanically spalled or chipped with a variety of hand and power tools to produce an abraded, exposed-aggregate texture. Each type of tool produces a distinctive surface effect and a unique shade of concrete color. All tooling removes a layer of hardened concrete while fracturing larger aggregates at the surface. It produces an appearance somewhat different from other types of aggregate exposure. The color of the aggregate, but not necessarily the aggregate shape, is revealed. This finishing technique is most suitable for flat or convex surfaces, and is more labor intensive than most other finishing processes. All surfaces should be tooled at approximately the same age or compressive strength for uniformity of appearance.

Pneumatic or electric tools may be fitted with a bushhammer, a flat or dentated chisel with one to six teeth, a crandall, or multiple pointed attachments (Fig. 3.5.38[a]. The type of tool will be determined by the desired surface effect. The finish obtained can vary from light scaling to deep bold texture (Fig. 3.5.39[a], [b], and [c]). Bushhammered finishes affect the appearance, color, and brightness of the aggregate. Color tends to be lightened by the fracturing, which on dark materials has a dulling effect, but it often improves the light grayish and, in particular, white tones. By increasing or decreasing the shadow content of the texture, tooling alters the panel reflectancy and changes the tone value. Scaling produces a fine ribbed effect, rather than a deeply chipped texture. The bushhammer produces a rougher texture, fracturing aggregate, and removing up to $^{3}/_{16}$ in. (5 mm) of material. A chiseled or pointed tool fractures and accentuates the coarse aggregate and may remove as much as $^{3}/_{4}$ in. (19 mm) of concrete surface. Chisel-type tools are better for fracturing across aggregate particles, while pointed tools tend to dig into the matrix. Bushhammering or tooling should follow a specific direction to obtain a consistent texture.

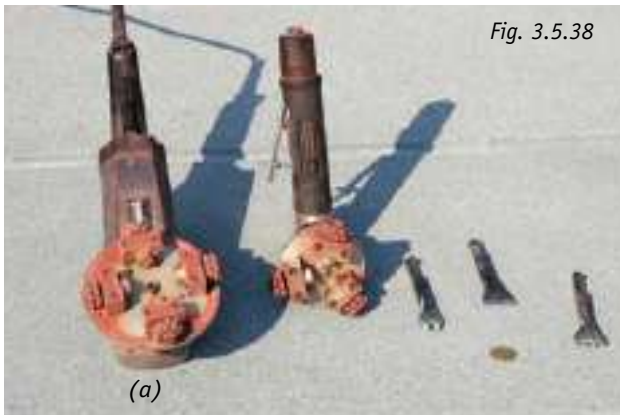

Fig. 3.5.38

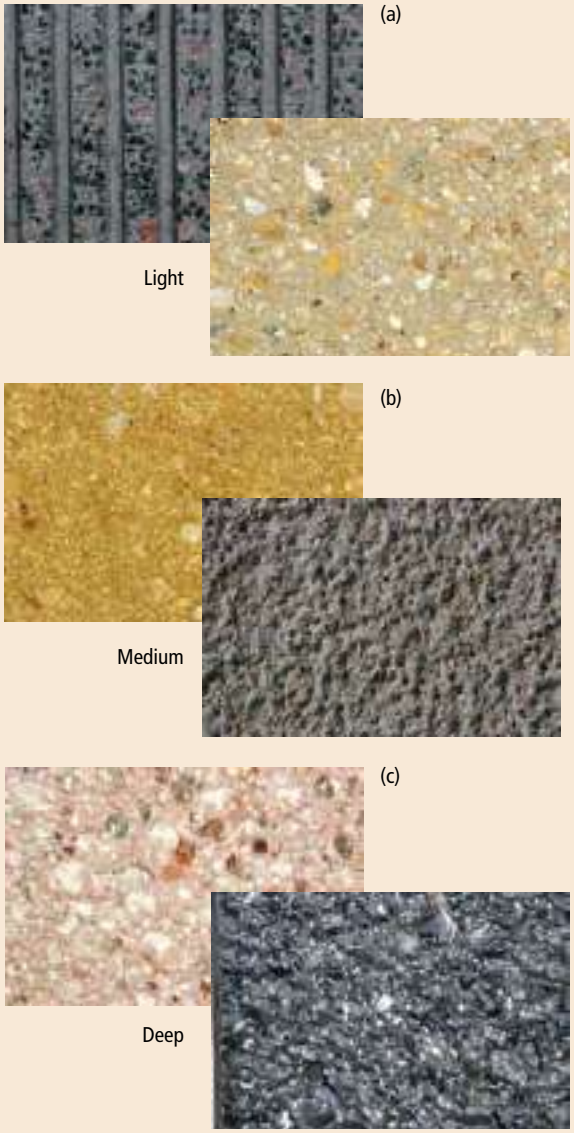

Fig. 3.5.39(a), (b) & (c) Depths of exposure.

Although a dense, fully-graded concrete mixture is desirable, bushhammering has been successfully applied to gap-graded concrete. Natural gravels are inclined to shatter, leading to bond failure and loss of aggregate particles; it is preferable to use a crushed aggregate concrete. Aggregates such as quartz and granite are difficult to bushhammer uniformly because of their hardness, and they may fracture into, rather than across, the concrete surface. Aggregates such as dolomite, marble, calcite, and limestone are softer and

Fig. 3.5.40 (a) & (b)
Bristol Myers Squibb Corporation
Mexico, D.F., Mexico;
Architect: Migdal Arquitectos;
Photos: (a) Alberto Moreno, (b) Paul Citrón.

more suitable for bushhammered surfaces. The comb chisel is suitable only for use with softer aggregates. Concrete containing soft aggregates cannot be satisfactorily point-tooled.

Bushhammering at outside corners may cause jagged edges. If sharp corners are desired, bushhammering should be held back from the corner a distance of 1 to 2 in. (25 to 50 mm) or more. It is quite feasible to execute tooling along specific lines. If areas near corners are to be tooled, this usually is done by hand because tools will not reach into inside corners, making this operation more expensive. Chamfered corners are preferred with tooled surfaces and a 1 in. (25 mm) chamfer may be tooled with care.

The façade elements in Fig. 3.5.40(a) and (b) were finished imitating a textured stone and were done with hand pneumatic chisel hammers. The textured finish surfaces resulted in excellent volume contrasts, where the handmade chiseling gave each panel its individuality without loosing the overall uniformity. The face mixture used combined orange- brown ochre and white natural stone aggregates with white cement.

Figure 3.5.41 shows a close-up of a bushhammered rib panel made with a yellow marble aggregate and white cement. The panels in Fig. 3.5.42(a) and (b) feature a bold texture of bushhammered diagonal ribs that alternate in direction at each horizontal band. The texture reveals much of the green aggregate and provides striking shade and shadow effects on the curved surfaces. The parapet panels also feature inset granite accents and narrow notches suggesting crenulations.

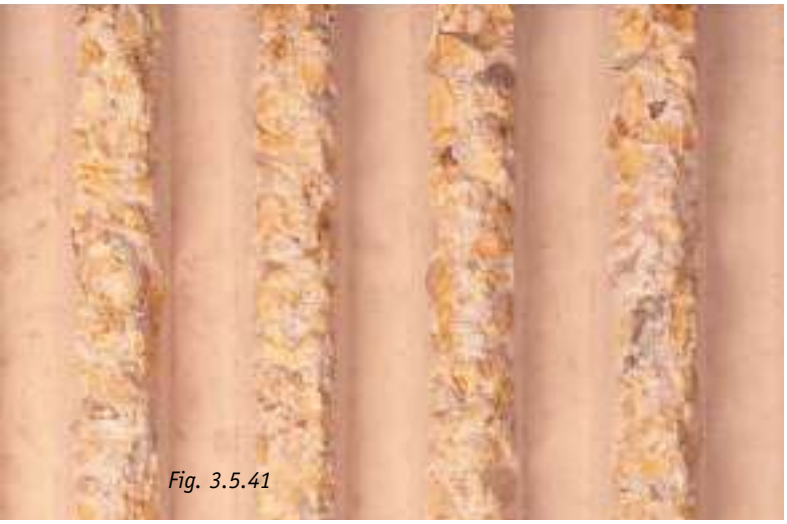

Fig. 3.5.41

Specifications for uniformity or non-uniformity of tooled finishes are extremely difficult to write and assistance should be sought from the precaster who is providing the tooled finish being specified.

Tooling removes a certain thickness of material, $^{3}/_{16}$ to $^{3}/_{8}$ in. (5 to 10 mm) on an average from the surface of the concrete, and may fracture particles of aggregate causing moisture to penetrate the depth of the aggregate particle. For this reason the minimum cover to the reinforcement should be somewhat larger than normally required. It is sometimes recommended that 2 in. (50 mm) of cover be provided (prior to tooling).

Fig. 3.5.42(a) & (b)
Michelin North American Corporate Headquarters
Greenville, South Carolina;
Architect: Odell Associates, Inc.;
Photos: Odell Associates, Inc.

Fig. 3.5.43

Fig. 3.5.44 Atlanta Central Library Atlanta, Georgia; Photo: Image courtesy of Marcel Breuer papers, 1920-1986 in the Archives of American Art, Smithsonian Institution.

Fig. 3.5.45

HAMMERED RIB OR FRACTURED FIN: A hammered rib or fractured fin finish may be produced by casting ribs on the surface of the panels and then using a hammer or bushhammer tool to break the ribs and expose the aggregate. The profile selection should be considered in relation to: (1) readability at varying distances, (2) the area of wall on which the finish is to be used in order to achieve the desired effect, and (3) the ability of the selected aggregate to penetrate the rib. Figure 3.5.43 shows a close-up of a fractured fin panel made with a yellow marble aggregate and white cement. The effect is a bold, deeply textured surface. Rib size measured at the outer face should be a maximum of 1 in. (25 mm), as larger sections are difficult to fracture. The ribs should not be narrower than $^5/_8$ in. (16 mm) or they may break off at their base without leaving any of the rib projecting. The ribs may be hammered from alternate sides, in bands, to obtain uniformity of cleavage, or randomly, depending on the effect required. The hammering technique employed, whether carried out in bands or in a random pattern, will alter the final appearance and should be specified by the designer—it may require a number of samples. There should be a definite plan, even with so-called random pattern because, unless care is exercised, an uneven shading effect on the concrete surface may be produced.

The diagonal striated pattern of the panels in Fig. 3.5.44 were designed for maximum color and texture. Light-gray limestone and white river gravel were used for color control. A warm buff sand added color to the gray matrix. Before finishing, the ribs were $^3/_8$ in. (10 mm) tall and $^3/_8$ in. (10 mm) wide at the base and repeated at $^1/_2$ in. (13 mm) intervals. The striated ribs were bushhammered to expose the aggregates. The size of the ribs and the size of the aggregate were carefully coordinated to achieve maximum coarse aggregate exposure. Figure 3.5.45 shows a close-up of the fractured fin.

Because this finish is labor intensive, it is expensive, but may be justified if the panels will be viewed up close on ground level walls or interior walls. On upper floors a similar effect may be achieved at much less cost by retarding or sandblasting the ribs. An effect similar to a fractured rib finish may be achieved less expensively by using forms or form liners that simulate the fractured ribs. The exposed, weathered look can then be achieved by chemical retardation or by sandblasting the rib surface (see Section 3.5.4). The panels can have a flat border area to accommodate variations in panel sizes, thus eliminating the need for any bulkheading in the ribbed area.

3.5.9 Sand Embedment

When bold and massive architectural qualities are desired, cobble stones ranging from 1½ to 8 in. (38 to 200 mm) in diameter (Fig. 3.5.46), or large, thin slices of stone such as fieldstones or flagstones (Fig. 3.5.47 [a] and [b]), may be exposed by the sand embedment technique. These large stones must be hand placed in a sand bed, or other special bedding material, at the bottom of the mold to a depth that keeps the backup concrete 25 to 35% of the stone's diameter from the face. This technique reveals the facing material and produces the appearance of a mortar joint on the finished panel. Spandrel units in Fig. 3.5.48(a) are composed of gray cement, local aggregates, and red/brown sand. Natural red/orange-colored sandstone is cast into areas of the panels, providing a pronounced texture and uncommon visual effect. Slabs of sandstone were broken and the pieces were hand-placed, and then sand was sifted into the joints (Fig. 3.5.48[b]).

Stones should be dense and evenly distributed on all surfaces. This is particularly important around corners, edges, and openings, as well as on the flat surfaces. To help achieve uniform distribution and exposure, all stones should be approximately one size. When facing materials are of mixed colors, their placement in the mold must be carefully checked for the formation of unintended patterns or local high incidence of a particular color. When using some stones, if it is the intention to expose a particular facet of the stone, placing should be checked with this in mind before the backup

Fig. 3.5.46

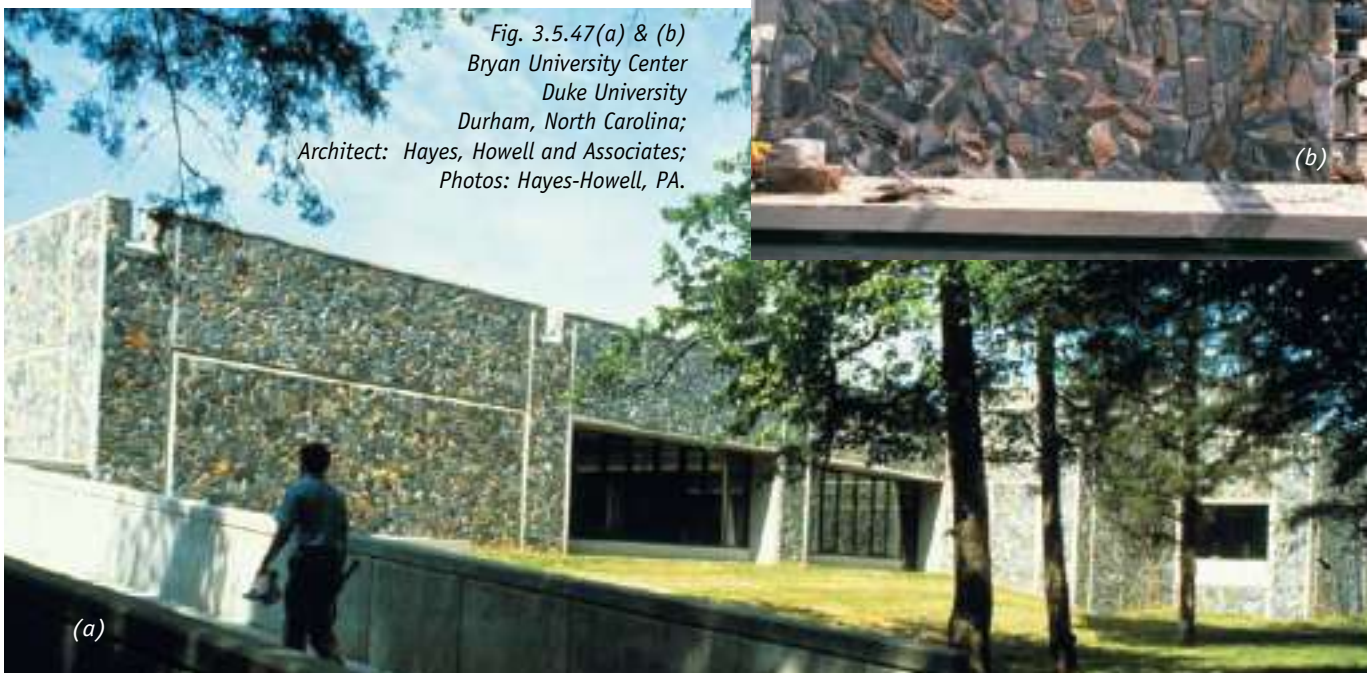

Fig. 3.5.47(a) & (b)
Bryan University Center
Duke University
Durham, North Carolina;
Architect: Hayes, Howell and Associates;
Photos: Hayes-Howell, PA.

(a)

(b)

concrete is placed. Care should be taken to ensure adequate cover to reinforcement following exposure.

Sample panels are essential for this technique, if only to ensure a compaction method that provides for full compaction without dislodgement of the stones. It is desirable that panels having this embedment technique and using large size stones be provided with a margin, generally smooth, off-form around all edges of the panel face. If that is not provided and the aggregates are taken right up to the arris of the panel, then subsequent washing and brushing may give a non-uniform, torn appearance to the arris.

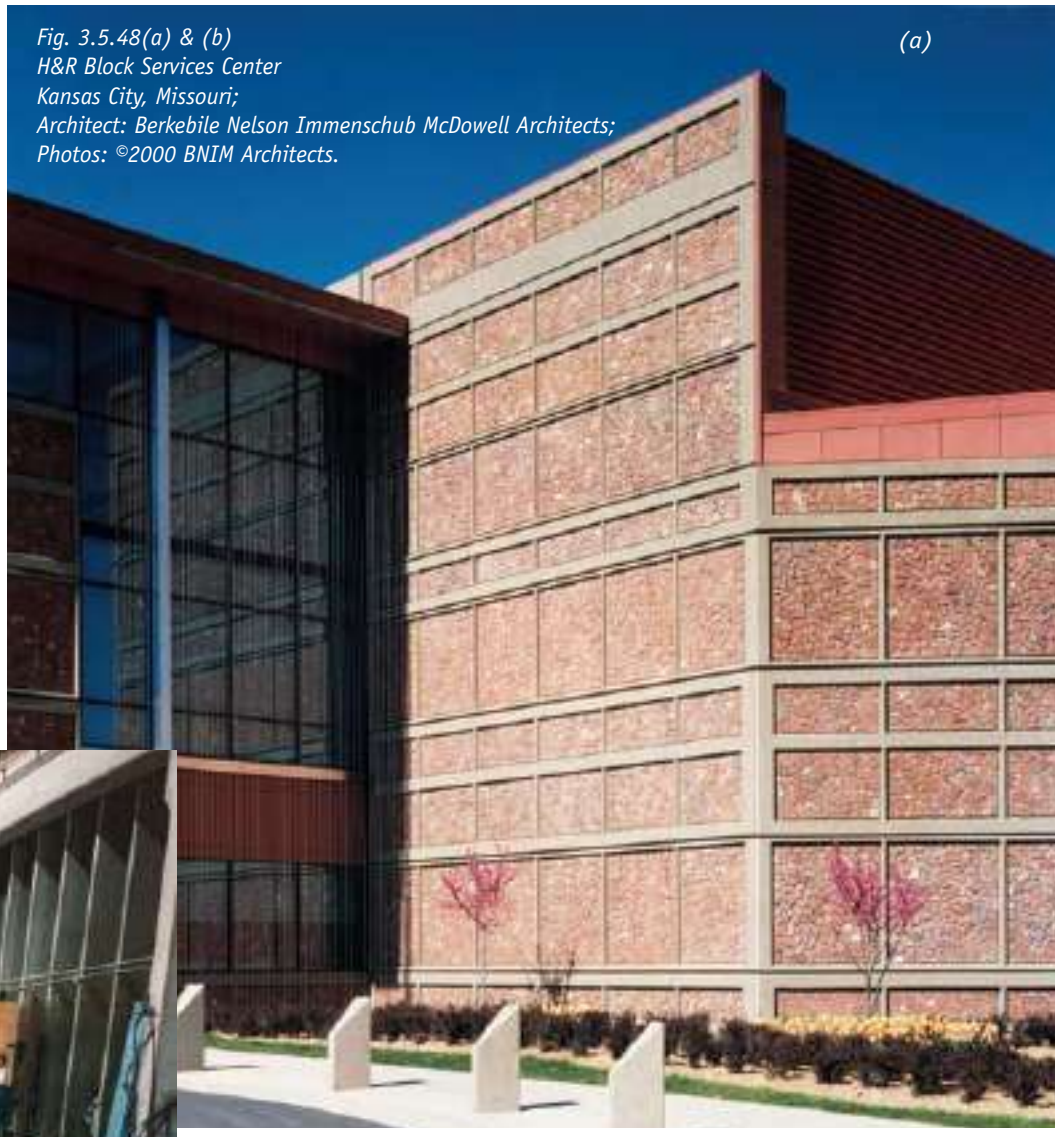

Fig. 3.5.48(a) & (b)
H&R Block Services Center
Kansas City, Missouri;
Architect: Berkebile Nelson Immenschub McDowell Architects;
Photos: ©2000 BNIM Architects.

3.5.10 Clay Product-Faced Precast Concrete

3.5.10.1 General

Clay product-faced precast concrete is being used increasingly today as another choice to obtain an aesthetic façade while blending in with surrounding structures. It gives the architect the flexibility to combine the pleasing visual appearance of traditional clay products with the strength, versatility, and economy of precast concrete. Among the types of materials that can be embedded in the precast concrete are brick, ceramic tile, porcelain, and architectural terra cotta. These clay product-facings may cover the exposed panel surface entirely or only part of the concrete face, creating accents. The use of clay product–faced precast concrete

panels began in the early- to middle-1960s. These early projects have not needed tuckpointing or sealing. The combination of precast concrete and clay products offers several important benefits over site-laid-up masonry.

Precasting techniques allow complex and intricate details such as arches, radii, ornate corbels, and numerous bonding patterns to be incorporated into the finished panel (Fig. 3.5.49). This freedom of aesthetic expression could not economically be accommodated with site-laid-up masonry. A prefabricating approach ensures that high-priced and time-consuming building skills are transferred to the controlled conditions of the plant and away from the critical path of on-site activities.

Precasting also allows a high level of dimensional precision and quality control. Concrete mixtures and batching, together with curing conditions, can be tightly controlled, whereas site-laid masonry may have variable curing and mortar qualities.

Plant production provides for year-round work under controlled temperature conditions, negating any on-site delays due to inclement weather or incurring the expense of on-site weather protection. It also allows the structure to be winterized in advance, with floor topping and finishing trades continuing without any weather delays. Clay product-faced precast concrete can eliminate the need for costly on-site scaffolding and greatly reduce the duration of masonry cladding time. Also, site disturbance, construction debris, and use of toxic cleaners are reduced. Precast concrete design allows gravity loads to be located at columns, eliminating expensive lintels and mid-span loading on structure. Brick-faced precast concrete panels eliminate dovetail anchors, flashing, weep holes, and the need for lintels.

Fig. 3.5.49

Panel configurations include a multitude of shapes and sizes: flat panels, C-shaped spandrels, soffits, arches, and U-shaped column covers. Repetitive use of any particular shape also lowers costs dramatically. Returns on spandrels or column covers may be produced by the sequential (two-stage) casting method or as a single cast depending on the height of the return. Panels may serve as cladding or may be loadbearing, supporting floor and roof loads.

3.5.10.2 General considerations

Structural design, fabrication, handling, and erection considerations for clay product–faced precast concrete units are similar to those for other precast concrete walls panels, except that consideration must be given to the dimensional layout of the clay product material and its embedment in the concrete. The physical properties of the clay products must be compared with the properties of the concrete backup. These properties include the coefficient of thermal expansion, modulus of elasticity, and volume change due to moisture, along with strict adherence to tight dimensional tolerances.

For design purposes, clay product–faced precast concrete panels may be designed as concrete members that neglect the structural action of the face veneer. The thickness of the panel is reduced by the thickness of the veneer, and design assumptions exclude consideration of differential shrinkage or differential thermal expansion. However, if the panel is to be prestressed, the effect of composite behavior and the resulting prestress eccentricity should be considered in design. Reinforcement of the precast concrete backup should follow recommendations for precast concrete wall panels relative to design, cover, and placement.

The height and length of the panels should be multiples of nominal individual masonry unit heights and lengths for effective cost control in the precast concrete production process. The actual specified dimensions may be less than the required nominal dimensions by the thickness of one mortar joint. For economical production, the precaster should be able to use uniform and even coursing without cutting any units vertically or horizontally except as necessary for precast panel joints and bond patterns. The PCI Standard for embedded brick in precast concrete panels should be specified to ensure size uniformity, long term durability and material compatibility.

PCI Standard for Thin Brick

The objective of this standard is to outline material standards and specification criteria for brick manufacturers to meet when supplying materials to precast concrete manufacturers. The intent is to establish acceptable dimensional tolerances and consistent testing standards for brick embedded in precast concrete systems. The brick manufacturers must confirm through the provision of independent test results that their brick products comply with the PCI Standard. The PCI Standard should appear in all specifications as the new, approved industry standard. Brick manufacturers have agreed to promote the compliance of their brick with this new standard.

The following parameters have been established based on the successful use of embedded brick in precast concrete projects. The parameters set forth for use in these proposed standards are attainable brick properties that have been derived with input from brick manufacturers, precasters, engineers, and architects, as well as consideration of existing test results.

A. Thin Brick Units: PCI Standard, not less than $^1/_2$ in. (13 mm) nor more than 1 in. (25 mm) thick with an overall tolerance of plus 0 in., minus 1/16 in. (+0 mm, -1.6 mm) for any unit dimension 8 in. (200 mm) or less and an overall tolerance of plus 0 in., minus 3/32 in. (+0 mm, -2.4 mm) for any unit dimension greater than 8 in. (200 mm) measured according to ASTM C 67.

1. Face Size: Modular, $2^1/_4$ in. (57 mm) high by $7^5/_8$ in. (190 mm) long.
2. Face Size: Norman, $2\ ^1/_4$ in. (57 mm) high by $11^5/_8$ in. (290 mm) long.
3. Face Size: Closure Modular, $3^5/_8$ in. (90 mm) high by $7^5/_8$ in. (190 mm) long.
4. Face Size: Utility, $3^5/_8$ in. (90 mm) high by $11^5/_8$ in. (290 mm) long.
5. Face Size, Color, and Texture: **[Match Architect's approved samples] [Match existing adjacent brickwork]**.
   a. <**Insert information on existing brick if known.**>
6. Special Shapes: Include corners, edge corners, and end edge corners.
7. Cold Water Absorption at 24 hours: Maximum 6% when tested per ASTM C 67.
8. Efflorescence: Provide brick that has been tested according to ASTM C 67 and rated "not effloresced."
9. Out of Square: Plus or minus 1/16 in. (+/- 1.6 mm) measured according to ASTM C 67.
10. Warpage: Consistent plane of plus 0 in., minus $^1/_{16}$ in. (+0, -1.6 mm).
11. Variation of Shape from Specified Angle: Plus or minus 1 degree.
12. Tensile Bond Strength: Not less than 150 psi (1.0 MPa) when tested per modified ASTM E 488. Epoxy steel plate with welded rod on a single brick face for each test.
13. Freezing and Thawing Resistance: No detectable deterioration (spalling, cracking, or chafing) when tested in accordance with ASTM C 666 Method B.
14. Modulus of Rupture: Not less than 250 psi (1.7 MPa) when tested in accordance with ASTM C 67.
15. Chemical Resistance: Provide brick that has been tested according to ASTM C 650 and rated "not affected".
16. Surface Coloring: Brick with surface coloring shall withstand 50 cycles of freezing and thawing per ASTM C 67 with no observable difference in applied finish when viewed from 20 ft (6 m).
17. Back Surface Texture: **[Scored], [Combed], [Wire roughened], [Ribbed], [Keybacked], [Dovetailed]**.

Test sample size and configuration shall conform to the following parameters in order to validate compliance by brick manufacturer with PCI Standard for use in embedded brick precast concrete systems:

1. Minimum number of tests specimens: Comply with appropriate specifications except for freeze-thaw and tensile bond strength tests on assembled systems.
2. Minimum number of test specimens for freeze-thaw and tensile bond strength test: Ten (10) assembled systems measuring 8 x 16 in. (200 mm x 405 mm) long with the brick embedded into the concrete substrate (assembled system). The ten (10) assembled systems are divided into 5 Sample **A** assemblies and 5 Sample **B** assemblies. The precast concrete substrate shall have a minimum thickness of $2^1/_2$ in. (63 mm) plus the embedded brick thickness. The precast concrete shall have a minimum compresssive strength of 5000 psi (34.5 MPa) and 4 to 6% entrained air. The embedded brick coursing pattern for testing purposes shall be modular size brick on a half running bond pattern with a formed raked joint geometry of no less than $^3/_8$ in. (9 mm) wide and a depth no greater than $^1/_4$ in. (6 mm) from the exterior face of the brick. One brick from the center of each Sample **A** assembly shall be tested for tensile bond strength, Item #12. Each Sample **B** assembly shall first be tested for freeze-thaw resistance, Item #13 and then one brick from the center of each Sample **B** assembly shall be tested for tensile bond strength, Item #12.

The appearance of clay product–faced precast concrete panels is achieved principally by the selected clay product, with type, size, and texture contributing to overall color. Also, the degree to which the clay product units are emphasized will depend upon the profile and color of the joint between units. The Brick Institute of America (BIA) recommends concave joints in all masonry projects. Due to forming requirements and material tolerances, it is preferable that joints between clay products be not less than $^3/_8$ in. (10 mm).

The joints between panels are usually butt joints. Corners are usually achieved by using brick returns equal to the length of the brick module. The final element in the appearance of the panel is the 5000 psi (34.5 MPa) concrete used in the joints. Hand-tooled joints may be simulated by form liners or joints may be tuckpointed after forms are stripped, however this may add to the cost and maintenance of the panel.

The contract documents should clearly define the scope of clay product sizes, coursing patterns, and placement locations. Both stack and running bond patterns have been used widely in precast concrete panels. These patterns can be interchanged with soldier courses, basket weave, or herringbone patterns. Running bond patterns are typically less costly and visually more appealing when courses start and finish with half or full brick. This approach avoids cutting and allows matching adjacent spandrels or column covers. Also, providing a narrow strip of exposed concrete at the edges of the panel helps reduce the visual impact and potential difficulty in aligning brick joints between precast concrete units. Vertical alignment of joints, especially with stack bond, requires close clay product tolerances or cutting of brick to the same length.

3.5.10.3 Clay product properties

Physical properties of clay products vary depending on the source of clay, method of forming, and extent of firing. Table 3.5.1 shows the range of physical properties of clay products. Because clay products are subject to local variation, the designer needs to obtain information on the specific brick being considered to ascertain if the variations are acceptable.

As the temperature or length of the burning period is increased, clays burn to darker colors, and compressive strength and modulus of elasticity are increased. In general, the modulus of elasticity of brick increases with compressive strength to a compressive value of approximately 5000 psi (34.5 MPa); after that, there is little change.

3.5.10.4 Clay product selection

Precasters should be consulted early in the design stage to determine available colors, textures, shapes, sizes, and size deviations of clay products, as well as manufacturing capability for special shapes, sizes, and tolerances. The specification should identify the color, size, and manufacturer of the clay product. Usually the precast concrete producer buys the clay products and knows which products are able to conform to the PCI Standard for embedded brick in precast concrete.

PCI Standard thin-brick veneer units $^1/_2$ to 1 in. (13 to 25 mm) thick are typically used and are available in various sizes, colors, and textures. Thin brick conforming to PCI Standard are actually a tile and have lower water absorption than conventional brick. In addition, thin brick is less susceptible than conventional brick to freezing and thawing issues, spalling, and efflorescence.

Stretcher, corner, or three-sided corner units are typi-

Table 3.5.1. Range of physical properties of clay products.

Type of Unit	Compressive Strength, psi	Modulus of Elasticity, psi	Tensile Strength, psi	Coefficient of Thermal Expansion in./in. °F
Brick	3000 – 15,000	$1.4 – 5.0 \times 10^6$	Approx. 0.1 compressive strength	4×10^{-6}
Ceramic or Quarry tile	10,000 – 30,000	7×10^6		$2.2 – 4.1 \times 10^{-6}$
Glazed wall tile	8000 – 22,000	$1.4 – 5.0 \times 10^6$		$4.0 – 4.7 \times 10^6$
Terra cotta	8000 – 11,000	$2.8 – 6.1 \times 10^6$		4×10^{-6}

Note: 1 psi = 0.006895 MPa.

Fig. 3.5.50 Thin brick units.

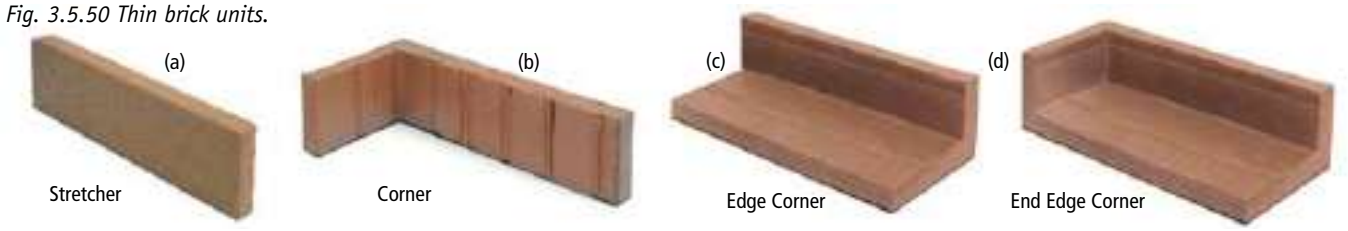

cally available in a variety of color ranges (Fig. 3.5.50). The face sizes normally are the same as conventional brick and, therefore, when in place, yield the aesthetics of a conventional brick masonry wall with the superior performance of precast concrete.

The most common brick face size is the modular. The utility face size is popular for use in large buildings because productivity is increased, and the unit's size decreases the number of visible mortar joints, thus giving large walls a different visual scale. The PCI Standard contains the most of popular thin brick face sizes. Contact precaster to determine availability of desired color or texture in the face sizes selected.

Some bricks (TBS or FBS, for example) are too dimensionally inaccurate for applications with precast concrete panels. These bricks typically have high absorption rates that cause greater chances of efflorescing and freezing-and-thawing spalling. They conform to an ASTM specification suitable for site laid-up applications, but they are not manufactured accurately enough to permit their use in a preformed grid that positions bricks for a precast concrete panel. Tolerances in an individual TBX or FBX brick of ± $^{5}/_{32}$ in. (±4 mm) or more cause problems for the precast concrete producer. Brick (TBX and FBX) are available from some suppliers to the close tolerances necessary for precasting.

FBS and FBX are designations for facing brick types that control tolerance, chippage, and distortion. Type FBS is brick for general use in masonry while Type FBX is brick for general use in masonry where a higher degree of precision and lower permissible variation in size than permitted for Type FBS is required (see ASTM C 216). For thin-veneer brick units, Type TBS (Standard) is thin-veneer brick for general use in masonry while Type TBX (Select) is thin-veneer brick for general use in masonry where a higher degree of precision and lower permissible variation in size than permitted for Type TBS is required (see ASTM C 1088).

Close tolerances also can be obtained by saw-cutting each brick, but this increases costs substantially.

FBX brick may be split into soaps (half brick). Often only one side of the brick can be used as the facing veneer. The use of soaps will increase the thickness and weight of the panel. Whole bricks are not recommended for use in precast concrete because of the difficulty in adequately filling the mortar joints and the potential for freezing-and-thawing spalling.

Figures 3.5.51 through 3.5.60 illustrate various projects with applications of brick-faced precast concrete panels.

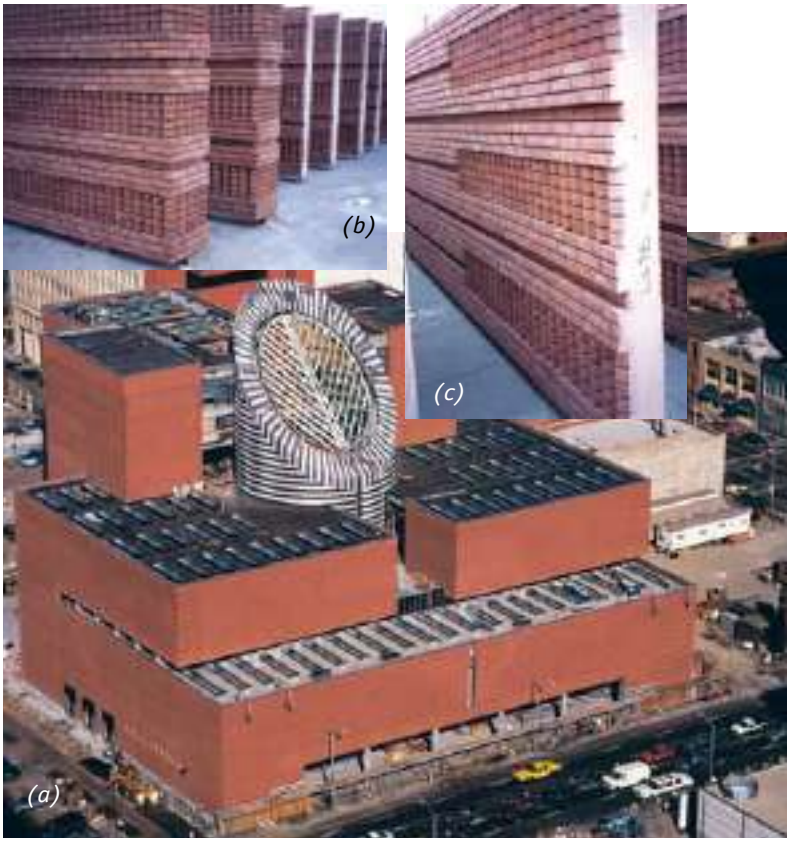

Fig. 3.5.51(a), (b) & (c)
San Francisco Museum of Modern Art, San Francisco, California; Architect: Mario Botta, Design Architect; Hellmuth, Obata & Kassabaum, P.C. (HOK) Architect of Record; Photos: Perretti & Park Pictures.

The patterned façade on the museum (Fig. 3.5.51) is composed of bands of rusticated red brick accented by flamed white and black granite on the upper level. The 1-in.-thick (25 mm) bricks are cast in 9-in.-thick (225 mm) precast concrete panels. The bricks, some 600,000 in all, were rolled in sand before baking to give them a grainy finish. Most panels measure 10 × 28$^1/_2$ ft (3 × 8.7 m) and contain 1500 to 2300 bricks per panel. The museum's horizontality was emphasized by raking the mortar joints between brick courses (Fig. 3.5.51[b] and [c]). These figures also show the flat and corner panels with corner brick, as well as the close-ups of the façade patterns.

Fig. 3.5.52(a), (b) & (c) Merrill Lynch Hopewell Campus Pennington, New Jersey; Architect: Thompson, Venulett, Stainback & Associates (TVS); Photos: Brian Gassel/TVS.

The eight office and four assembly buildings in the 1.5 million ft^2 (139,300 m^2) campus shown in Fig. 5.3.52(a) are clad with 6882 clay product–faced architectural precast concrete panels totaling 548,623 ft^2 (50,967 m^2). The precast concrete panels embedded with thin brick provided a basic kit of parts. The kit of parts did not just rely on basic columns and spandrels common in office buildings but instead was based on typical modules: a typical 30 ft (9 m) bay with a fourth story variation, an entry bay, a gable end with curtain wall, a gable end with precast concrete cladding, stair towers, and arcades. The elements are combined in different floor plan configurations and building heights to achieve the diversity of sizes and shapes of the required facilities. The ability to combine the brick and the trim in a single panel using thin bricks and buff-colored, sandblasted precast concrete bands was a key element in the building design. The typical bay was designed to have horizontal joints visible only where brick relief joints would normally be located and the vertical spandrel joints are located behind recessed downspouts (Fig. 3.5.52[b]). The panels also clad four parking structures and the thin-brick panels were brought into the dramatic main dining room in the assembly buildings (Fig. 3.5.52[c]). With multiple buildings under construction simultaneously, having brick-clad precast concrete panels produced off-site helped to reduce the on-site work required. That helped reduce the amount of people, equipment, and materials on the job and ultimately created a more manageable, cleaner, and safer worksite.

Fig. 3.5.54
Centergy at Technology Square
Atlanta, Georgia;
Architect: Smallwood, Reynolds, Stewart, Stewart & Associates Inc.;
Photo: Gabriel Benzur.

The store in Fig. 3.5.53 features insulated brick-faced precast concrete panels highlighted with bands of 4 × 12 in. (100 × 300 mm) utility brick at the entry that alternate with the precast concrete tones. The panels were designed as shearwalls and have a light sandblast finish on the accent stripes. Brick-faced precast concrete panels were selected because the job schedule was able to be reduced by four months versus conventional masonry.

Fig. 3.5.53
Nordstrom Palm Beach Gardens; Palm Beach Gardens, Florida;
Architect: Callison Architecture Inc.; Photo: Vern Smith.

Brick-faced precast concrete panels were specified for the office complex in Fig. 5.3.54 over traditional brick construction for its cost efficiencies, speed of construction, and simplified logistics. The complex contains three structures: a 6-story office building, a 14-story office tower, and an 8-story parking structure that sits behind the two office buildings. The bricks are $^5/_8$ in. (16 mm) thick and are the skin of 6-in.-thick (150 mm) concrete panels. Approximately 300 brick-faced precast concrete panels, including some as long as 40 ft (12.2 m) and weighing 15 ton (13.6 t) form the shell of the complex. Designed as a nexus for a thriving high-tech corridor, the project connects Georgia Tech University with a burgeoning business and residential community. Architectural precast concrete panels helped mix town and gown in a style that fit both neighborhoods.

Fig. 3.5.55
Hull Street Parking Deck
Athens, Georgia;
Architect: Smallwood, Reynolds, Stewart, Stewart & Associates;
Photo: Jim Roof.

The 950-vehicle parking structure (Fig. 3.5.55) was designed to address a university town's acute parking shortage while blending with the classical architecture of the campus buildings. An all-precast concrete structure was selected due to aesthetics, economy, and speed of construction. The fast-track schedule took advantage of the ability to cast components, which included both structural and exterior façade components, before the completed design package was issued. Inset thin brick was used on upper-level panels, with the panels cast with the brick in place in the molds, creating a one-step operation. Lower floors feature panels

Fig. 3.5.56
Woodmont High School, Piedmont, South Carolina; Architect: Perkins & Will, Design Architect; and Craig Gaulden Davis, Architect of Record; Photos: Craig Gaulden Davis Architects/Photographer – Working Pictures.

with a limestone-like appearance that was achieved with a buff-colored finish, light sandblast texture, and detailed reveals. This combination was accented by tall, classic columns and arched windows at the stair tower, which draw attention and create a dramatic appearance. Only a few different sizes and shapes of precast concrete panels were required, speeding production and reducing costs by minimizing the number of molds. Material needs also were reduced by using the exterior precast concrete as both the façade and as loadbearing panels for the interior double tees.

The high school in Fig. 3.5.56(a) and (b) is a new 250,000 ft^2 (23,000 m^2) school with a core for 2000 students. The thin-set red brick on the exterior was used to give the precast concrete a traditional feel that appealed to the community. Sandblasted reveals between the brick panels organize the different levels of the building and reduce the scale of the precast concrete panels. A stack bond masonry pattern was chosen to minimize the visibility of joints between the panels. Creating a segmented curve along the exterior wall of the media center gave the effect of the school opening its arms to the public and calling attention to the main entrance (Fig. 3.5.56[a]). The insulated sandwich panels of the media center allowed the interior finish to be exposed painted precast concrete (Fig. 3.5.56[b]).

Design features of the seven-story medical office building in Fig. 3.5.57 include embedded, multi-colored brown brick laid in a series of patterns—stacked, running, Flemish bond, and soldier coursing—created to minimize the scale of the building. The brickwork is highlighted by blocks of acid-etched precast concrete accents and bands, as well as curved column covers.

Fig. 3.5.57
Sparrow Professional Building
Lansing, Michigan;
Architect: Albert Kahn Associates Inc.;
Photo: Glen Calvin Moon/Albert Kahn Associates Inc.

The three-story building in Fig. 3.5.58 is clad with thin brick–faced precast concrete panels that incorporate precast concrete sills, jambs, and headers, as well as banding in monolithic units. Radial brick were cast into radiused precast concrete panels to create the smooth flow around corners.

Fig. 3.5.58
S. C. Johnson Worldwide Headquarters, Mt. Pleasant, Wisconsin;
Architects: Zimmerman Design Group; and Hellmuth, Obata & Kassabaum, P.C.; Photo: Edward Purcell.

Fig. 3.5.59(a) & (b)
Garfield Heights High School Academic and Health and Physical Education Buildings, Garfield Heights, Ohio; Architect: Arcadis FPS; Photos: Arcadis FPS, Cleveland.

Fig. 3.5.60
Miller Park, Milwaukee, Wisconsin; Architect: HKS Sport & Entertainment Group; NBBJ Sports & Entertainment; and Eppstein Uhen Associated Architects (joint venture); Photo: Eric Oxendorf.

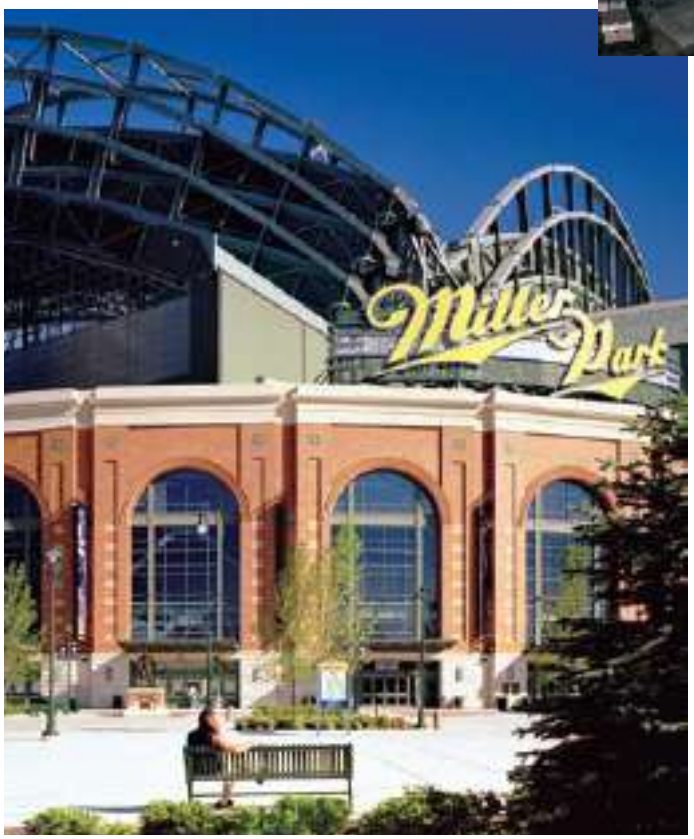

The school project in Fig. 3.5.59(a) and (b) consists of two buildings: a three-story academic building and a one-story health and physical education building. Both buildings are clad with 10-in.-thick (250 mm), thin brick–faced, insulated precast concrete panels. The panels consist of 5-in.-thick (125 mm) concrete back wythe, 2 in. (50 mm) of insulation, and a 3 in. (75 mm) concrete face wythe embedded with thin brick. The 5 in. (125 mm) back wythe was strong enough to handle all precast concrete connections and lifting inserts without penetrating the insulation, ensuring the maximum insulating value.

The 42,500-seat home of the Milwaukee Brewers is a modern engineering marvel with traditional baseball flavor. Its unique, fan-shaped structure features the first retractable roof of its kind in the world. The building's façade features radiused, brick-faced architectural precast concrete panels to convey the classic look of past ballparks combined with wide, arched windows reminiscent of historic European train stations (Fig. 3.5.60).

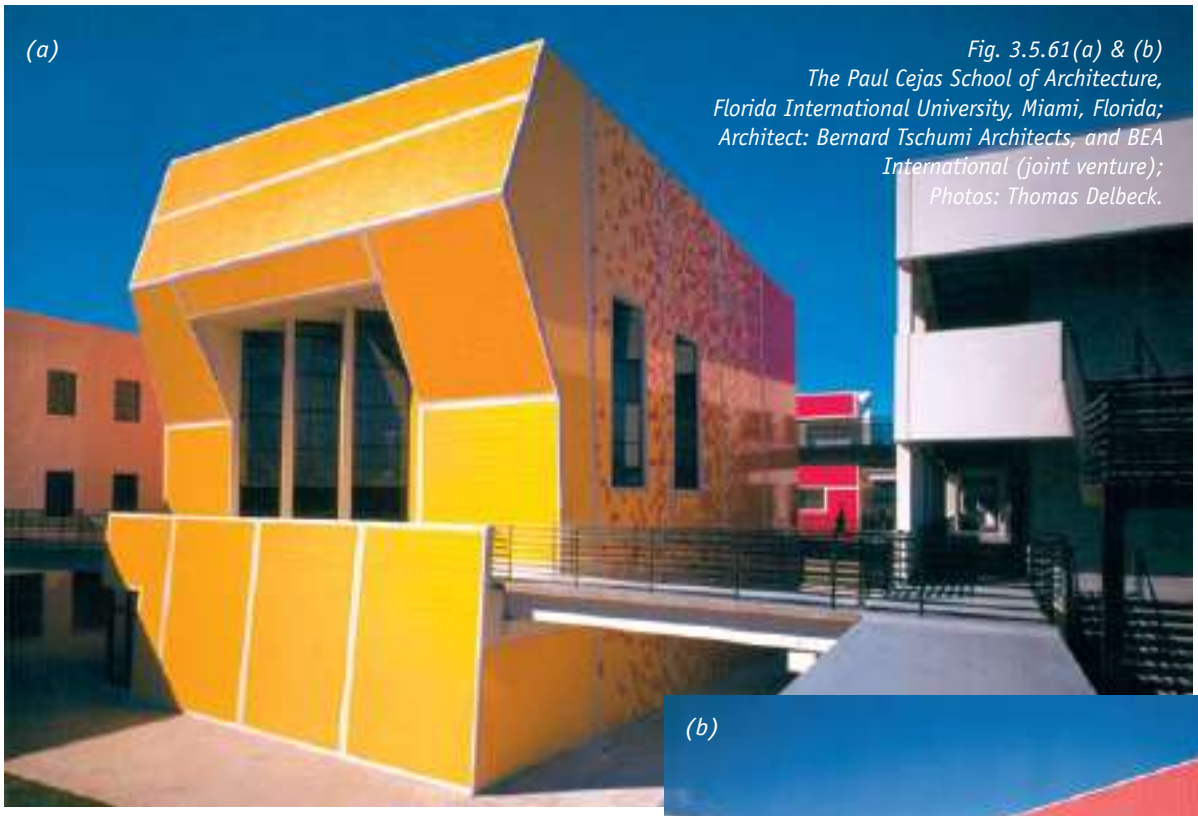

Fig. 3.5.61(a) & (b)
The Paul Cejas School of Architecture, Florida International University, Miami, Florida; Architect: Bernard Tschumi Architects, and BEA International (joint venture); Photos: Thomas Delbeck.

Glazed and unglazed ceramic tile units should conform to American National Standards Institute (ANSI) A 137.1, which includes American Society for Testing and Materials (ASTM) test procedures and provides a standardized system to describe the commonly available sizes and shapes, physical properties, basis for acceptance, and methods of testing. Ceramic tiles are typically $^3/_8$ to $^1/_2$ in. (10 to 13 mm) thick, with a $1^1/_2$% tolerance on the length and width measurements. When several sizes or sources of tile are used to produce a pattern on a panel, the tiles must be manufactured on a modular sizing system in order to have joints of the same width.

Glazed units may craze from freezing and thawing cycles or the bond of the glaze may fail due to exposure to extreme environmental conditions. The body of a tile (not the glazed coating) must have a water absorption of less than 3% (measured using ASTM C 373) to be suitable for exterior applications. However, low water absorption alone is not sufficient to ensure proper selection of exterior ceramic tiles. As a result, when ceramic tile is required for exterior use, the manufacturer should be consulted for frost-resistant materials for exterior exposure. Glazes are covered by ASTM C 126 and tested in accordance with ASTM C 67.

The gallery and lecture halls of the School of Architecture in Fig. 3.5.61(a) and (b) are not traditional precast concrete buildings, structurally or architecturally, although the walls are loadbearing and support floor and roof double tees. The architectural expression is colorful ceramic tile and a variety of outdoor spaces. The architect sculpted a pair of engaging forms, then wrapped them in red, orange, and yellow ceramic tile that gives the ensemble a hot, Latin flair. The vivid yellow and red structures are clad with 8 × 8 in. (200 × 200 mm) ceramic tiles with brilliant color variations. Tiles were recessed into the precast concrete, which produced a tightly sealed flush edge joint at the lightly sandblasted panel borders.

Fig. 3.5.62(a) & (b)
Prospect Heights Care Center
Hackensack, New Jersey;
Architect: Herbert Beckhard Frank Richlan & Associates;
Photos: Norman McGrath Photograph.

Fig. 3.5.63
Saks Parking Garage, Kansas City, Missouri; Architect: Gastinger Walker Harden Architects; Photo: Mike Sinclair.

The façades of the building in Fig. 3.5.62(a) and (b) are sheathed in precast concrete from the ground up. A number of panels are gull wing–shaped with wings containing windows angling outward at 45° on each end. These panels are 24 ft (7.5 m) long and 7 ft 3 in. (7.8 m) high. The panels above ground level have 8 × 8 in. (200 × 200 mm) brick-colored tile inserts, adding a degree of contrast with the concrete while blending harmoniously with the predominately brick neighboring buildings. The use of clay tiles inset within the precast concrete panels provides a greater variety of color and texture than standard precast concrete panels. The clay tiles feature keybacks around which the concrete set, assuring permanent adherence. The end panels were formed with concrete returns to avoid miters or revealing actual panel thickness.

The mixed-use, five-level parking structure in Fig. 3.5.63 was designed to blend with the surrounding

Fig. 3.5.64(a) & (b)
88 Kearney Street
San Francisco, California; Architect: Skidmore, Owings and Merrill;
Photos: Skidmore, Owings and Merrill San Francisco.

structures with their highly detailed and ornamented Spanish architecture. Areas of smooth texture on the architectural precast concrete panels provided a base for tile patterns to enliven the façade and create an overall structure that serves to further enrich the area.

No ASTM standards exist for terra cotta, but units should meet the minimum requirements published by the Architectural Terra Cotta Institute. Architectural terra cotta is a custom-made product and, within certain limitations, is produced in sizes for specific jobs. Two thicknesses of terra cotta are usually manufactured: 1¼-in.-thick (32 mm) and 2¼-in.-thick (56 mm) units. Sizes range from 20 to 30 in. (500 to 760 mm) for 1¼ in. units to 32 × 48 in. (810 × 1220 mm) for 2¼ in. units. Other sizes used are 4 or 6 ft × 2 ft (1.2 or 1.8 m × 0.6 m). Tolerances on length and width are a maximum of ± 1/16 in. (+1.6 mm) with a warpage tolerance on the exposed face (variation from a plane surface) of not more than 0.005 in. (0.12 mm) per 1 in. (25 mm) of length. The use of terra cotta–faced precast concrete panels for restoration and new construction is illustrated in Fig. 3.5.64, 3.5.65, and 3.5.66.

Built in 1906, the six-story building in Fig. 3.5.64(a) and (b) is considered one of San Francisco's architectural landmarks. For that reason, it was decided the building's terra cotta façade would be preserved on an otherwise all-new structure of slightly taller height. The terra cotta was taken off the building, piece by piece and identified for subsequent reassembly on new precast concrete panels. Stainless steel wires were looped through the back ribs of the terra cotta pieces and projected into the backup concrete to anchor the pieces to the concrete.

Fig. 3.5.65(a), (b) & (c)
Sacramento County Systems and Data Processing
Sacramento, California; Architect: HDR Architecture Inc. formerly Ehrlich-Rominger; Photos: HDR Architecture Inc.

Precast concrete panels with 1-in.-thick (25 mm) brick on 5-in.-thick (125 mm) concrete panels along with glazed terra cotta on the spandrels and mullions clad the nine-story building in Fig. 3.5.65(a). Panels of light and deep sandblast finishes tied both systems together. See Fig. 3.5.65(b) and (c) for a close-up of the terra cotta units.

For the sake of the traditional look of the historic Michigan Avenue streetwall's appearance, terra cotta–faced precast concrete was used for the 260,000 ft^2 (24,200 m^2) retail/cinema building (Fig. 3.5.66[a]), encompassing an entire block. The terra cotta pieces are a variety of shapes and sizes, with some flat, fluted, or round (Fig. 3.5.66[b]). The backs of the extruded pieces were flat and holes were drilled in the terra cotta for insertion of stainless steel pins. The terra cotta units were placed in a mold and 10 in. (250 mm) of concrete was then cast to create a panelized system.

Variations in brick or tile color will occur within and between lots. The clay product supplier must preblend any color variations and provide units that fall within the color range specified and approved by the architect for the project. Defects such as chips, spalls, face score lines, and cracks are common with brick, and the defective units should be culled from the bulk of acceptable units by the clay product supplier according to the architect's requirements and in accordance with applicable ASTM specifications. Should minor damage occur to the clay product face during shipping, handling, or erection, field remedial work can be accomplished, including replacement of individual clay products. Units may be chipped out and new units installed using an epoxy, dry-set, or latex portland cement mortar.

3.5.10.5 Design considerations

The clay product surfaces are important in order to bond to the backup concrete. Textures that offer a good bonding surface include a:

- Scored finish, in which the surface is grooved (ribbed) or dovetailed (keybacked) as it comes from the die
- Combed finish, in which the surface is altered by parallel scratches
- Roughened finish, which is produced by wire cutting or wire brushing to remove the smooth surface or die skin from the extrusion process.
- A brick wire cut (through extruded holes in whole bricks) to provide two (half) soaps.

With thin- and half-brick units, no metal ties or weeps are required to attach them to the concrete because adequate bond is achieved. In general, clay products that are cast integrally with the concrete have bond strengths exceeding that obtained when laying units in the conventional manner (clay product to mortar). In pullout tests, the brick fails or shears before it pulls out of the concrete. It is necessary, however, to be careful to not entrap air or excess water-caused voids. These voids could reduce the area of contact between the units and the concrete, thereby reducing bond.

The bond between the clay product facing and the concrete depends on the absorption of the clay product and the concrete's water-cement ratio. Either low or high absorption will result in a poor bond. Half bricks with a water absorption of 6 to 9% obtained by five-hour boiling provide good bonding potential. Thin bricks should have a water absorption less than 6% per the PCI Standard.

Half bricks with an initial rate of absorption (suction) of less than 30 g/30 in.^{2} per min (30 g/194 cm^2 per min), when tested in accordance with ASTM C 67, are not required to be wetted. However, brick with high suction or with an initial rate of absorption in excess of 30 g/30 in.^{2} per min should be wetted prior to placement of the concrete. This will reduce the amount of mixture water absorbed and improve bond. Unglazed quarry tile and frost-resistant glazed wall tiles generally do not need to be wetted. Terra cotta units should be soaked in water for at least one hour prior to placement to reduce suction and they should be damp at the time of concrete placement.

Because of the differences in material properties between the facing and concrete, clay product–faced concrete panels may be more susceptible to bowing than homogeneous concrete units. However, panel manufacturers have developed design and production procedures to minimize bowing.

When removed from the kiln after firing, clay bricks will begin to permanently increase in size as a result of absorption of atmospheric moisture. The expansion of the clay products can be absorbed by four simultaneously occurring negative dimensional changes of the clay product and concrete:

1. Drying shrinkage of the concrete
2. Elastic deformation of the concrete under stress
3. Creep of the concrete under stress
4. Elastic deformation of the clay product under stress

In general, strains imposed slowly and evenly will not cause problems. During the first six months to a year after panel production, (Fig. 3.5.67), tile expansion is

Fig. 3.5.66(a) & (b)
600 North Michigan Avenue
Chicago, Illinois;
Architect: Beyer Blinder Belle, Design Architect; and Shaw and Associates, Architect of Record.

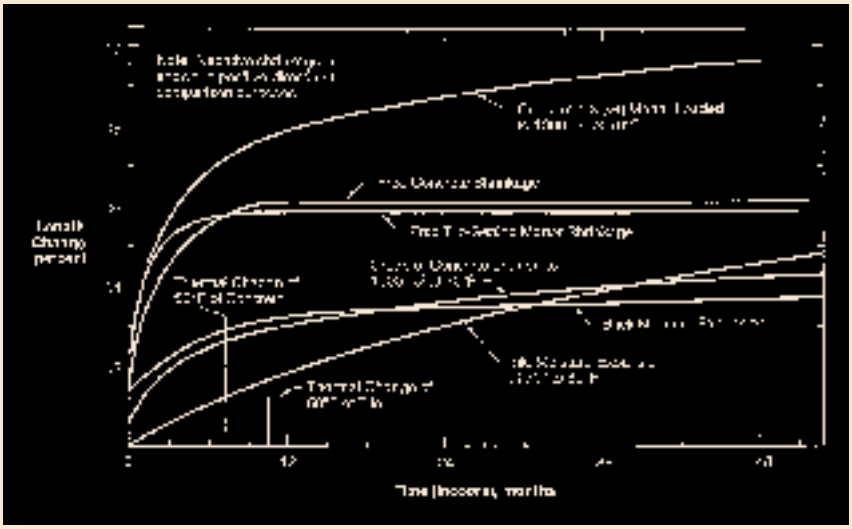

Fig. 3.5.67 Relative temperature and moisture movements of concrete, brick, tile and mortar.

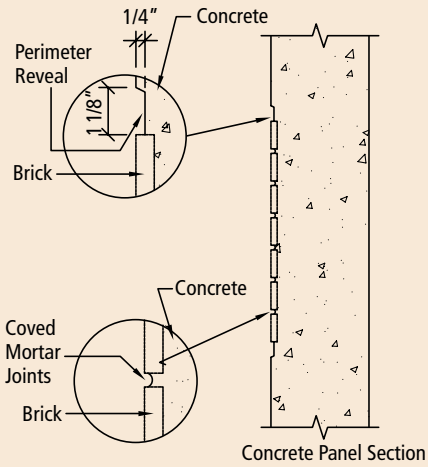

Fig. 3.5.69 Mortar joint and reveal details.

Fig. 3.5.68 Corner details.

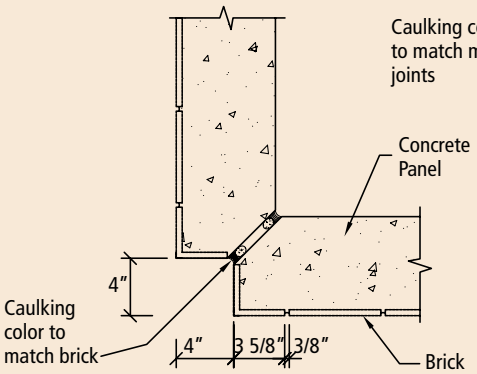

(a) Indented Corner Detail

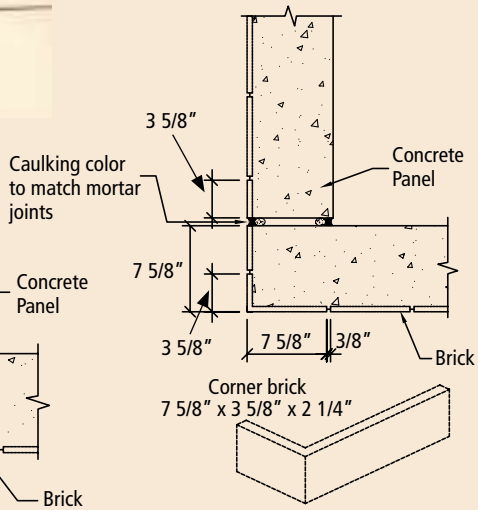

(b) Wrapped Corner Detail

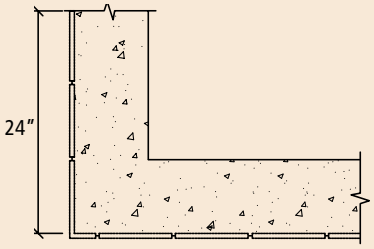

(c) Deep Return

small and the rate of strain application is slow, but concrete shrinkage is nearly complete. The concrete creeps under the load to relieve the tensile stress generated in the tile when the concrete shrinks because the tiles are relatively rigid (elastic modulus of tile/elastic modulus of concrete). After this time period, the tile has many years to accommodate the additional moisture expansion.

Three types of corner details may be used: (1) indented (Fig. 3.5.68[a]); (2) wrapped (Fig. 3.5.68[b]); or (3) deep return (Fig. 3.5.68[c]). Brick mortar joints should be concave (cove). At reveals and at the top and bottom of inset areas, the concrete should cover the edges of the brick units (Fig. 3.5.69). The designer also needs to pay special attention to where the joints between concrete panels are located, which is a departure from the use of traditional brick masonry.

Fig. 3.5.70

In the development of the technical documents, using thin brick precast concrete panels provides a simplification of detailing over hand set masonry. The system avoids intricate flashing, masonry support, and masonry anchoring requirements that would be necessary with conventional construction to achieve layering and relief features.

3.5.10.6 Production and construction considerations

Clay product–faced units have joint widths controlled by locating the units in a suitable template or grid system set out accurately on the mold face (Fig. 3.5.70). Common grid systems generally consist of an elastomeric (or rubber) form liner or a plastic form liner. Liner ridges are typically shaped so that joints between units simulate concave-tooled joints.

Tolerances for brick-faced precast concrete panels are shown in Fig 3.5.71. The number of bricks that could exhibit any misalignments should be limited to 2% of the bricks on the panel.

Tiles, measuring 2 × 2 in. (50 × 50 mm) or 4 × 2 in. (100 × 50 mm), may be supplied face-mounted on polyethylene or paper sheets and secured to the mold by means of double-faced tape or a special adhesive.

Fig. 3.5.71 Tolerances for brick-faced architectural elements.

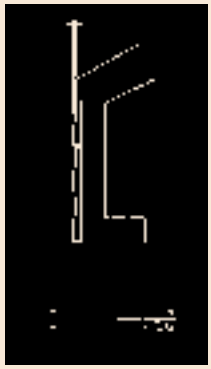

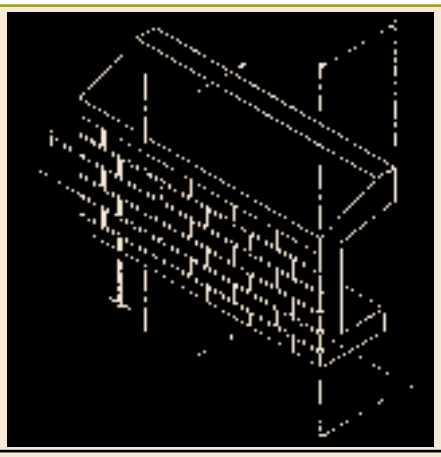

a = Alignment of mortar joints:	
Jog in alignment	1/8 in. (3 mm)
Alignment with panel centerline	±1/8 in. (±3 mm)
b = Variation in width of exposed mortar joints	±1/8 in. (±3 mm)
c = Tipping of individual bricks from the panel plane of exposed brick surface	-1/4 in. (-6 mm), ≤ depth of form liner joint
d = Exposed brick surface parallel to primary control surface of panel	+1/4 in., -1/8 in. (+6 mm, -3 mm)
e = Individual brick step in face from panel plane of exposed brick surface	-1/4 in. (-6 mm), ≤ depth of form liner joint

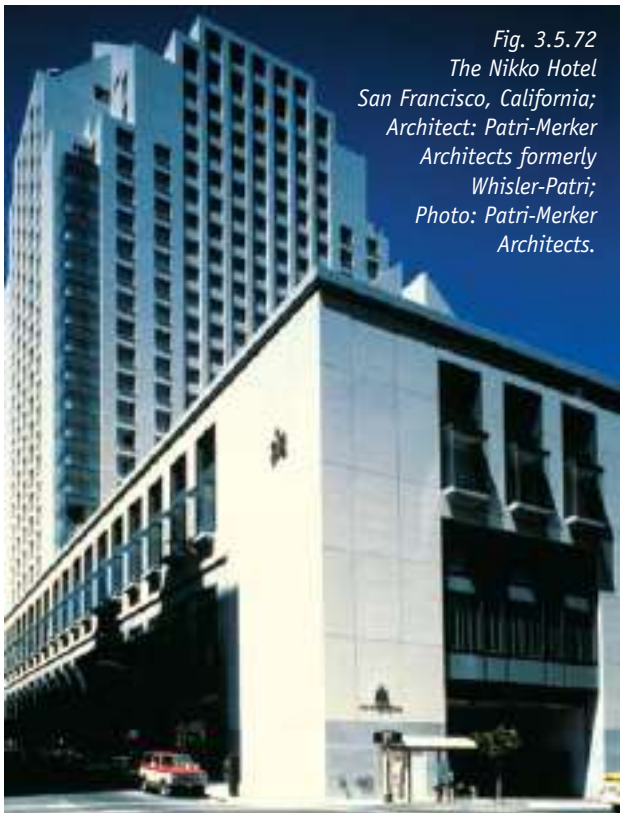

Fig. 3.5.72 The Nikko Hotel San Francisco, California; Architect: Patri-Merker Architects formerly Whisler-Patri; Photo: Patri-Merker Architects.

The space between the tiles is filled with a thin grout and then the backup concrete is placed prior to initial set of the grout. Figure 3.5.72 shows a project that uses 2 × 2 in. (50 × 50 mm) tiles that have been placed with the method described. For the best appearance, narrow tile joints should be filled from the front, particularly if cushion-edged tiles are used.

Fig. 3.5.73 The anchorage of brick to precast concrete using dovetail anchor and slot.

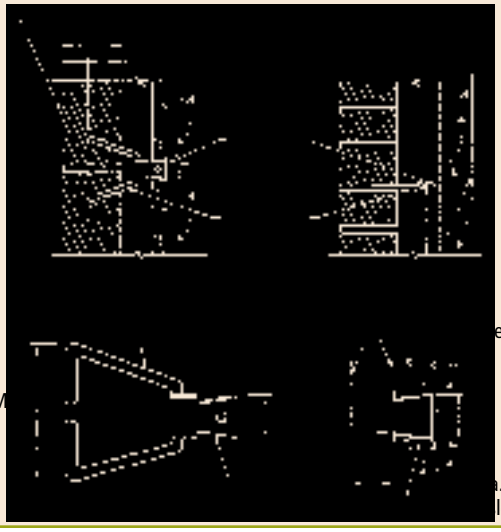

3.5.10.7 Application of clay products after casting of panel

Full brick may be installed on an already-cast precast concrete panel at the plant or at the jobsite. Bricks generally bear on a ledge created by a recess on the precast concrete panel surface or on a shelf angle.

Full brick, supported on concrete ledge or steel shelf angle, requires anchors for lateral support. The anchors should be flexible and capable of resisting tension and compression forces perpendicular to plane of the wall, but permitting slight vertical and horizontal movement parallel to the plane of the wall. This flexibility allows differential movements between the precast concrete and the clay product veneer without cracking or distress.

Galvanized or stainless steel wire anchors (ASTM A 82 or B 227, Grade 30HS) should be at least $^{3}/_{16}$ in. (W 2.8) in diameter and hooked on one end and looped through a $^{7}/_{8}$-in.-wide (22 mm), 12-gage steel sheet bent over the wire (Fig. 3.5.73). The steel sheet is dovetailed on the other end to fit into minimum 22-gage dovetail slot in the concrete panel. The dovetail adjusts vertically so the wire anchor can be placed in the bed joint of the brick.

It has been found that a 16-gage dovetail anchor slot fails at approximately the same load as a 26-gage slot embedded in concrete, so there is not much advantage to using heavier anchor slots to achieve increased load capacity. Instead, more anchors should be used to obtain the required load capacity.

The minimum 3-in.-wide (75 mm) wire anchors should be embedded at least $1^{1}/_{2}$ in. (38 mm), preferably 2 in. (50 mm), into the bed joint of the brick, with a minimum $^{5}/_{8}$ in. (16 mm) cover of mortar between the anchor and the exterior wall face. The size and spacing of anchors are based on tensile and compressive loads induced by wind suction and pressure on the walls.

Most designers use the simple force multiplied by the contributory area to determine anchor loads. When this technique is used, additional anchors should be provided at all openings and discontinuities, such as windows, shelf angles, and concrete ledges, where stresses are known to be higher. They should be spaced not more than 3 ft (0.9 m) apart around the perimeter of an opening and within 12 in. (300 mm) of the opening.

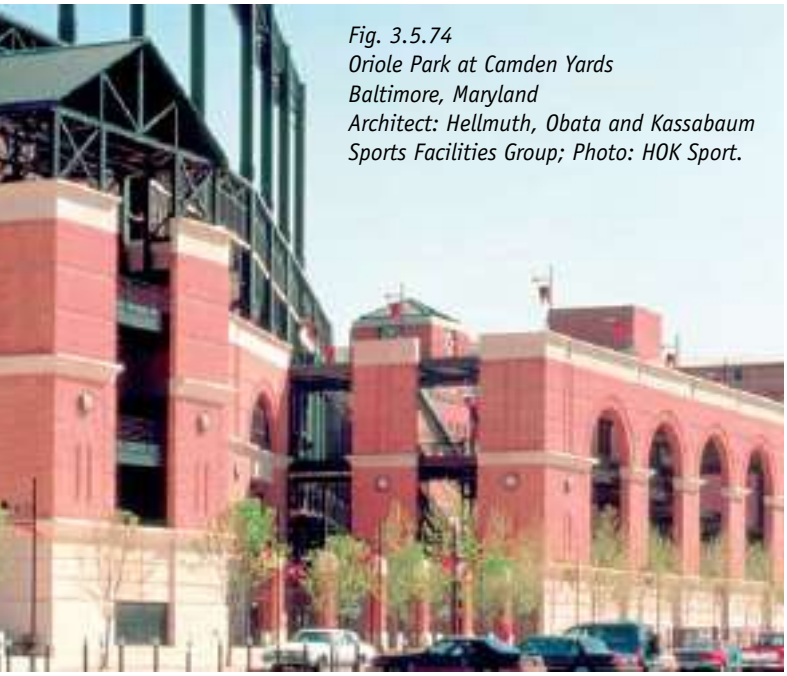

Fig. 3.5.74
Oriole Park at Camden Yards
Baltimore, Maryland
Architect: Hellmuth, Obata and Kassabaum Sports Facilities Group; Photo: HOK Sport.

There should be one anchor per $4^1/_2$ ft^2 (0.42 m^2) of wall area. The maximum spacing between anchors should not exceed 24 in. (600 mm) vertically and 36 in. (910 mm) horizontally. Anchors in alternate courses should be staggered. Applicable building codes should be consulted for additional reinforcement requirements, such as those for resistance to seismic forces acting parallel to panels and for stack bond (which is weaker than running bond).

The published tests on dovetail anchor slots and dovetail anchors indicate an ultimate tension range of 713 to 965 lb (323 to 438 kg) and ultimate compression with a 1 in. (25 mm) cavity of 560 lb (254 kg) for a 12-gage dovetail anchor in a 22-gage dovetail slot (Fig. 3.5.73). A safety factor of 3, based on failure mode, should be applied to arrive at design values.

To avoid anchor buckling, the distance between the inside brick face and the concrete panel should not be greater than 1 in. (25 mm) or less than $^1/_2$ in. (13 mm). This space should be kept free of mortar or other rigid material to permit the differential movement between the concrete panel and brick.

The low-scaled, arched façade in Fig. 3.5.74 presents itself in the form of elaborate cornices and rustication joints. Brick anchored to dovetail slots in the precast concrete was field-laid on concrete ledges via scaffolding following precast concrete erection.

Shelf angles may be used to support the full-brick veneer at each floor, or at least every other floor, in place of a concrete ledge (Fig. 3.5.75). The shelf should be made of structural steel conforming to ASTM A 36 and properly sized and anchored to carry the imposed loads. Anchor bolt holes should be horizontally slotted to allow for ease of construction and horizontal movement. For shelf angles supporting unreinforced masonry, deflection should be limited to *L/600,* but should not exceed 0.3 in. (7.5 mm). A small space should be left between the lengths of angles to allow for horizontal thermal movements.

For severe climates and exposures, consideration should be given to the use of galvanized or stainless steel shelf angles. When using shelf angles, continuous flashing should be installed over the angle. To ensure adequate resistance to corrosion, coatings or materials should conform to ASTM A 123 or ASTM A 167. The suggested minimum level or corrosion protection for coatings of anchor material is either ASTM A 153 Class B-2 or ASTM A 167 Type 304.

Horizontal pressure-relieving joints should be placed immediately beneath each shelf angle. Pressure-relieving joints may be constructed by either leaving an air space or placing a highly compressible material under the shelf angle and sealing the joint with an elastic sealant and backer rod (Fig. 3.5.75).

Flashing in a masonry wall supported on shelf angles is important for the proper drainage of water that may penetrate the masonry. Flashing is not required if the masonry is supported on a concrete ledge that has a slope of $^1/_8$ in. (3 mm) in 5 in. (125 mm), although

Fig. 3.5.75 Shelf angle with flashing and weep holes.

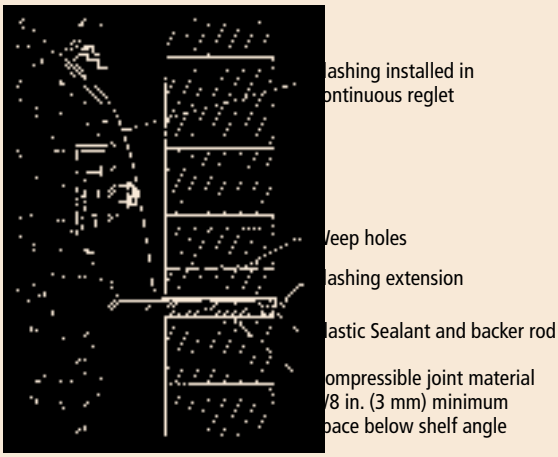

weep holes are necessary. Flashing materials are generally formed from sheet metals, bituminous-coated membranes, plastics, vinyl, or combinations thereof, the selection being largely determined by cost and suitability. The cost of flashing materials varies widely. Only superior-quality materials should be selected, however, since replacement in the event of failure would be exceedingly expensive.

Flashing may be installed in a continuous reglet or recess in the concrete. To be most effective, the flashing should extend ½ in. (13 mm) beyond the wall surface and be turned down at a 45° angle to form a drip. Weep holes, at least ¼ in. (6 mm) in diameter, should be provided in head joints immediately above the flashing or concrete ledge at intervals of 16 to 24 in. (400 to 600 mm) maximum to permit drainage of accumulated water.

If, for aesthetic reasons, it is necessary to conceal the flashing, the number and spacing of weep holes are even more important. In these cases, the spacing should not exceed 16 in. (400 mm) on center. Concealed flashing with tooled mortar joints can retain water in the wall for long periods of time, thus concentrating the moisture at one spot.

3.5.11 Honed or Polished

Grinding of concrete removes the thin layer of cement paste and cuts the aggregates to a uniformly smooth surface. The grinding is called honing or polishing, depending on the degree of smoothness of the finish. The surface can be a dull matte finish (honed) or, with the use of increasingly finer grinding pads, can reach a high luster (polished), depending also on the type of aggregates. Polished, exposed-aggregate concrete finishes compare favorably with polished natural stone façades, yet offer the architect total freedom of design while using the full structural capability of concrete. Honed and polished finishes have gained acceptance because of their appearance and excellent weathering characteristics, making them ideal for high traffic areas and polluted environments. Polished surfaces will also reflect more heat than other finishes. Because of a corrosive and dirt-laden atmosphere, a dense, polished surface texture was used on the building in Fig.3.5.76. Maintenance since 1973 has proven to be minimal for the architectural precast concrete cladding. The panels were made with an exposed-quartz aggregate, silica sand, and buff-tinted white cement. After fabrication and removal from the mold, the panels were ground and polished smooth on all flat surfaces. Figure 3.5.76 shows the excellent details. While these are among the most expensive precast concrete finishes, they usually cost far less than dimension stone. There are only a few North American producers with equipment to produce the polished finish.

In order to produce a good ground or polished finish it is first necessary to produce a good plain finish. The compressive strength of the concrete

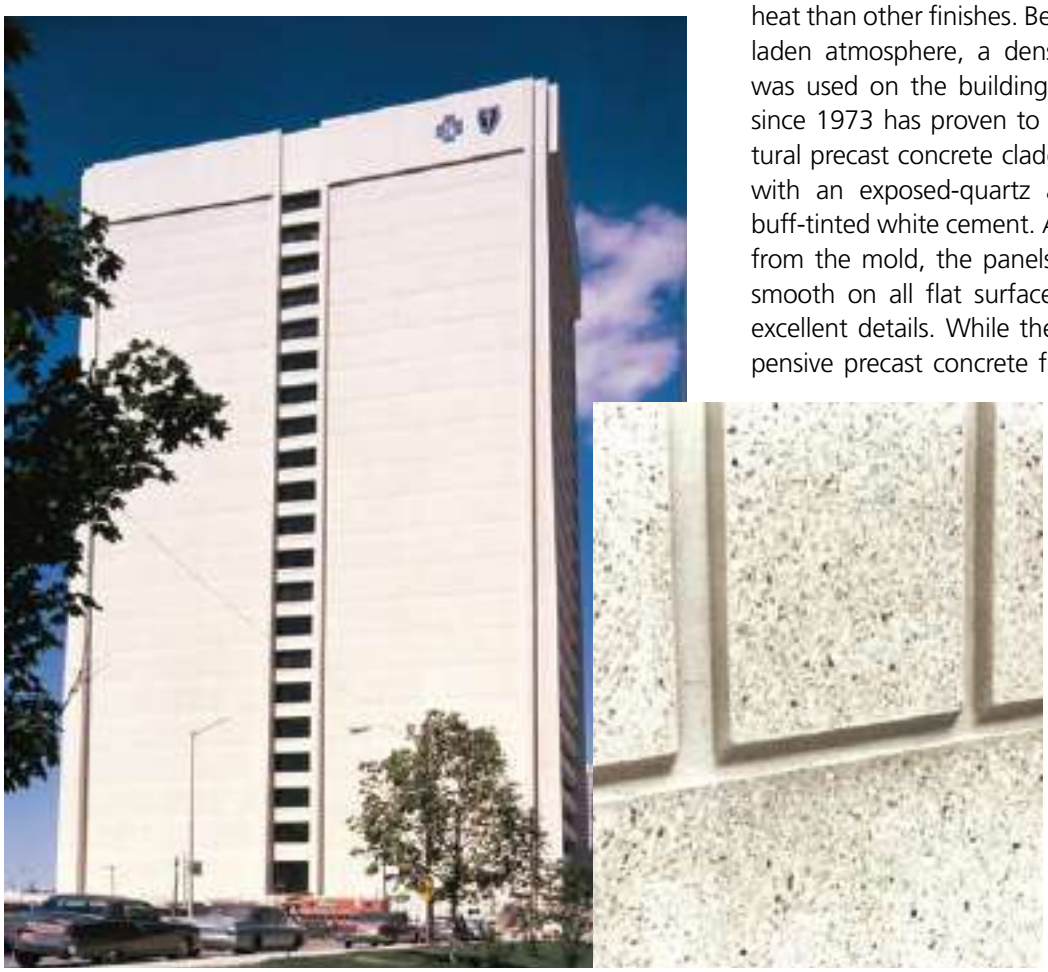

Fig. 3.5.76 Blue Cross/Blue Shield Service, Center; Detroit, Michigan; Architect: Giffels, Inc. formerly Giffels & Rossetti, Inc.; Photos: Daniel Bartushs, Giffels Inc. – Southfield Office.

should be 5000 psi (34.5 MPa) before the start of any honing or polishing operations. All patches and the fill material in any bug/blow holes or other surface blemishes must also be allowed to reach approximately 5000 psi (34.5 MPa). It is preferable that the matrix strength of the concrete mixture approach the compressive strength of the aggregates or the surface may not grind evenly or polish smoothly, producing dull patches and possible dislodgement of aggregate particles.

Because aggregates will polish better than the matrix, it is essential to have a minimum matrix area. Either a continuous or gap-graded concrete mixture carefully designed to provide maximum aggregate density on the surface to be polished is acceptable. In choosing aggregates, special attention should be given to maximum size and hardness. Not all aggregates will accept polish. Softer aggregates such as marble or onyx are much easier to polish than either granite or quartz, although the latter are preferred for their potentially high polish. Limestone and quartzites will not accept a polish while basalt can be honed to produce a smooth but matte finish, but cannot be highly polished. Marble aggregates may not retain their polish over time due to chemical reaction with atmospheric pollutants, such as acid rain. The hardness of the aggregates will affect the rate of wear and tear on the grinding pads, which in turn will affect the cost.

Of major concern to the economic viability of a polished project is the shape and geometry of the units to be polished, the extent of polished finished face, and the degree of hand polishing to edges, arrises, and surface areas inaccessible to automatic machine heads. Careful detailing to maximize use of automatic polishing equipment and minimize hand polishing will ensure minimum cost. For reasons of economy, only surfaces that can be ground completely by machines passing over flat areas on returns should be honed or polished.

To a large degree, the amount of hand polishing is governed by the shape of the panel. Hand polishing of arrises, returns and other architectural features not accessible with automatic equipment is slow and costly and should not be designed, where possible.

Special detailing considerations that need to be noted (Fig. 3.5.77) include:

- Flat surfaces are most easily polished; projections should be avoided as they necessitate costly hand work. Computerized polishing machines will polish across grooves or recesses without difficulty, leaving the surfaces within the grooves unpolished to provide contrast in color and texture. Alternatively, to reveal the color of the aggregates, these grooves can be sandblasted or acid-etched prior to polishing.
- Re-entrant angles should be avoided as they involved expensive hand polishing. When a 90° return of a panel is honed or polished, it may prove beneficial to sequentially cast the return in a horizontal position. This will help create a more dense, uniform surface. However, in the case of an element that is L-shaped, all surfaces external to the re-entrant can be polished.
- Convex surfaces with a radius of 10 ft (3 m) or more can be polished by computerized polishing machinery but concave surfaces are unsuitable. Also, vertical and oblique planes ±45° to horizontal are capable of being polished without adjustment to the element being polished. Columns of circular cross-section ranging between 8 to 50 in. (200 to 1200 mm) in diameter can be polished.
- Square, sharp edges should be avoided as they are prone to chipping during polishing and damage during handling. Miter joints should have a quirk on the exterior corner.
- To reduce the risk of damage, both while polishing and handling, rather than create a right angle at the corner of a panel, an edge can be beveled to produce a slightly obtuse angle.
- Alternately, the edge can be chamfered either by $^3/_8$ to $^1/_2$ in. (10 to 13 mm). Chamfers may be expensive to polish and should be left untreated if they cannot be seen closely, or they may be sandblasted prior to polishing.
- On panels incorporating more than one surface finish, the surface to be polished should be higher than the other surfaces or separated by a wide groove.

The grinding process, which can be either wet or dry, removes approximately $^1/_8$ in. (3 mm) off the form face of the precast concrete panels. Wet grinding is preferred, because the paste that is created aids in the grinding. A high standard of craftsmanship is mandatory for this treatment, as the removal of the cement skin emphasizes any defects in either formwork or compaction. It is very important to avoid any segregation in the concrete. As with other finishes, final appearance and uniformity will benefit if it is possible to match or complement matrix color with aggregate color.

Fig. 3.5.77 Detailing considerations.

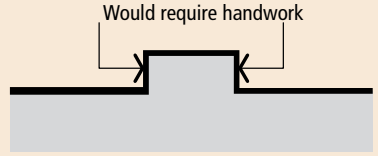

- Requires hand work if returns are to be polished.

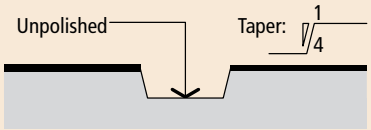

- Suitable – groove not polished. Groove may be left as cast, acid etched, or sandblasted.
- Note need for taper or 'draft' to allow stripping from mold.
- Need for groove of adequate size, capable of being 'read' at a distance.
- Consider depth of groove in relation to cover to reinforcement.

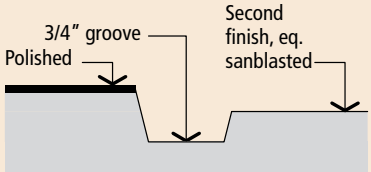

- When more than one finish is required, the surface to be polished should be 'proud' of other surfaces.

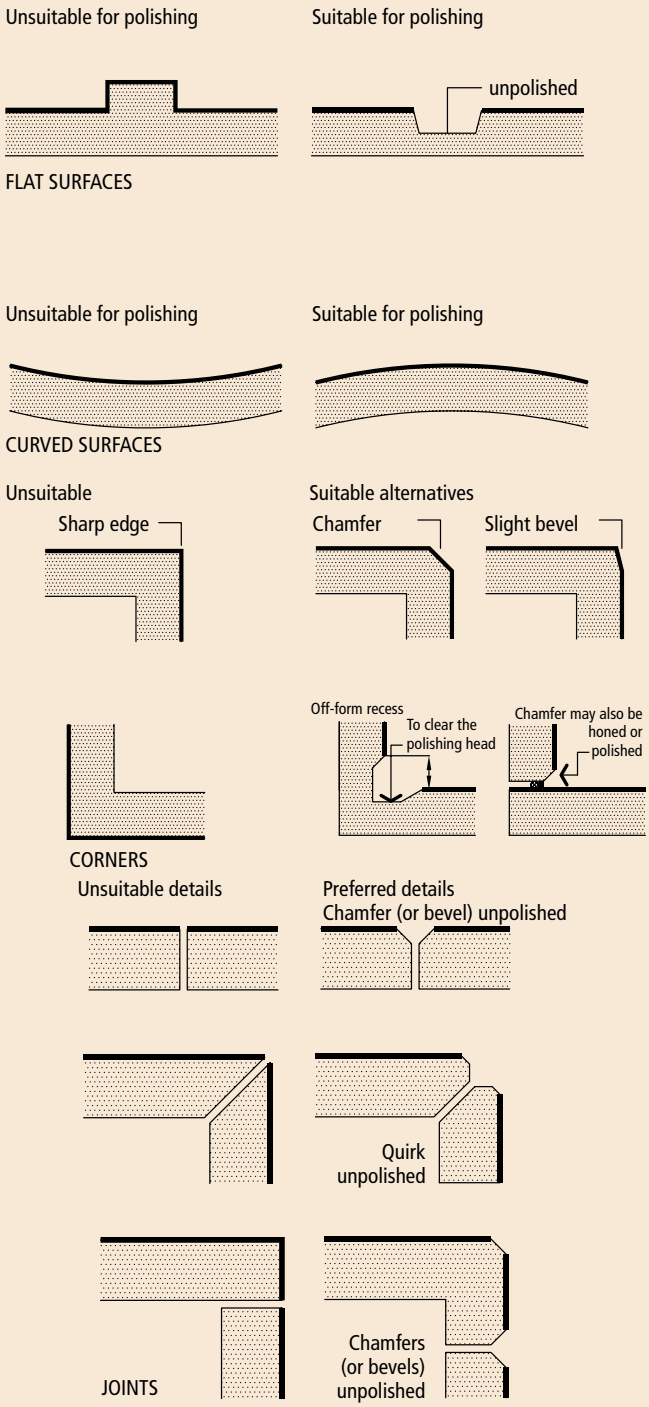

Continued mechanical abrasion with progressively finer grit, followed by filling of surface air voids and rubbing, will produce a highly polished surface. The depth of grinding determines the extent to which the aggregate shows, but the color of the cement will be important in any case. Such panels have an attractive sheen that enhances many colors. Polished panels of pastel colors tend to appear white when viewed from a distance because of their high surface reflectance. Therefore, this type of surface is recommended for panels situated relatively close to the pedestrian traffic flow or for those of medium or dark shades.

As is typical of a department store anchoring a subur-

Fig. 3.5.78
Macy's Department Store (Mall of America),Bloomington, Minnesota; Architect: Slomanson, Smith & Barresi Architects; Photo: Slomanson, Smith & Barresi Architects.

ban shopping mall, the broad expanse of the exterior walls are windowless. The designer used surface texture, the play of light and shade on receding wall planes, strong entrance elements embracing the compelling forms of the arch and the loggia in order to achieve a vibrant architectural composition (Fig. 3.5.78). The 18-ft-high (5.5 m) panels from the first to second levels combine two distinct color mixtures and two surface finishes. The darker polished surfaces of quartzite and granite aggregates were used to accent the plinth and the 4 ft (1.2 m) band courses, the entrances, central arches, and loggias as a facing to frame the entrance porticos. The lighter surfaces of quartzite aggregates was given an acid-etch finish.

The panels on the embassy in Fig. 3.5.79(a) have two different finishes using the same face mixture: a very shiny, highly polished darker surface and a bush-hammered, rougher, lighter surface. They form horizontal bands throughout the façades of the 13-story Chancellery building and 9-story public building (Fig. 3.5.79 [b]). The darker polished surfaces simulate a Mexican natural granite.

Fig. 3.5.79 (a) & (b)
French Embassy, Mexico, D.F., Mexico; Architect: Bernard Kohn Associates; and Eduardo Terrazas y Asociados (joint venture); Photos: Bernard Kohn Associates.

Above the base of the building in Fig. 3.5.80(a), the granite used at the base was matched with a concrete mixture with local, crushed-granite aggregate by honing the double window precast concrete panels. The look of rusticated granite in a running bond pattern was developed by 1 × 1 in. (25 × 25 mm) reveals that were lightly sandblasted before the panel was honed (Fig. 3.5.80[b]).

A combination of acid etching of the matrix area with polishing of the aggregate produces a surface characterized by flat, coarse aggregate that is slightly proud of the underlying matrix. This surface is highly resistant to weathering and is self-cleaning. A polished/sandblasted finish provides a contrast between the polished aggregate and the sandblasted matrix of the concrete.

The use of combination finishes requires the designer to make an early decision to ensure that the overall concept makes allowance for the change in color and texture of the two finishes and that a suitable demarcation is detailed to separate them—usually a V-groove. The exact shape of this V-groove will require consultation with and trials by the precaster to ensure that the angle within the V-groove is sufficiently flat to prevent chipping the edge in the grinding process and causing an unsightly line on one side of the groove.

The designer will also need to consider that the polishing process will create a step in the surface between the polished and the acid-etched or sandblasted finish of approximately $^1/_8$ in. (3 mm), which can cause problems when aligning precast concrete units on site. This can be overcome during the design process. Casting a series of trial panels is strongly recommended to provide full knowledge of the combined effects.

Fig. 3.5.80(a) & (b)
BC Hydro Office Building
Vancouver, B.C., Canada;
Architect: Musson Cattell Mackey Partnership;
Photos: Simon Scott.

3.5.12 Stone Veneer–Faced Precast Concrete

Natural stone veneer–faced precast concrete has become widely used in building construction because of its strength, durability, aesthetic effect, availability, and inherent low-maintenance costs. The incorporation of the stone veneer into the precast concrete panels provides an economically viable solution to cladding today's structures.

Stone veneer–faced precast concrete panels offer many benefits. These include:

1. Veneer stock can be used in thinner sections because anchoring points may be placed closer together.
2. Multiplane units such as column covers, spandrels with integral soffit and sill sections, deep reveal window frames, inside and outside corners, projections and setbacks, and parapet sections are more economically assembled as veneer units on precast concrete panels. Often, it is desirable to use one of the veneer materials in a traditional manner around the lower portion of a building and extend a similar finish with veneered precast concrete panels up the exterior walls.
3. Precast concrete systems permit faster enclosure, allowing earlier work by other trades and subsequent earlier occupancy, because each of the larger panels incorporates a number of veneer pieces.
4. Veneered precast concrete panels can be used to span column-to-column and floor-to-floor, thereby reducing floor-edge loading and eliminating elaborate temporary scaffolding.

3.5.12.1 General considerations

The purchaser of the stone should appoint a qualified individual to be responsible for coordination, which includes delivery and scheduling responsibility and ensuring color uniformity. Color control or blending for uniformity should take place at the stone fabricator's plant, because ranges of color and shade, finishes, and markings such as veining, seams, and inclusions are easily seen during the finishing stages. Acceptable stone color should be judged for an entire building elevation rather than as individual panels. The responsibility for stone coordination should be written into the specifications so it can be priced. The owner, architect, and/or stone purchaser should visit the stone fabricator's plant to view the stone veneer and establish criteria and methods for color-range blending on the project.

All testing to determine the physical properties of the stone veneer-with the same thickness and finish that will be used on the structure-should be conducted by the owner prior to the award of the precast concrete contract. This test data will determine the stone design and anchor placement.

There is a need for close coordination between the precast concrete manufacturer and stone veneer supplier. Shop drawing preparation and submissions may vary from procedures established for non-veneered precast concrete panels. Checking and approval of these details and shop drawings will be simplified and expedited if they can be combined and/or submitted simultaneously. Because of schedule issues, separate subcontracts and advance awards often occur in projects with stone-veneered panels. While these procedures may affect normal submission routines, it is not intended that responsibilities for accuracy should be transferred or reassigned. Typically, the precaster is responsible for precast concrete and stone layouts and details, while the stone-veneer fabricator is responsible for stone shop-fabrication drawings and drilling of anchor holes.

The production of stone veneer panels requires adequate lead time in order to avoid construction delays. Therefore, it is important that approvals for shop drawings are obtained expeditiously. Furthermore, it is recommended that the designer allow the submission of shop drawings in predetermined stages so production can begin as soon as possible and ensure there is a steady and timely flow of approved information to allow uninterrupted fabrication.

The precast concrete producer must provide the stone quantity and sequence requirements to meet the panel fabrication schedule. For reasons of production efficiency, some concrete panels may be produced out of sequence relative to the erection sequence. The precaster and stone fabricator should coordinate packaging requirements to minimize handling and breakage. Extra stone (approximately 2 to 5%) should be supplied to the precaster to allow immediate replacement of damaged stone pieces. The extra stone should be the largest pieces to be used on the project. Deliveries should be scheduled to accommodate actual panel fabrication schedules.

3.5.12.2 Stone properties

Stone is a product of geologic evolution and, therefore, does not demonstrate the consistent behavior that may apply to manufactured building materials, such as concrete. The strength of natural stone depends on several factors: the size, rift, and cleavage of crystals; the degree of cohesion; the interlocking geometry of crystals; the nature of natural cementing materials present; and the type of crystal. The stone's properties will also vary with the locality from which it is quarried. Therefore, it is important that current testing is performed on stone quarried for each specific project.

Sedimentary and metamorphic rocks, such as limestone and marble, will exhibit different strengths when measured parallel and perpendicular to their original bedding planes (anisotropic). Igneous rocks, such as granite, may or may not exhibit relatively uniform strength characteristics in their various planes (isotropic). In addition, the surface finish, freezing and thawing, and large temperature fluctuations will affect the stone strength and in turn influence the anchorage system required for the stone to the precast concrete.

Information on the durability of the specified stone should be obtained through current testing in conjunction with observations of existing installations of that particular stone. This information should include such factors as tendency to warp, reaction to weathering forces, resistance to chemical pollutants, resistance to chemical reaction from adjacent materials, and reduction in strength from the effects of weathering or wetting and drying.

Tests should be performed by the stone fabricator to determine the physical properties of the stone being considered prior to awarding the precast concrete contract. The testing should be done on stone with the same finish and thickness that will be used on the structure. Flexural tests (ASTM C 880) should be used to evaluate the physical properties and obtain design values. Absorption testing (ASTM C 97) helps evaluate freezing and thawing durability. These properties, along with the performance of the anchors attaching the stone veneer, should be used to ensure adequate strength of the panel to resist loads during handling, transportation, erection, and in-service conditions.

The process used to obtain a thermal or flame finish on granite veneers reduces the effective stone thickness by about $^1/_8$ in. (3 mm), as well as the physical strength to a measurable degree. Bushhammered and other similar surface finishes also reduce the effective thickness and strength. For $1^1/_4$ in. thick (3 cm) veneers, a reduction in thickness of $^1/_8$ in. (3 mm) reduces the theoretical bending strength by about 20% and increases the elastic deflection under wind loads by about 37%.

Laboratory tests on $1^1/_4$ in. (3 cm) -thick specimens of unaged, thermally finished granite revealed that the effects of the thermal finish reduced the bending strength of the specimens by as much as 25 to 30%. The loss of strength depends mainly on the physical properties of the stone forming minerals, on the coherence of the crystalline structure of the stone, and on the presence of micro and macrofractures in the stone.

Thermal or flame finishing, and to a certain degree bushhammering, of granite surfaces causes microfracturing, particularly of quartz and feldspars. These microcracks permit absorption of water to a depth of about $^1/_4$ in. (6 mm) in the distressed surface region of the stone, which can result in degradation by cyclic freezing and thawing and a further reduction in bending strength.

Weathering affects different stones in different ways. It can cause both a chemical decomposition and physical disintegration in some stones. The thinner the stone is sliced, the more susceptible it may be to weathering. Most natural stones lose strength as a result of aging (thermal cycling, for example, heating to 170 °F [77 °C] and cooling to -10 °F [-23 °C], and wet/dry cycling). The modulus of rupture of building stone can also be affected by freezing and thawing of the stone.

Flexural tests (ASTM C 880) should be conducted on the selected stone, at the thickness and surface finish to be used, in both the new condition and the condition after 100 cycles of laboratory-accelerated aging (weathering) tests to determine the reduction in strength, if any. Suggested weathering test procedures include cycling between 170 °F (77 °C) and -10 °F (-23 °C), while the face of the stone is submerged in a 4 pH sulfurous acid solution that simulates chemical weathering. For warm climates, the test procedure can be modified to cycle between 40 °F (5 °C) and 170 °F (77 °C). Also, in areas where the pH of rainfall is above 6, the acid solution can be eliminated. Absorption testing (ASTM C 97), as mentioned, helps evaluate the freezing and thawing durability of the stone.

Stones that have a satisfactory performance record in thicknesses, sizes, and climates similar to those envisioned for a project may, at the option of the designer,

be exempt from the above testing requirements.

For most types of stone, temperature-induced movements are theoretically reversible. However, certain stones, particularly marble, when subjected to a large number of thermal cycles, develop an irreversible expansion in the material amounting to as much as 20% of the total original thermal expansion. This residual growth is caused by breaking of crystal bonds. Such growth, if not considered in the stone size, may result in curling or bowing of thin marble. For relatively thick marble veneers, the expansion effects are restrained or accommodated by the unaffected portion of the veneer. Tests should be performed to establish the minimum thickness required to obtain satisfactory serviceability. Stone can be exposed to differential accelerated heating and cooling cycles and measured for deformation (bowing/hysteresis).

Table 3.5.2 Permeability of commercial building stones, cu in./ft²/hr for ½ in. thickness.

Stone Type	Water Pressure, psi		
	1.2	50	100
Granite	0.06–0.08	0.11	0.28
Limestone	0.36–2.24	4.2–44.8	0.9–109
Marble	0.06–0.35	1.3–16.8	0.9–28.0
Sandstone	4.2–174.0	51.2	221
Slate	0.006–0.008	0.08–0.11	0.11

Note: 1 cu in./ ft²/hr/½ in. = 16.39 m³/hr/13 mm; 1 psi = 0.006895 MPa; 1 in. = 25.4 mm.

Volume changes due to moisture fluctuations should be considered in design, especially for joint size. Moisture permeability of stone veneers is generally not a problem (Table 3.5.2). However, as stone veneers become thinner, water may penetrate in greater amounts and at faster rates than normally expected, and damp appearing areas of moisture on the exterior surface of thin stone veneers will frequently occur. These damp areas result when the rate of evaporation of water from the stone surface is slower than the rate at which the water moves to the surface.

3.5.12.3 Stone sizes

Stone veneers used for precast concrete facing are usually thinner than those used for conventionally set stone, with the maximum size generally determined by the stone strength. Table 3.5.3 summarizes typical dimensions. Veneers thinner than those listed can result in anchors being reflected on the exposed surface, excessive breakage, or permeability problems.

The length and width of veneer materials should be sized to a tolerance of ±$^{1}/_{16}$ in. (±2 mm). This tolerance becomes important when trying to line up the false joints on one panel with those on the panel above or below, particularly when there are a large number of pieces of stone on each panel. Tolerance allowance for out-of-square is ±$^{1}/_{16}$ in. (±2 mm) difference in length of the two diagonal measurements.

Flatness tolerances for finished surfaces depend on the type of stone and finish. For example, the granite industry's flatness tolerances vary from $^{3}/_{64}$ in. (1 mm) for a polished surface to $^{3}/_{16}$ in. (5 mm) for flame (thermal) finish when measured with a 4 ft (1.2 m) straightedge. Tolerances should be clearly specified in the contract documents. Thickness variations are less important, because concrete will provide a uniform back face except at corner butt joints. In such cases, the finished edges should be within ±$^{1}/_{16}$ in. (±2 mm) of the specified thickness. However, large thickness variations may lead to the stone being encased with concrete and thus restrict the relative movement of the materials.

Table 3.5.3 Dimensional parameters of various stone materials.

Stone Type	Recommended thickness, In. (cm)	Length range, ft (m)	Width range, ft (m)	Maximum area, sq ft (m²)
Marble	1.25 (3)	3-5 (0.9-1.5)	2-5 (0.6-1.5)	20 (1.9)
Travertine*	1.25 (3)	2-5 (0.6-1.5)	1-4 (0.3-1.2)	16 (1.5)
Granite	1.25 (3)	3-7 (0.9-2.1)	1-5 (0.3-1.5)	30 (2.8)
Indiana limestone	2 (5)	4-5 (1.2-1.5)	2-4 (0.6-1.2)	15 (1.4)

** Surface voids filled front and back.*

3.5.12.4 Design considerations

Structural design, fabrication, handling, and erection considerations for veneered precast concrete units are similar to those for other precast concrete wall panels, except that special consideration must be given to the veneer material and its attachment to the concrete. The physical properties of the stone facing material must be compared with the properties of the concrete backup.

These properties include:

1. Tensile (axial and flexural), compressive, and shear strength
2. Modulus of elasticity (axial tension, flexure, and axial compression)
3. Coefficient of thermal expansion (Table 3.5.4)
4. Volume change

Because of the difference in material properties between natural stone and concrete, veneered panels are more susceptible to bowing than homogeneous concrete units. Also, the flat surfaces of cut stone reveal bowing more prominently than homogeneous concrete panels. However, there are a number of design and production procedures to help minimize bowing. For example, after the panels are erected, midpoint tie-back connections can take out some bowing.

Table 3.5.4 Coefficients of linear thermal expansion of aggregate and concrete.

Type of Rock (Aggregate)	Average Coefficient of Thermal Expansion × 10^{-6}/in./°F	
	Aggregate	Concrete*
Quartzite, cherts	6.1–7.0	6.6–7.1
Sandstones	5.6–6.7	5.6–6.5
Quartz sands and gravels	5.5–7.1	6.0–8.7
Granites and gneisses	3.2–5.3	3.8–5.3
Syenites, diorites, and andesite, gabbros, diabase, and basalt	3.0–4.5	4.4–5.3
Limestones	2.0–3.6	3.4–5.1
Marbles	2.2–3.9	2.3
Dolomites	3.9–5.5	—
Expanded shale, clay and slate	—	3.6–4.3
Expanded slag	—	3.9–6.2
Blast-furnace slag	—	5.1–5.9

* *Coefficients for concretes made with aggregates from different sources vary from these values, especially those for gravels, granites, and limestones. Fine aggregates generally are the same material as coarse aggregates.*

3.5.12.5 Anchorage of stone facing

The architect, engineer of record, and stone fabricator should conduct tests to determine anchor type and spacing. This will allow the architect to provide anchor spacing prior to bid so that common information can be supplied to all bidders (refer to ASTM C 1242). The stone fabricator should drill the anchor holes in the stone according to architectural specifications. Contract documents should clearly define type, number, and location of anchors, and who supplies the anchors.

A bondbreaker should be used between the stone veneer and concrete backup in order to minimize bowing, cracking, and staining of the veneer. Connections of natural stone to the concrete should be made with flexible mechanical anchors that can accommodate some relative in-plane movement.

Two methods may be used to prevent bond between the veneer and concrete to allow for independent movement:

1. A 6 to 10 mil polyethylene sheet.
2. A closed cell $^1/_8$ to $^1/_4$ in. (3 to 6 mm) polyethylene foam pad. During shipment, consideration must be given to preventing cracking of the stone due to compressibility of the pad.

Preformed anchors, with a $^5/_{32}$ in. (4 mm) minimum diameter, fabricated from Type 304 stainless steel, are supplied by the stone fabricator or, in some cases, by the precaster depending on the contract document requirements. The number and location of anchors should be predetermined by a minimum of five shear and tension tests conducted on a single anchor embedded in a stone/precast concrete test sample using ASTM E 488 or ASTM C 1354 and the anticipated applied loads, both normal and transverse to the panel. Loads anticipated during handling and shipping should be included. Anchor size and spacing in veneers of questionable strengths or with natural planes of weakness may require special analysis.

The number and location of anchor and size of the stone should be based on specific test values for the

actual stone to be installed. Test samples for anchor tests should be a typical panel section of about 1 ft^2 (0.09 m^2) and approximate as closely as possible actual panel anchoring conditions. A bondbreaker should be placed between stone and concrete during sample manufacture to eliminate any bond between veneer and concrete surface. Each test sample should contain one anchor connecting stone to concrete backup and a minimum of five tests are needed to determine tensile (pull-out) and shear strength of each type of anchor. Depending on the size of the project, it may be desirable to perform shear and tensile tests of the anchors at intervals during the fabrication period.

Four anchors are usually used per stone piece, with a minimum of two recommended. The number of anchors has varied from one per 1$^1/_2$ ft^2 (0.14 m^2) of stone to 1 per 6 ft^2 (0.56 m^2) with one per 2 to 3 ft^2 (0.19 to 0.28 m^2) the most common spacing. Anchors should be 6 to 12 in. (150 to 300 mm) from an edge with not more than 24 to 30 in. (600 to 750 mm) between anchors depending on the local building code. The shear capacity of the spring clip (hairpin) anchors perpendicular to the anchor legs is greater than when they are parallel (Table 3.5.5) and capacity depends on the strength of the stone. A typical marble veneer anchor detail with a toe-in spring clip anchor is shown in Fig. 3.5.81, while a typical granite veneer anchor detail is shown in Fig. 3.5.82. The toe-out anchor in granite may have as much as 50% more tensile capacity than a toe-in anchor, depending on the stone strength.

Depth of anchor holes should be approximately half the thickness of the veneer (minimum depth of $^3/_4$ in. [19 mm]). Minimum stone cover over the drilled hole should be $^3/_8$ in. (9 mm) to avoid spalling during drilling and spotting from absorbed moisture. The holes should be drilled at an angle of 30 to 45° to the plane of the stone. Holes, approximately 50% oversize, have been used to allow for differential movement between the stone and the concrete. However, holes $^1/_{16}$ in. (2 mm) larger than the anchor are common, as excessive looseness reduces holding power. Anchor

Fig. 3.5.81 Typical anchor for marble veneer.

Note: t = thickness of veneer; d_b = diameter of anchor

Fig. 3.5.82 Typical anchor for granite veneer.

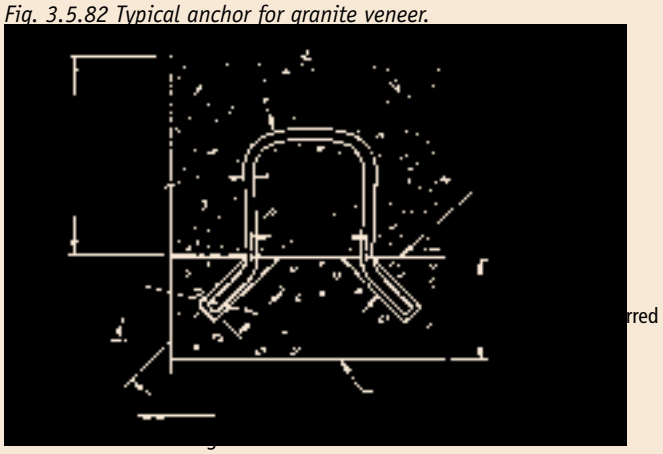

Table 3.5.5 Ultimate shear capacity of spring clip (hairpin) anchors in granite from various sources.*

Stone	Shear parallel to anchor, lb (kg)	Shear perpendicular to anchor, lb (kg) 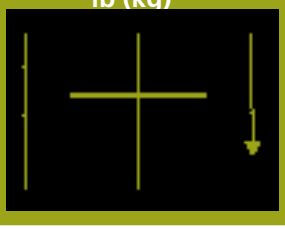
1	2400 to 2650 (1090 to 1200)	3200 to 3500 (1450 to 1590)
2	1800 (815)	2500 (1135)
3	1500 (680)	1500 (680)
4	2500 (1135)	3400 (1540)
5	2800 (1270)	4000 (1815)
6	3400 (1540)	4200 (1905)
7	1000 (455)	1660 (725)

**Need to apply safety factor.*

Fig. 3.5.83 Typical cross anchor dowels for stone veneer.

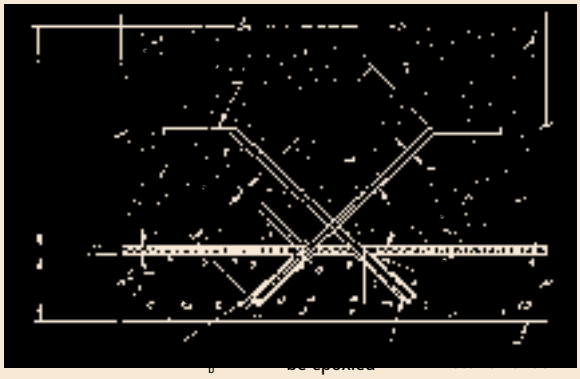

Note: t = thickness of veneer; d_b = diameter of anchor

holes should be within ±$^3/_{16}$ in. (±5 mm) of the specified hole spacing, particularly for the spring clip anchors.

Stainless steel dowels, smooth or threaded, may be installed to a depth of $^2/_3$ of the stone thickness, with a maximum depth of 2 in. (50 mm) at 45 to 60° angles to the plane of the stone. The minimum embedment in the concrete backup to develop the required bond length is shown in Fig. 3.5.83. Dowel size varies from $^3/_{16}$ to $^5/_8$ in. (5 to 16 mm) for most stones, except that it varies from $^1/_4$ to $^5/_8$ in. (6 to 16 mm) for soft limestone and sandstone; it depends on the thickness and strength of the stone.

Fig. 3.5.84 Typical anchors for limestone veneer.

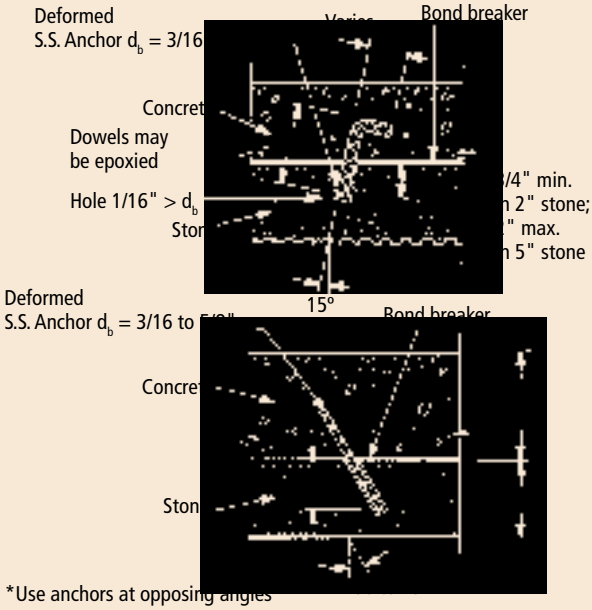

Limestone also has been used traditionally with a thickness of 3 in. (75 mm), but it is now being used as thin as 1$^3/_4$ in. (44 mm), although one limestone group recommends a minimum of 2 in. (50 mm). With limestone, use a bondbreaker, along with mechanical anchors. Dowels and spring clip anchors can be used to anchor limestone. Typical dowel details for limestone veneers are shown in Fig. 3.5.84; the dowels should be inserted at opposing angles to secure stone facing to backup concrete.

Some flexibility should be introduced with all anchors by minimizing the anchor's diameter to allow for the inevitable relative movements that occur with temperature variations and concrete shrinkage. Unaccommodated relative movements can result in excessive stress problems and eventual failure at an anchor location. Consideration may be given to accelerated cyclic temperature tests on the stone-concrete assembly to determine the affect of strength loss on the shear and tensile strengths of the anchors.

In some climates two-part polyester or epoxy is placed in the anchor holes in order to eliminate moisture condensation in the holes and the possible dark, damp appearance of moisture on the exposed stone surface. The polyester or epoxy increases the shear capacity and rigidity of the anchors. The rigidity may be partially overcome by using $^1/_2$ in. long (13 mm) compressible (60 durometer) rubber or elastomeric grommets or sleeves on the anchor at the back surface of the stone (Fig. 3.5.85).

Fig. 3.5.85 Example of a compressible sleeve used to reduce stone anchor rigidity when the anchors are epoxied in the stone.

Differential thermal expansion of the stone and unfilled epoxy (without sand) may cause cracking of the stone veneer. Epoxies yield under stress and, if properly formulated, will accommodate relatively large dimensional changes resulting from thermal effects. The coefficient of expansion of the stone and epoxy should closely match. However, this may be overcome by keeping the oversizing of the hole to a minimum, thereby reducing epoxy volume and using stone flour or fines, or fine sand as a filler for the epoxy to reduce the coefficient of thermal expansion of the epoxy and the shrinkage (Fig. 3.5.86).

It may be more desirable to fill the anchor hole with a low modulus polyurethane sealant. The overall effect of either polyester, epoxy, or sealant materials on the behavior of the entire veneer should be evaluated prior to their use. At best, the long-term service life of adhesive-embedded anchors is questionable, so any increase in pull-out strength of the anchors should not be used in calculating long-term anchor capacity. When using polyester or epoxy in anchor holes, the precaster needs to follow the manufacturer's recommendations as to mixing and curing temperature limitations.

The stone trade associations and the suppliers of the various kinds of building stones recommend safety factors. Due to the variation in the physical properties of natural stones and to account for the risks of brittle failure and the effects of weathering, there are more recommended safety factors than those used for manufactured building materials, such as steel and concrete. The minimum recommended safety factor, based on the average of the test results, is 4 for anchorage components in stone. If the range of test values exceeds the average by more than ±20%, then the safety factor should be applied to the lower bound value (see the Appendix to ASTM C 1242 for a discussion on safety factors).

3.5.12.6 Panel watertightness

The bondbreaker between the stone veneer and concrete backup may function as a vapor barrier on the concrete's exterior face, keeping moisture in the veneer or at the interface unless drainage provisions are provided. After some period of time, gaps also may develop between the stone veneer and concrete backup at the bondbreaker. These gaps could allow moisture penetration due to capillary action and gravity, particularly where the window or roof design allows water to flow over the top of the panel. One solution to overcome this problem is a two-stage joint. This approach provides an airtight 1 in. (25 mm) wide urethane seal, bonded to the stone veneer and concrete backup, and continuous along both sides and top of the panel. Other designers have used a sealant applied to the top and side edges of the stone/concrete interface after the panels are cast. Care must be taken to ensure that the sealant used is compatible with the sealant to be applied to panel joints after erection of the panels. The bondbreaker should not be sealed at the bottom of the panel. This ensures any moisture that penetrates behind the stone veneer can drain freely.

Fig. 3.5.86 Effect of changes in the sand aggregate binder ratio on the thermal coefficient of an epoxy.

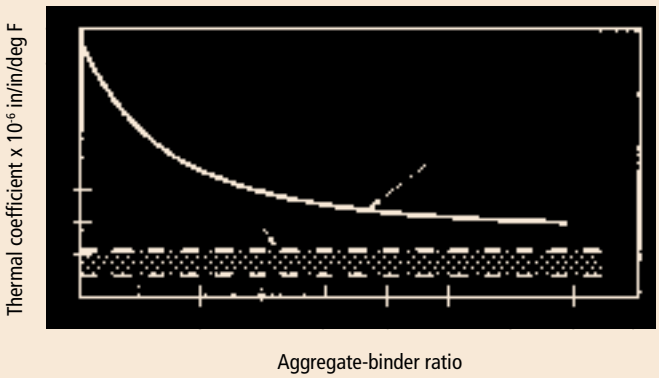

3.5.12.7 Veneer jointing

In the form, the stone veneer pieces are temporarily spaced with a non-staining, compressible spacing material, such as rubber, neoprene, or soft plastic wedges, or a chemically neutral, resilient, non-removable gasket, such as sealant backer rod, which will not stain the veneer or adversely affect the sealant to be applied later. Shore A hardness of the gasket should be less than 20.

The gaskets should be of an adequate size and configuration to provide a recess to receive the sealant and also prevent any of the concrete backup from entering the joints between the veneer units. Non-acidic based masking or duct tape (other types will stain stone) may also be used to keep concrete out of the stone joints so as to avoid limiting stone movement. Spacer material should be removed after the panel has been removed from the mold unless it is a resilient sealant backup.

Joints between veneer pieces on a precast concrete element are typically a minimum of $^3/_8$ in. (10 mm), although they have often been specified equal to the joint width between precast concrete elements. Because actual joint width between precast concrete panels (as erected) depends largely on the accuracy of the main supporting structure, it is not realistic to require matching joint widths between stone pieces and between panels.

The use of an invisible joint (for example, less than $^3/_8$ in. [10 mm]) is not recommended because the joint must have the width necessary for sealant design to allow for movements, tolerances, and other dimensional or volumetric changes. Also, due to tolerances and natural warping, adjacent panels may not be completely flush at the joint, and shadow lines will appear. Rather than attempting to hide the joint, the joint should be emphasized by finding an aesthetically pleasing joint pattern with a complementary joint size.

When stone veneer is used as an accent or feature strip on precast concrete panels, a $^1/_2$ in. (13 mm) space is left between the edge of the stone and the precast concrete to allow for differential movements of the materials. This space is then caulked as if it were a conventional joint.

The sealant between stones or panels should be an elastomeric, usually urethane, polysulfide, or silicone, which will not stain the stone-veneer material. Some grades of silicone sealants are not recommended by their manufacturers for applications on high-calcite content stone, as they may stain light-colored stones or may cause a change in surface moisture–absorption characteristics that can be seen whenever the stone is wet.

3.5.12.8 Repair

Should minor damage occur to the veneer stone during shipping, handling, or erection, field remedial work can be performed successfully. The precaster normally does such repairs, with repair procedures developed in consultation with the stone fabricator. If it is necessary to replace a stone piece, satisfactory techniques have been developed when the back of the panel is accessible or after the panels have been erected and the back of the panel is inaccessible.

3.5.12.9 Applications

Over the last 40 years, many structures have been constructed with stone veneer–faced precast concrete panels. Several examples are shown to illustrate the use of the various types of stone.

Marble: The base structure of the temple in Fig. 3.5.87(a) consists of $1^1/_4$ in. (3 cm) Vermont marble facing backed with 4 in. (100 mm) of precast concrete. Various stone clad panel shapes are shown in Fig. 3.5.87(b) and (c).

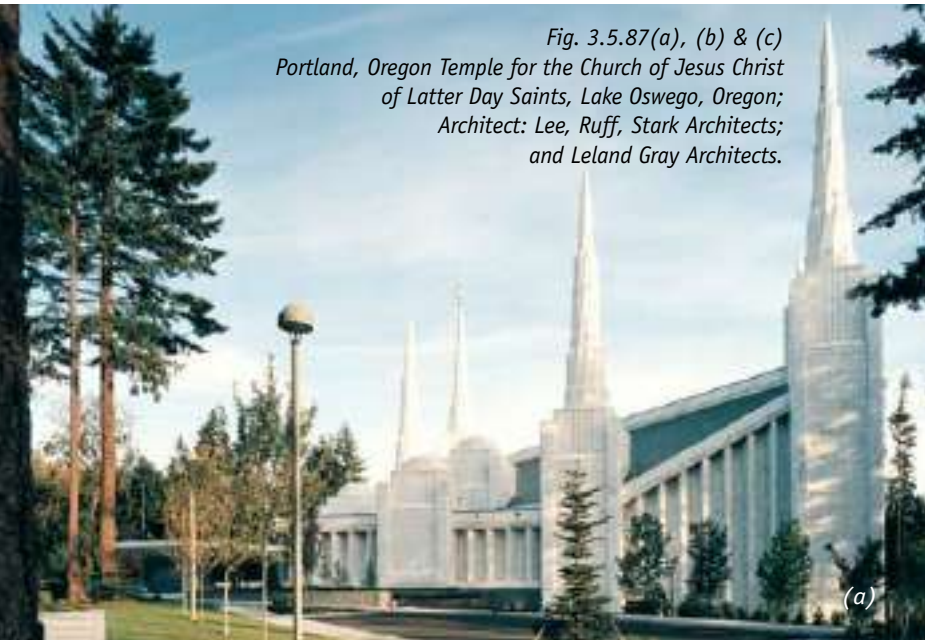

Fig. 3.5.87(a), (b) & (c)
Portland, Oregon Temple for the Church of Jesus Christ of Latter Day Saints, Lake Oswego, Oregon; Architect: Lee, Ruff, Stark Architects; and Leland Gray Architects.

Fig. 3.5.88(a) & (b)
Joslyn Art Museum
Omaha, Nebraska;
Architect: Sir Norman Foster and Partners, Design Architect;
Henningson, Durham & Richardson Inc., Architect of Record;
Photos: (a) HDR Architecture, (b) Patrick Drickey.

Architectural precast concrete panels for the new wing of the museum in Fig. 3.5.88(a) are clad in pink 1¼ in. (3 cm) Etowah Fleuri Georgia marble to match the original stone building constructed in 1931. Labor and material costs were reduced using this system compared to traditional stone cladding systems. There were 199 panels, with the heaviest piece weighing 22,100 lb (10,000 kg) (Fig. 3.5.88[b]). The precast concrete panels were stacked and laterally tied to the lightweight, structural steel structure.

Travertine: Over 73,000 pieces of 1¼ in. (3 cm) buff travertine were anchored to 7055 precast concrete panels to produce 600,000 ft^2 (55,800 m^2) of cladding for a 37-story administrative tower (Fig. 3.5.89) and a 14-story comptrollers building. The precast concrete units—wall panels, spandrels, and column covers—measure up to 5 ft (1.5 m) wide and 20 ft (6.1 m) long and weigh up to 6000 lb (2700 kg) each.

Fig. 3.5.89
SBC Headquarters
Dallas, Texas;
Architect: JPJ Architects;
Photos: (main) Wes Thompson Photography,
(inset) REES.

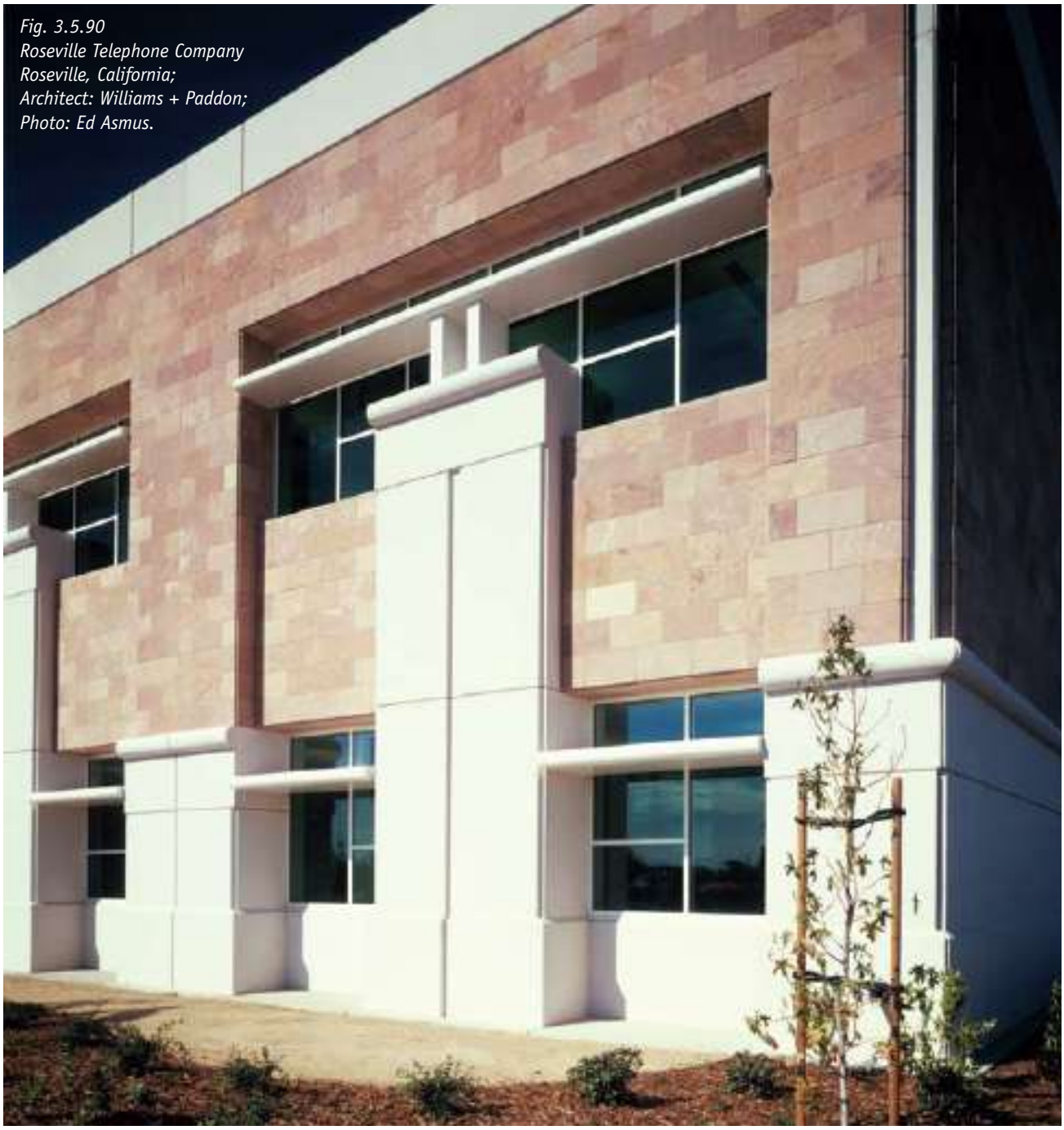

Fig. 3.5.90
Roseville Telephone Company
Roseville, California;
Architect: Williams + Paddon;
Photo: Ed Asmus.

Sandstone: Architectural precast concrete panels were integrally cast with $1^1/_4$ to $1^3/_4$ in. (3 cm to 44 mm) clefted Arizona Red Sandstone on 4-in.-thick (100 mm) concrete backing for the two-story structure, which added 78,000 ft^2 (7200 m^2) to an existing four-building campus (Fig. 3.5.90). Unique features include step-back chamfer detailing at corners and bullnoses. Window recesses and light shelves provide solar control and natural daylighting.

The lower three floors of the office building in Fig. 3.5.91(a) has 2 in. (50 mm) of red sandstone cast integrally in the 4-in.-thick (100 mm) precast concrete column covers and spandrels, which also have lightly sandblasted concrete areas (Fig. 3.5.91[b]).

Granite: The 26-story flatiron building rising from an 18,000 ft^2 (1700 m^2) triangular site is an outstanding example of stone veneer–faced precast concrete work.

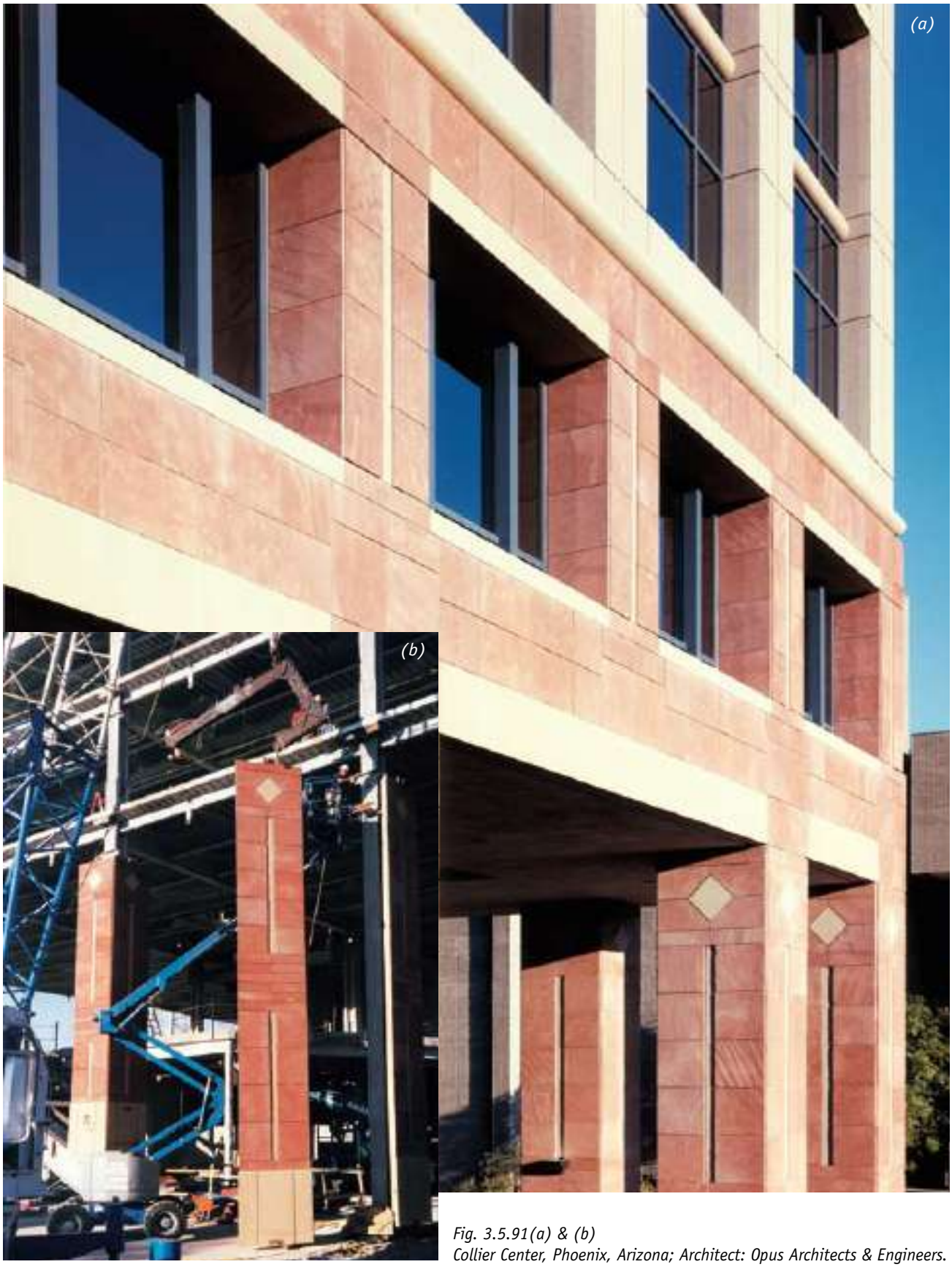

Fig. 3.5.91(a) & (b)
Collier Center, Phoenix, Arizona; Architect: Opus Architects & Engineers.

Fig. 3.5.92(a) & (b)
388 Market Street
San Francisco, California;
Architect: Skidmore Owings & Merrill;
Photos: Skidmore Owings & Merrill NYC.

The mixed use building is clad with 1915 precast concrete panels of varying size that are faced with $1^1/_4$ in. (3 cm) thick Imperial red granite (Fig. 3.5.92[a] and [b]).

The corporate office high-rise building in Fig. 3.5.93 features 1400 architectural precast concrete panels with embedded polished granite to achieve a level of detail that was not practical using handset granite. Acid-etched precast concrete resembling limestone was used at exposed corners on the street level, and throughout the tower where more intricate detail was desired.

Fig. 3.5.93
Campanile, Atlanta, Georgia; Architect: Thompson, Ventulett, Stainback & Associates Inc.; Photo: E. Allan McGee Photography.

Fig. 3.5.94
Terry Sanford Institute of Public Policy, (Duke University West Campus), Durham, North Carolina; Architect: Architectural Resources Cambridge Inc.; Photo: Jonathan Hillyer.

Limestone: Many college campuses feature a general architectural theme and many variations on that theme. Due to changing tastes, cost constraints, and material availability, a variety of styles are created through the years. The building in Fig. 3.5.94 re-established a strong design sense. The older campus buildings are richly detailed with pitched roofs, gothic towers, and window tracery. The building in Fig. 3.5.94 manages to recall the original collegiate gothic architecture of the campus while simplifying the construction process. Approximately 4500 pieces of gray, mottled, German (Jura) limestone were cast into the architectural precast concrete panels during fabrication and were anchored into the panels by stainless steel pins. The exposed surfaces used in detailing the gables, towers, and window framing were given a light sandblast finish to resemble sandstone. The German limestone replicates the coloring and texture of the original campus stone, connecting itself both visually and symbolically to the old campus.

The building in Fig. 3.5.95 is clad with $1^3/_4$ in. (44 mm) thick polychrome limestone supported on 2208 precast concrete panels. The beige and white-hued limestone fits comfortably within downtown, which is renowned for its flamboyant historical architecture. Precast concrete was selected as the backing for the limestone over other systems because of the plastic shaping possibilities that allowed substantial in-and-out relief in the exterior plane. Windows, for instance, are set back from the face of the building by an average of 16 in. (400 mm). The cost to achieve this degree of modeling

Fig. 3.5.95
GSA Federal Building, Oakland, California; Architect: Kaplan McLaughlin Diaz; Photo: Kaplan McLaughlin Diaz.

in the exterior skin was significantly less with precast concrete panels as opposed to other systems.

The project in Fig. 3.5.96(a) is comprised of limestone slabs cast on precast concrete panels. Precast concrete also forms the horizontal sunshade elements that provide shading relief to the interior perimeter spaces. The precast concrete panels became the structural system that carried the limestone between structural columns. The lower portion of the building (Fig. 3.5.96[b]), clad in

Fig. 3.5.96(a) & (b)
University of Chicago Graduate School of Business, Chicago, Illinois; Architect: Rafael Vinoly Architects, P.C.; Photos: Brad Feinknopf, Rafael Vinoly Architects.

a horizontal pattern of limestone panels, establishes the scale of the base of the building and echoes the horizontal composition of the neighboring Robie House.

Quartzite: The chapel portion of the hospital in Fig. 3.5.97(a) has concave precast concrete panels with 1 in. (25 mm) thick polished quartzite inlays cast into the panels. This saved thousands of dollars by not having to erect thousands of little pieces; it also reduced the material thickness. The inset thin brick panels are trimmed with acid-etched limestone finish to match a cut stone appearance. The brick panels on the main wall of the north hospital elevations are made with a convex radius to give a more distinct look and to set it off from the chapel. The medical office is comprised of both the brick and acid-etched panels on the upper levels and quartzite panels at the base and forming the columns, thereby blending into the other two parts of the project (Fig. 3.5.97[b]).

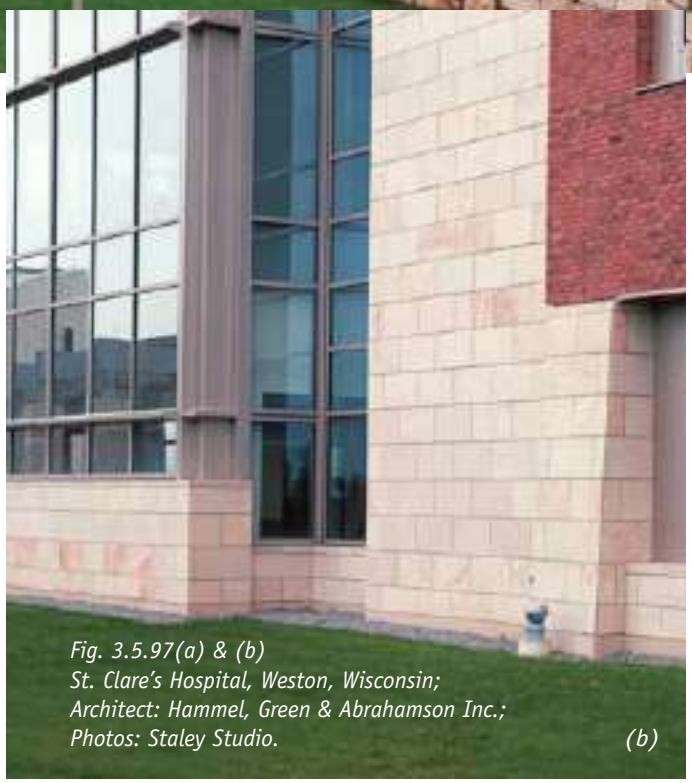

Fig. 3.5.97(a) & (b)
St. Clare's Hospital, Weston, Wisconsin;
Architect: Hammel, Green & Abrahamson Inc.;
Photos: Staley Studio.

Fig. 3.5.98
Liberty Place – Phase II, Philadelphia, Pennsylvania; Architect: Zeidler Roberts Partnership Inc.; Photo: Zeidler Roberts Partnership Inc.

Accents or Feature Strips: There are a variety of ways that stone veneer can be used as an accent or feature strip on precast concrete panels. Two approaches to accent or feature strip applications are shown in the following projects.

The final phase of the mixed-use complex in Fig. 3.5.98 encompasses a retail podium and a hotel. The first phase office tower was clad in bands of blue-pearl granite with silver and blue reflective glass, setting the context for the second phase. Granite bands and accents are employed in combination with sandblast-finished precast concrete panels. This resulted in an extremely viable alternative to the much more expensive option of exclusively using granite. The pattern of large reveals corresponds to the bands of the first phase and facilitated the installation of the granite bands and accents.

Some fourteen-hundred 6-in.-thick (150 mm) architectural precast concrete panels clad the hospital facility in Fig. 3.5.99(a). Red Spanish granite insets, $1^1/_4$ in. (3 cm) thick, with one anchor per 2 ft^2 (0.19 m^2), were provided to create an intermittent horizontal dark band running the length of the building at every story (Fig. 3.5.99[b]). This reflects the surrounding brick architecture of the neighborhoods. Green terra cotta medallions, interspersed among the granite bands at spandrel intersections, protrude out from the wall to add further detail and interest. Two different finishes were provided through different levels of sandblasting to produce contrasting finish textures around the windows, with reveals added between and around the insets and bands. Granite inserts highlight the light acid-etched panels in Fig. 3.5.100.

Fig. 3.5.99(a) & (b)
Shriners Hospital for Crippled Children,
Sacramento, California;
Architect: Odell Associates and HDR, Associate Architect.

Fig. 3.5.100
Walsh Library at Seton Hall University, South Orange, New Jersey (1994); Architect: Skidmore Owings & Merrill; Photo: Eduard Hueber/ Archphoto.com.

3.5.13 Applied Coatings

Because architectural precast concrete is a high-strength, durable product with integral color, either from the aggregates, cement, or pigments, it does not require staining or painting. Integrally colored concrete can provide significant long-term savings over the cost of surface coatings because the ongoing maintenance expense is eliminated. However, some projects use staining or painting for various reasons. For example, pigmented stains may be used to color the surface and blend in any panel discoloration to produce a more uniform appearance. If the entire panel is to be coated, it may be acceptable to permit a gray concrete that would not necessitate color control (basically a lesser quality of finish). In other words, the quality of finish color would not be expected to be a high-quality architectural finish.

Every paint and stain is formulated to provide certain performance characteristics under specified conditions. Because there is a vast difference in paint or stain types, brands, prices, and performances, knowledge of composition and performance standards is necessary for obtaining a satisfactory paint or stain for use on concrete.

The quality of paint for concrete is not solely determined by the merits of any one raw material used in its manufacture. Many low-cost paints with marginal durability are on the market. In order to select proper

Fig. 3.5.101
Lake County Office Center, Deerfield, Illinois;
Architect: Skidmore, Owings & Merrill;
Photo: Holmstrom Photography.

paints, the architect should consult with manufacturers that supply products that are known for their durability and, if possible, obtain technical data from them that explain the chemical composition and types of coatings suitable for the specific job at hand. For high-performance coatings, proprietary brand-name specifications are recommended.

Paints are a mixture of pigment, which hides the surface, and resin, which binds the pigment together. The amount of pigment in proportion to the resin and the type of resin will affect the fluidity, gloss, and durability of the paint.

The pigment volume concentration (PVC) compares the amount of pigment in a paint to the amount of binder. As the PVC increases, the paint has more pigment and less binder. High PVC paints (45 to 75%) generally brush on easier, have greater hiding power, and usually cost less than low PVC paints. Low PVC paints (10 to 22%) are generally more flexible, durable, and are glossier.

Coatings applied to exterior surfaces should be of the breathing type, permeable to water vapor but impermeable to liquid water. Typically, latex paints are suitable for most exterior applications. Typically, latex paints or epoxy, polyester, or polyurethane coatings may be applied to the interior surface of exterior walls if a vapor barrier (paint or other material) is necessary. See Section 3.5.16 for finishing procedures for interior surfaces to be painted.

The coating manufacturer's instructions regarding mixing, thinning, tinting, surface preparation, and application should be strictly followed.

The smooth gray finish on the spandrel panels in Fig. 3.5.101 was painted at the jobsite in tan and maroon and the ends of the large bullnoses were gilded with gold leaf.

The designers of the dormitory (Fig. 3.5.102[a] & [b]) sought to visually break up the building's massive appearance by using step-backs and different colors. On

the first two floors, a band of color breaks up the seven-story height-a two-story band with three individual colors on each bay as a step-back, then a band across the top.

Architectural precast concrete panels with a brick form liner, stained in the plant to control quality, were selected to simplify construction, improve cost efficiency, and shorten construction time (Fig. 3.5.103). The exterior surface treatment of each panel consists of fields of brick pattern subdivided by horizontal bands of what appears to be stone projecting 1 in. (25 mm). At the base of each 10-ft-wide (3 m) panel, an additional form liner type is used to give the appearance of a rusticated base.

3.5.14 Architectural Trim Units

Cast stone is a type of architectural trim (AT) unit, manufactured to simulate natural cut stone, used in masonry applications. It is generally used as ornamentation and architectural trim for stone bands, sills, lin-

(a)

Fig. 3.5.102(a) & (b) Residence Hall One, University of South Florida, St. Petersburg, Florida; Architect: KBJ Architects Inc.; Photos: Clay Callahan.

Fig. 3.5.103
Lock-Up Self Storage Center,
Park Ridge, Illinois; Architect: Sullivan Goulette Wilson, Ltd. formerly Sullivan Goulette, Ltd.; Photo: Sullivan Goulette Wilson, Ltd.

tels, copings, ashlar veneer, balustrades, and door and window surrounds, where natural cut stone may otherwise be used in masonry wall systems.

Because it is a "building stone," architectural trim units are usually specified under the masonry section (047200) rather than section 034500 of the project specifications where architectural precast concrete is normally specified. Architectural trim units are usually installed by the mason contractor, rather than the precast concrete erector. Because of different setting procedures used for each application, projects utilizing both materials should have specifications governing each.

The two most widely used casting methods today are the dry tamp and wet cast methods. Both require a carefully proportioned mixture consisting of graded and washed natural sand or manufactured sands of granite, marble, quartz, or limestone meeting the requirements of ASTM C 33, except that gradation may vary to achieve the desired finish. A 1:3 cement-aggregate ratio mixture is proportioned for a maximum density and to meet the surface finish requirements. Units may be either homogenous throughout or consist of a face mixture and a backup mixture. A fine-grained texture similar to natural cut stone, with no bug/blow holes or air voids in the finished surface, is produced.

In the dry tamp method, a pneumatic machine rams and vibrates moist, zero-slump concrete against rigid formwork. When the concrete is densely compacted, it is removed from the form and cured overnight in a moist, warm room. The limitation of this method is that it generally requires one flat, unexposed side in the design of the basic section. L-shaped, U-shaped, or cored-out stones can be made; however, the designer should be aware that these specially shaped units must be hand-molded and will result in higher unit costs. Where return legs are essential to the design, the depth of returns should be standardized at 6 or 8 in. (150 or 200 mm) for ease of manufacture. So long as the return leg equals the depth of the section, no additional cost is incurred (Fig. 3.5.104).

Fig. 3.5.104 Returns in cast stone.

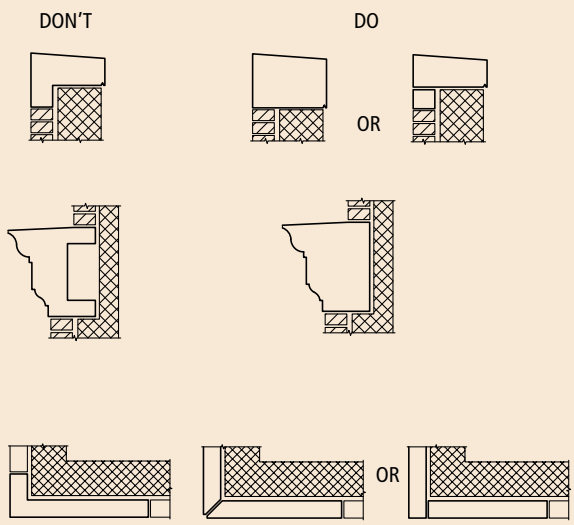

The wet cast method is similar to the production process for architectural precast concrete. Mixture designs usually have a maximum $^3/_8$ in. (10 mm) coarse aggregate and are comprised of an abundance of fines, typically 15% very fine sand. L-shaped stones should be avoided as it is difficult to produce a good finish with no bugholes on these shapes.

To help strip the stone from the mold, a minimum 1:8 draft should be designed for all surfaces perpendicular to the face pattern. This minimizes the number of mold pieces required to create the face pattern. Negative draft profiles should be avoided whenever possible.

Cast stone should have a minimum thickness of $2^1/_2$ in. (63 mm) to reduce stripping, handling, and packaging costs. A $2^1/_2$ in. stone generally costs the same as a 4-in.-thick (100 mm) stone. The thickness of a projection should be twice the length of the projection.

Dimensional tolerances are as follows:

Cross-section dimensions . .	$\pm^1/_8$ in. (±3 mm)
Length (in inches)	*L*/360 or $\pm^1/_8$ in. (±3 mm) whichever is greater, not to exceed $\pm^1/_4$ in. (±6 mm)
Maximum length	<15 times effective cross-section thickness
Warp, bow, or twist.	*L*/360 or $\pm^1/_8$ in. (±3 mm), whichever is greater
Location of dowel holes, anchor slots, flashing grooves, false joints, and similar features	
Formed sides of unit	$^1/_8$ in. (3 mm)
Unformed sides of unit	$^3/_8$ in. (9 mm)

The compressive strength of cast stone should be a minimum of 6500 psi (45 MPa), determined by testing 2 in. (50 mm) cubes in accordance with ASTM C 1194 (equivalent to about 5000 psi (34.5 MPa) for 6 in. [150 mm] cylinders). The units should have a cold water absorption of less than 6% by weight when tested in accordance with ASTM C 1195, Method A, or less than 10% when tested in accordance with Method B. The amount of reinforcement in units with a dimension greater than 12 in. (300 mm) in more than one direction should not be less than 0.25% of the cross-sectional area.

Architectural trim units produced by the wet cast method allow the use of air entrainment to obtain freezing and thawing durability. The air content for wet cast products used in a freezing and thawing environment should be 4 to 6%. For dry tamp products, freezing and thawing resistance may be tested according to ASTM C 666, Procedure A, as modified by ASTM C 1364 (weight loss 5% after 300 cycles). Also, sills, copings, and projecting courses should have a slope (wash surface) of 1:12 (25 mm in 300 mm) to allow water runoff on exposed top surfaces to prevent saturation of the unit.

Cast stone is available in a variety of colors, shapes, and finishes. Typical colors will match either natural stone, brick, or terra cotta. The support system and setting techniques will influence the size of the cast stone pieces. Cast stone is normally anchored to masonry or concrete walls or a steel stud grid. The size limitations of cast stone are about the same as those of natural cut stone, usually about 3 to 6 ft (0.9 to 1.8 m) long. Length should be kept within 15 times the maximum cross-section thickness whenever possible. Longer lengths invite cracking and handling problems. Similar to architectural precast concrete, the key to optimum economy is repetition of ornament. Cast stone is typically given an acid-etch finish and the surface texture matches cut stone (sand texture, cleft or stippled face, cut tooled, or bushhammered). In some cases, the stone is given a rubbed or abrasive blasted finish to expose the aggregates and simulate limestone.

When cast stone is used as part of a brick veneer system, consideration must be given to the differential

temperature and moisture volume movements of the various materials by limiting lengths to prevent mortar debonding and by proper location of control joints. A bond break should be provided between clay brick and cast stone banding to accommodate the differential movement that will occur. Flashing is often placed either directly above or below the banding course. When the accent band consists of more than one course, a crack in a head joint will frequently continue through the body of the unit located above or below. Therefore, a single course accent band is recommended or stack bond should be designed if more than one course is desired.

Curved sections should be kept shorter than 4 ft (1.2 m) whenever possible and the major unexposed back surface should be flat. Sufficient clearance in the masonry wythe or structural wall section should be provided. A sill section generally presents no problem when designed with a radius front and rear because the major unexposed side is flat at the masonry bed joint.

Not all joints between cast stones or between cast stone and other materials should be filled with Type N mortar (ASTM C 270). All head joints at coping stones and joints at column covers, cornices, platforms, soffits, window sills and in general, all stone sections with projecting profiles, exposed top joints, or rigid suspension connections to the supporting structure should be "soft" sealant joints. Mortar joints are best suited for masonry-bound trim items such as belt courses, lintels, window surrounds, date stones, inscription blocks, quoins, keystones, and similar applications. Anchors, ties, and flashing are built into mortar joints as units are set.

Regardless of whether mortar or sealant is selected as the face joint material, the mortar must be raked out of the joint to a minimum depth of $^3/_4$ in. (19 mm). Mortar joints should be pointed by placing and compacting mortar in layers not greater than $^3/_8$ in. (10 mm). Each layer should be compacted thoroughly and allowed to become thumbprint-hard before applying next layer. Exposed joints should be tooled slightly concave when thumbprint-hard using a jointer larger than joint thickness. If sealant is to be used at the head joints, then no mortar should be used there. Sealant joints allow for movement at the vertical joints. Pointing is required because mortar shrinks and cracks, which can cause leaks.

Bed (collar) joints in most hand-set stones may be set with the usual wet consistency mortar used in setting masonry. Stiffer mortar must be used when setting larger stones, and plastic or lead shims are recommended for all pieces over 300 lb (136 kg). When setting, fill all dowel holes, anchor slots, and similar building stone anchor pockets completely with mortar. Non-shrink grout may be specified for dowel connections. Accent band bed joints should be raked and caulked to encourage cracks in the mortar joints rather than through the cast stone units.

Through-wall flashing and weep holes should be used at all interruptions in the wall, such as at window heads and relieving angles, or at a change in material, such as stone to brick. Flashing consisting of stainless steel, EPDM, or rubberized asphalt must be continuous and properly lapped and sealed at the base of the wall and at relieving angles. When flashing is used over openings, such as at windows, end dams are required. In the case of a masonry backing wythe, the flashing should be turned up a minimum of 8 in. (200 mm) and extend into the masonry backing.

Open weep hole head joints of at least 1 in. (25 mm) are recommended. They should be spaced no more than 24 in. (600 mm) apart. Rope wicks can also be used, but weep holes should be placed closer together, at 16 in. (400 mm) on center, because wicks do not drain as quickly. Plastic tubes are not recommended because they are easily clogged by mortar or insects. In stones over 24 in. (600 mm) in length, a $^3/_8$-in.-wide (10 mm) by 1-in.-high (25 mm) notch through the base of the stone is recommended for drainage. Unnecessarily long lengths of stone are discouraged because adequate drainage between weep holes can be a problem.

Copings perform best when the mortar bond with the masonry wall is maintained. For this reason, flashing should not extend over the full width below the coping. Instead, the flashing should be turned down into the drainage cavity and then out through the exterior supporting wythe below. To minimize the chance of water intrusion, bridge coping stones over vertical control joints (Fig. 3.5.105). Fill the joints between coping stones with sealant and place sealant, instead of mortar, in the bed joint from the control joint to the nearest joint in the coping.

For optimum economy, standard building stone anchors should be used whenever possible. Two anchor slots are provided in the top of most trim stones to receive anchor straps. Alternatively, a continuous anchor slot may be used. This eliminates the need to locate

Fig. 3.5.105 Coping joints.

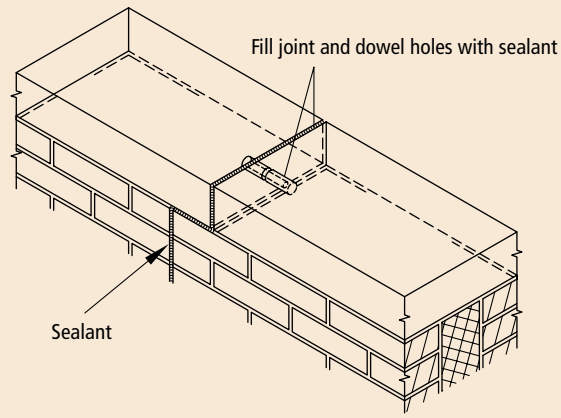

anchors in the field. Dowel holes, continuous relieving angles, and anchor straps are preferred over embedded inserts and weld plates. A continuous relieving angle is the most economical support system. The stone anchors and other accessories are all furnished by the masonry or general contractor or the stone setter. For anchors, dowels, and ties, it is necessary to specify the type of material, corrosion resistance (Eraydo alloy zinc, galvanized steel, brass, or stainless steel, Type 302 or 304), and dimensions. The anchors may be required to penetrate flashing to allow a secure connection to the structure. Where this occurs, proper steps must be taken to ensure a watertight connection at the interface so that the anchor does not compromise the integrity of the flashing. Grommets, thimbles, sleeves, couplings, and sealants are available for this purpose. Raised fillets (lugs) should be provided at backs of sills and at ends indicated to be built into jambs.

Because cast stone is a masonry product that is usually built into a brickwork façade, brick coursing tables must be used in determining the sizes of the units. When determining the height of cast-stone window heads and sills, the following should be considered:

1. The bottom of the sill to the bottom of the lintel must always equal a brick coursing dimension.
2. The lintel height (if stone) equals brick coursing dimension minus one joint.
3. The sill height equals a brick coursing dimension to the bottom of the lintel, minus the window dimension.
4. The height of the lug must equal a brick coursing dimension minus one joint.
5. Quoins should be sized in length to match the running bond of the brickwork and must match brick coursing in height, minus one joint.

Slip sills have no lugs and the lengths are figured $^1/_2$ in. (13 mm) less than the brick masonry opening (for a $^1/_4$ in. [6 mm] mortar joint) or $^3/_4$ in. (19 mm) less where sealant is desired to provide a $^3/_8$ in. (10 mm) joint. Window sill joints are centered under mullions. Drips should be provided on projecting elements, such as heads and sills, to prevent staining.

When cast stone is used as part of a brick façade, consideration must be given to the differential movement of the two materials by proper location of control joints. All brick veneer control joints should extend into the cast stone.

Extreme care should be used when cleaning a brick façade to avoid acid runoff onto the architectural trim units.

Installation tolerances are as follows:

1. Variation from plumb . . . . . $^1/_8$ in. in 10 ft (3 mm in 3 m) or $^1/_4$ in. in 20 ft (6 mm in 6 m) or more.
2. Variation from level. . . . . $^1/_8$ in. in 10 ft (3 mm in 3 m), $^1/_4$ in. in 20 ft (6 mm in 6 m), or $^3/_8$ in. (10 mm) maximum.
3. Variation in joint width . . . . . $^1/_8$ in. in 36 in. (3 mm in 900 mm) or $^1/_4$ of the nominal joint width, whichever is less.
4. Variation in plane between adjacent surfaces (Lipping) . . . . . $^1/_8$ in. (3 mm).

Acceptance criteria are as follows:

1. All surfaces intended to be exposed to view should have a fine-grained texture similar to natural stone, with no air voids in excess of $^1/_{32}$ in. (0.8 mm) and the density of such voids shall be less than three occurrences per any 1 in.^{2} (25 mm^2) and not obvious under direct daylight illumination at a distance of 5 ft (1.5 m). Visible cracks exceeding 0.005 in. (0.13 mm) are not acceptable.
2. Units should exhibit a texture approximately equal to the approved sample when viewed under direct

daylight illumination at a 10 ft (3 m) distance. Also, minor chipping should not be obvious under direct daylight illumination at a distance of 20 ft (6 m). Testing for color variation should be performed according to ASTM D 2244. The permissible variations in color between units of comparable age subjected to similar weathering exposure are:

a. Total color difference – not greater than 6 units.

b. Total hue difference – not greater than 2 units.

Figures 3.5.106 and 3.5.107 show typical applications of cast stone. These include window surrounds such as sills, mullions, jambs and headers, entry feature panels, quoins, and parapet wall cap copings (Fig. 3.5.106). However, designers should be aware that most architectural precast concrete producers do not manufacture cast stone and availability and cost should be checked prior to specifying.

The high-tech research laboratory reflects the gothic architecture of its historic campus (Fig. 3.5.107[a]), characterized by large stone piers and pointed arches. Buff-colored cast stone with a light sandblast finish create some of the tower and interest elements of the building. The cast stone and precast concrete complement other colors and patterns on campus in a more contemporary and interpretive way (Fig. 3.5.107[b]).

Fig. 3.5.106
Park Cities Baptist Church, Dallas, Texas;
Architect: F&S Partners Inc.; Photo: ©Craig D. Blackman, FAIA.

Fig. 3.5.107(a) & (b)
Duke University – Center for Models of Human Disease,
Durham, North Carolina;
Architect: Lord Aeck Sargent;
Photos: Jonathan Hillyer Photography, Inc.

3.5.15 Matching of Precast and Cast-In-Place Concrete

Architectural precast concrete panels are often used in combination with architectural cast-in-place concrete. The exact "matching" of finishes is extremely difficult and may not be achievable in a cost-effective manner. The process must be planned prior to start of construction in order to consider adjustments in mixture design, placement technique, methods of consolidation, and finishing procedures. Samples and full-scale mockups should be prepared for both the architectural precast concrete and the architectural cast-in-place concrete, and normal differences addressed prior to finalizing either finish.

Generally, only large projects can justify the increased cost required for mockups, mixture design control, tight leakproof forms, and ready-mix concrete using special or colored cements, or uncommon aggregates. All of these features may be needed to obtain a satisfactory match-up between architectural cast-in-place concrete and precast concrete panel finishes.

Aggregate orientation cannot be controlled during placement and consolidation of the architectural cast-in-place concrete; rounded or cubical coarse aggregate are best when trying to match finishes using the different production methods. An acceptable blending of the two different production techniques should acknowledge the distinction between the processes. It may be desirable to provide for contrasting colors and textures between precast concrete and cast-in-place architectural elements. Finishes such as chemical retardation or sandblasting should be used to obtain the best match. The precast concrete façade in Fig. 3.5.108 has expressed recesses at exposed cast-in-place concrete columns and open precast concrete frame work at wall

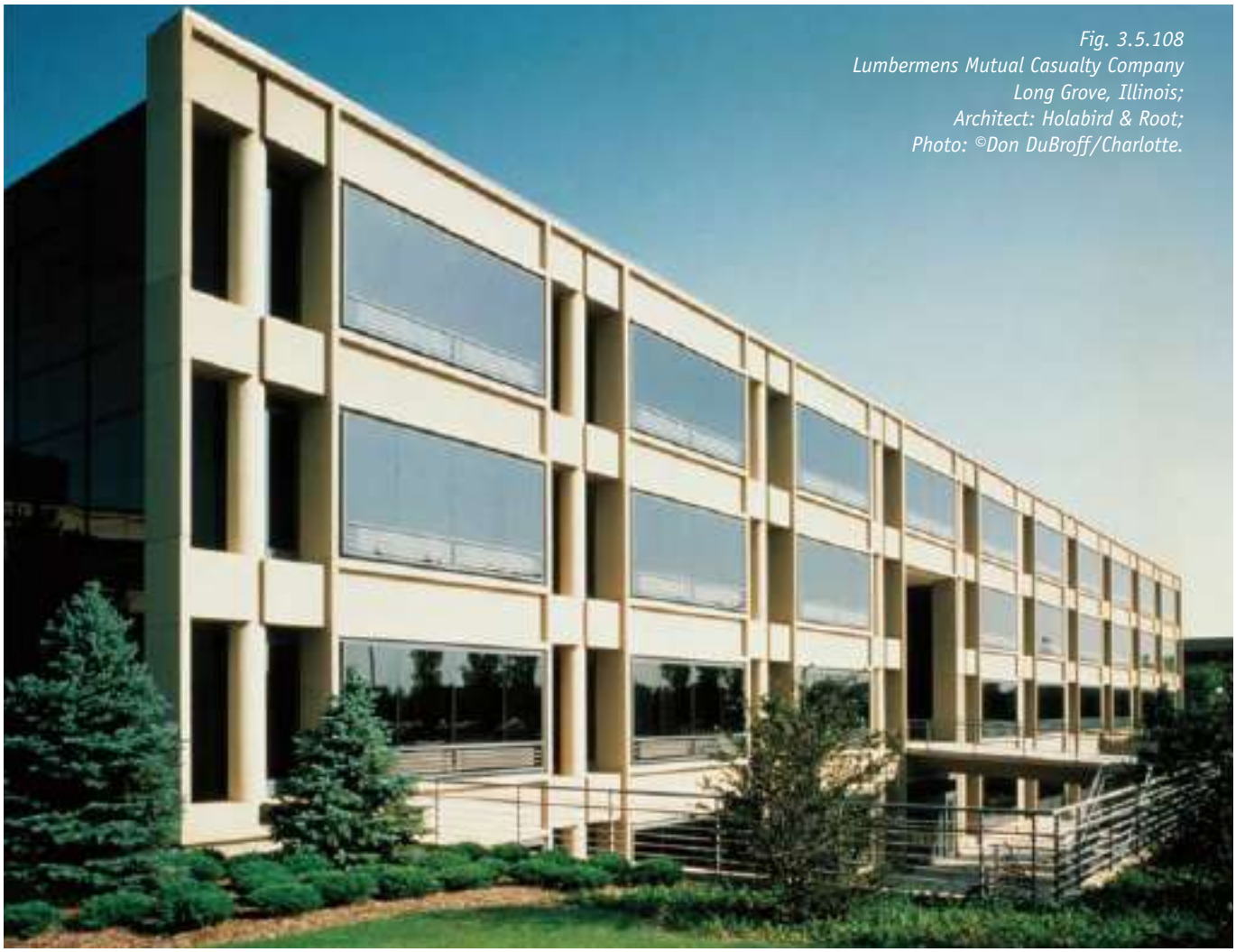

Fig. 3.5.108
Lumbermens Mutual Casualty Company
Long Grove, Illinois;
Architect: Holabird & Root;
Photo: ©Don DuBroff/Charlotte.

end sections. In tying the precast concrete components into the columns, the same high level of sandblast finish was required on all exposed surfaces. Bug/blow holes in cast-in-place concrete are not unusual when the texture selected is a sandblast finish.

When both techniques meet in the same plane, the architectural cast-in-place concrete tolerances must be strictly enforced. Differences in the curing methods between the two techniques, even with identical mixtures, may cause color variations in the finish, particularly if the precast concrete uses accelerated high-temperature curing. Even when the match-up is very good at the time of initial construction, different weathering patterns may result from dissimilarity in concrete densities.

3.5.16 Finishing of Interior Panel Faces

The back of a precast concrete panel (normally the face-up side in the mold) is typically designed to be flat and level during the casting operation. This is particularly important if this face is exposed as part of the interior finish.

Exposed interior surfaces should have finishes that are realistic in terms of exposure, production techniques, configuration of the precast concrete units, and quality requirements. The finish requirements and area of exposure for all exposed unformed surfaces should be shown on the contract drawings. The back of a precast concrete panel may be given a screed, light broom, float, trowel, stippled, water-washed or retarded exposed-aggregate finish or sandblast finish. A trowelled finish is the most common interior finish. Troweling frequently darkens the surface in uneven patterns.

All edges of precast concrete units that are exposed to view in the completed structure and caulked should have a radius, rather than be left as a sharp corner. For backs of panels that are to receive insulation, the need for a particular degree of smoothness will depend on the insulation. The finish should normally be as smooth as a good wood float finish. If one face of a unit must be absolutely smooth and true, it should usually be the face-down surface for uniformity and economy.

The exposed-aggregate procedures for finishes cast face-up are not similar to those previously described for face-down casting and may not always result in the same appearance.

Vibration (consolidation) of precast concrete usually forces large aggregate pieces to the bottom of the mold whereas finer particles are displaced to the top face. To expose aggregate on the top surface, this surface may be either water-washed and brushed after the concrete has obtained initial set, a retarder may be applied and the surface washed the following day; or the surface sandblasted in the usual manner. In either case, hand-placing (seeding and tamping or rolling) of the larger aggregates should be done after concrete consolidation.

Interior finish requirements should be related to the configuration of the precast concrete units. This will be apparent by considering the different mold setups shown in Fig. 3.5.109. "A" is the most common condition. "B" is similar, but with bulkhead-type top-forms used to form a beam (or haunch) on the back of the panel. "C" shows a mold with special top-forms for molding the interior of the returns.

Fig. 3.5.109 Typical molds and finishes of back of panels.

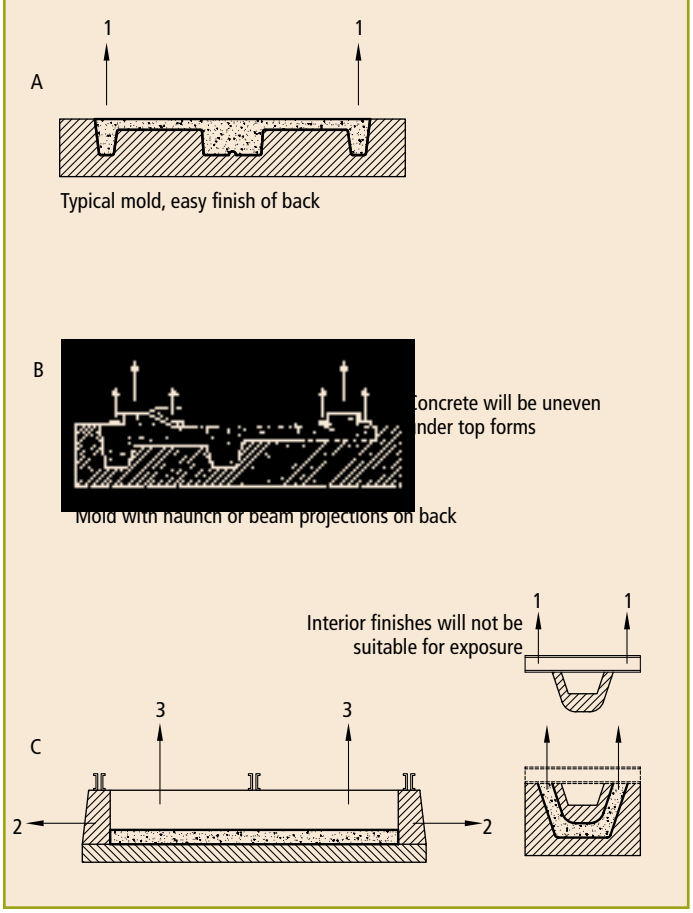

Where top forms are necessary, covering of the back of panels is recommended, because finishing cost will be higher than for plain, level surfaces.

The floating or finishing operation should not result in high areas or ridges around plates or inserts that have been cast into the unit. Screeded areas should ensure a uniform thickness across the entire unit that is within tolerance limits.

3.5.17 Acceptability of Appearance

Contract documents must identify who the accepting authority will be: architect, owner, general contractor, or site inspector. One person must have final and undisputed authority in matters of acceptability of color, finish, and texture, in compliance with the contract documents.

Determining acceptable uniformity of color, finish, and texture is by visual examination, and is generally a matter of subjective, individual judgment and interpretation. The acceptable variations should be determined at the time the visual mockups or initial production units are approved (see Section 3.2.4). Accordingly, it is beyond the scope of this manual to establish definitive rules for product acceptability on the basis of appearance. However, suitable criteria for acceptability require that the finished concrete face surface should have no readily visible imperfections other than minimal color and texture variations from the approved samples or evidence of repairs when viewed in good, typical daylight illumination with the unaided naked eye at a 20 ft (6 m) or greater viewing distance. Appearance of the surface should not be evaluated when light is illuminating the surface from an extreme angle as this tends to accentuate minor surface irregularities due to shadowing.

Building façades may be oriented such that sunlight just grazes the surface at a particular time of day. This causes otherwise imperceptible ripples, projections, and misalignments on the surface to cast long shadows and be grossly exaggerated in appearance. The shadows may last briefly. The actual time at which they appear varies with the season for a particular wall. Precast concrete, like any building surface, is subject to manufacturing and alignment tolerances so that the effect cannot be avoided.

Units should be assessed for appearance during dry weather. The difference in tone between wet and dry panels is normally less with white concrete. In climates with intermittent dry and wet conditions, drying-out periods may produce temporary mottled appearances.

It would be optimistic to imagine that every unit cast during the course of a contract will be identical. **The following is a list of finish defects and/or problems that are normally unacceptable in high-quality architectural precast concrete.** Design and manufacturing procedures should be developed to counteract or remedy them, unless they are specially desired by the architect or are inherent in the design of the unit. If such "defect expressions" are specified by the architect, or are unavoidable, they should be agreed upon by the precaster and the architect in the form of approved samples and/or initial production units.

Erected panels not complying with the contract documents may require additional work. The architectural precast concrete panels should be corrected to match the repairs demonstrated on the mockup.

1. **Ragged or irregular edges.** When sharp edges are specified, minor chips and irregular edges are unavoidable and should be acceptable.
2. **Excessive air voids (commonly called bugholes) evident on the exposed surfaces.** If the air voids are of a reasonable size, $^1/_8$ to $^1/_4$ in. (3 to 6 mm), it is recommended that they be accepted as part of the texture. Filling and sack-rubbing could be used to eliminate the voids. However, this procedure may cause color differences. Samples or the mockup panel should be used to establish acceptable air void size, frequency, and distribution.
3. **Adjacent flat and return surfaces with greater texture and/or color differences than the approved samples or mockups.**
4. **Casting and/or aggregate segregation lines evident from different concrete placement lifts and consolidation.**
5. **Visible mold joints, seams, or irregular surfaces in excess of or larger than those acceptable in the approved samples or mockups.**
6. **Rust stains on exposed surfaces.**
7. **Excessive variation of texture and/or color from the approved samples, within the unit, or compared with adjacent units.**
8. **Blocking stains evident on exposed surface.**
9. **Areas where the backup concrete penetrated through the facing concrete.**

10. **Foreign material embedded in the face of the unit.**
11. **Repairs visible at 20 ft (6 m) or greater viewing distance.**
12. **Reinforcement shadow lines (see Section 4.4.5).**
13. **Cracks visible at a 20 ft (6 m) or greater viewing distance.** The cement-rich film on smooth concrete may develop a network of fine random hairline cracks (crazing) when exposed to wetting and drying cycles. A hairline crack is defined as a surface crack of minute width and rarely more than $^1/_8$ in. (3 mm) deep, visible to the naked eye but not measurable by ordinary means. One of the primary causes of these types of cracks is the shrinkage of the surface with respect to the mass of the unit, due to a cement-rich mixture. Another cause may be stripping of the panel too early (inadequate strength and curing), although this type of crack may be structural.

    Crazing is merely a surface phenomenon (penetrates only as deep as the thin layer of cement paste at the surface of the panel) and has no structural or durability significance but it may become visually accentuated when the surface is wetted or dirt settles in these minute cracks. Crazing is more likely to show up in white or light-colored concrete than with gray or a dark color, because the dirt is more visible on the white, but the effect will depend on the character of the cement film. A relatively lean, properly consolidated concrete mixture will show little crazing, in contrast to a mixture rich in cement and water. Where crazing occurs, a horizontal surface will be affected more than a vertical surface due to the settlement of dirt on the former. Crazing generally will not appear where the outer cement skin has been removed by a surface finishing technique. Such cracks are of little importance and should not constitute a cause for rejection.

    Precast concrete generally undergoes far less cracking than cast-in-place concrete. This resistance to cracking is due, in part, to the greater compressive and tensile concrete strengths possible with precast concrete. It should be recognized that a certain amount of crazing or cracking may occur without having any detrimental effect on the structural capacity of the member and it is impractical to impose specifications that prohibit cracking. However, in addition to being unsightly, cracks are potential locations of concrete deterioration, and should be avoided if possible. Proper reinforcement locations, prestressing, and proper handling procedures are the best methods to keep cracks to a minimum. The acceptability of crazing or cracking should be determined with respect to actual service condition requirements, structural significance, and aesthetics.

    Tension cracks are sometimes caused by temporary loads during production, transportation, or erection of the products. The amount and location of reinforcing steel has a negligible affect on performance until a crack develops. As flexural tension increases above the modulus of rupture, hairline cracks will develop and extend a distance into the element. If the crack width is narrow, not over 0.012 in. (0.30 mm), the structural adequacy of the casting will remain unimpaired, as long as corrosion of the reinforcement is prevented (see Section 4.4.7). Accordingly, wall panels containing cracks up to 0.005 in. (0.13 mm) wide for surfaces exposed to the weather and 0.012 in. (0.30 mm) wide for surfaces not exposed to the weather should be aesthetically acceptable, provided the reinforcement is galvanized or otherwise corrosion resistant. The limitation on crack-size specified is for structural reasons. The aesthetic limitation will depend on the texture of the surface and the appearance required. On coarse textured surfaces, such as exposed-aggregate concrete, and on smooth surfaces comparable to the best cast-in-place structural concrete, the structural limitation would be aesthetically acceptable. For smooth surfaces of high quality it may be desirable to limit cracking in interior panels to 0.005 in. (0.13 mm). In addition, it should be noted that cracks may become even more pronounced on surfaces receiving a sandblasted or acid-etch finish.

3.5.18 Repair and Patching

The techniques and materials for repairing precast concrete are affected by a variety of factors including mixture ingredients, final finish, size and location of damaged area, temperature and humidity conditions, age of member, and surface texture.

A certain amount of product repair is to be expected as a routine procedure. The precast concrete elements

may sustain superficial damage (minor chipping and spalling) during handling, transportation, or erection that may require jobsite repair. Repair and patching of precast concrete is both an art and a skill requiring expert craftsmanship and careful selection and mixing of materials, to ensure the end result is structurally sound, durable, and aesthetically pleasing. Major repairs should not be attempted until an engineering evaluation is made to determine whether the unit will be structurally sound and if so determined, the repair procedure should be approved by the precast concrete design engineer.

Trial mixtures are essential to determine exact quantities for the repair mixture to effectively match color and texture. This is best determined by applying trial repairs to the project mockup or small sample panels [12 x 12 in. (300 x 300 mm)]. The trial repairs should be allowed to cure, followed by a normal drying period. This is important because curing, weathering, and ultraviolet bleaching of the cement skin affect the finished color. Because of these factors, it is unreasonable to require an instant color match at time of repair. All parties should agree on the acceptability criteria for repairs at an early stage of the project.

It is recommended that the precaster execute all repairs or approve the methods proposed for such repairs by other qualified personnel. The decision of when to perform the repairs should be left up to the precaster, who should be responsible for satisfactory final appearance.

It is important that all repair of damaged precast concrete unit edges be carried out well in advance of the joint sealing operation. The repair work should be fully cured, clean, and dry prior to caulking.

Repairs should be done only when conditions exist that ensure that the repaired area will conform to the balance of the work with respect to appearance, structural adequacy, and durability. Slight color variations can be expected between the repaired area and the original surface due to the different age and curing conditions of the repair. With time (several weeks) and exposure to the environment the repair will blend into the rest of the member so that it becomes less noticeable. Excessive variation in color and texture of repairs from the surrounding surfaces may be cause for rejection until the variation is minimized. Repairs should be evaluated when the concrete surface is dry.

Precise methods for repair are not detailed in this manual. (See *PCI Erectors Manual: Standards and Guidelines for the Erection of Precast Concrete Products*, Appendix E-Repair Procedures, MNL-127 for guidance on repair techniques and materials.) Precaster should be requested to submit recommended repair procedures.

3.6 WEATHERING

3.6.1 General

A primary consideration in the architectural design of buildings should be weathering, that is, how the appearance changes with the passage of time. Weathering affects all exposed surfaces and cannot be ignored. The action of weathering may enhance or detract from the visual appearance of a building, or may have only a slight effect. The final measure of weathering's effect is the degree to which it changes the original building appearance and distorts the designer's original intention by streaking or shading.

Visual changes occur when dirt or air pollutants combine with wind and rain to interact with the wall materials. The run-off water may become unevenly concentrated because of façade geometry and details. The manner in which water is shed off the structure depends primarily on the sectional profiles of the vertical and horizontal discontinuities designed into the wall.

Through the years, designers controlled the water flow down specific parts of a structure with copings, drip grooves, gargoyles, window sills, and plinth details. However, many of these useful and relevant details have been discarded as superfluous decoration.

For architectural precast concrete (as well as all other building materials), the awareness of weathering should be reflected in the design of wall elements and the integration of windows to control water sheeting and penetration and to manage water run-off. Staining that occurs through differential surface absorption and uneven concentrations of dirt due to water run-off are considered the most common weathering problems.

Many of the effects of weathering can be predicted by studying local conditions and/or existing buildings in the area. This will often give a clear indication of the levels of pollution; the velocity, principal direction and frequency of wind; and the intensity, duration, and frequency of rainfall; together with records of temperatures and relative humidity. All these factors will affect the way exposed concrete will get wet and dry out. With proper attention to the causes and effects of weathering, potentially detrimental results can be eliminated or at least minimized. Design tools for con-

trol of weathering are the massing and detailing of the building and the color, texture, and quality of the surface finishes. Precast concrete will become dirty when exposed to the atmosphere, just like any other material. Fortunately, with architectural precast concrete, the designer can choose shapes, textures, and details to counteract many of the negative effects of weathering. Although regular cleaning of a building may make detailing a less critical factor, maintenance costs should be balanced against initial design costs.

One of the major contributing factors to the weathering of precast concrete is dirt in the atmosphere. Atmospheric dirt or air pollutants include smoke or other gases, liquid droplets, grit, ash, soot, organic tars, and dust. Gaseous pollutants include SO_2, NO_X, H_2S, NH_3, and O_3. Sulphur dioxide (SO_2) can react with the lime in the concrete and the oxygen from the air to form gypsum (see Section 5.2.4). Gypsum's solubility allows for it to be washed away, taking dirt with it. Where there is insufficient water to wash it away it can encapsulate dirt and hold it.

The concentration of SO_2 and other corrosive compounds is high in some urban environments. When dissolved in rainwater, SO_2 produces dilute sulfurous or sulfuric acid. These acids etch cement-rich paste and carbonated precast concrete surfaces, producing a gradual change in color as the fine aggregate becomes exposed.

Figure 3.6.1 shows the pH of acid deposition falling in the U.S. during 2005. Although acid deposition (acid rain) is technically defined as precipitation with a pH level below 5.6, some researchers believe that it should be defined as low as 5.0. Using either definition, acid deposition has a far-reaching impact on both the U.S. and Canada.

In areas with unusually high concentrations of corrosive elements (pH of rainwater lower than 5.0), the designer should detail the façade for water run-off, specify concrete strengths and durabilities normally associated with architectural precast concrete, provide the required cover over reinforcement, avoid soft aggregates such as limestone and marble, and suggest more frequent washings of the building.

The flow of rainwater across the building's façade has a profound affect on weathering patterns because rain run-off redistributes particulate matter that has been deposited fairly uniformly on the external wall surfaces. This deposit takes place more rapidly on surfaces facing upward and also on surfaces with a coarse texture. The designer should attempt to anticipate and plan for water flow over the wall, tracing water flow to the final drainage point or to ground level, particularly where discontinuities exist. When run-off reaches a discontinuity the water may bead and drip free. This may increase or decrease the run-off concentration, affecting both the run-off's ability to carry suspended

Fig. 3.6.1 Hydrogen ion concentration as pH from measurements made at the Central Analytical Laboratory, 2005 — distribution of acid rain.

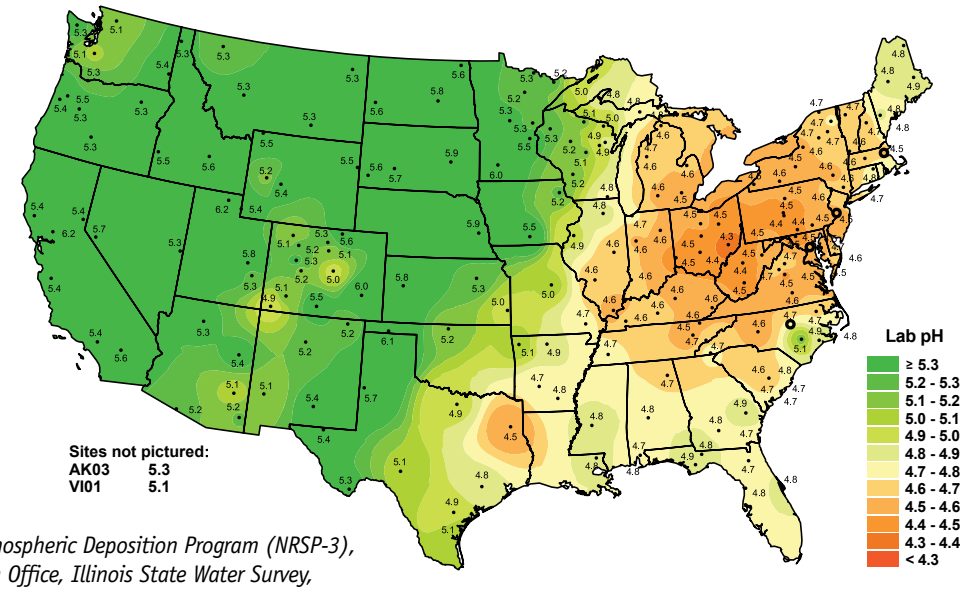

Source: National Atmospheric Deposition Program (NRSP-3), 2007. NADP Program Office, Illinois State Water Survey, 2204 Griffith Dr., Champaign, IL 61820.

dirt particles, and the subsequent drying behavior of the wall. Such changes of flow concentration may disfigure the building surfaces.

Rain is primarily a cleansing agent for building surfaces. However, at some stage the water will also pick up particulate matter already deposited on the walls and it becomes a soiling agent. The preferred lines of water flow must be arranged through shaping of surfaces and textures so that, at the point where water is expected to become a soiling agent, it will not detract from the finishes or forms of the building elements. Particulate matter will drop out of the run-off water when water flow velocity is decreased; for example, when the run-off is allowed to fan out. It may be necessary to have frequent details to throw water clear of the building, collect the water, or spread the water uniformly across sloped surfaces. Such details should be continuous to prevent differential rainwashing, or must terminate at bold vertical features, or maintain a clear distinction between washed and soiled areas. These differences can then, if required, be emphasized by the use of varying surface finishes.

The migration of run-off water is affected by:

1. The location and concentration of rain deposits.
2. The properties of water in contact with materials, especially surface tension.
3. The forces of wind and gravity.
4. The geometry, absorption, and texture of the building surface.
5. Drips.

The amount of rainwater, and the velocity and angle at which it falls is markedly different on each side of a building and at different heights. Therefore, it is not reasonable to expect equal weathering of all parts of the building. The influence of tall or massive buildings, projections, courts, or passages on prevailing winds can cause wind eddies to upset the natural flow of air and rain. This makes the effect of rainwater very difficult to predict. Also, a wall that receives a great deal of sunlight will dry out a lot faster and will be less likely to attract airborne particles.

The wettest portion of a building is typically the top corners of the windward face, followed by the top and side edges. The side wall, which is parallel to the wind direction, remains relatively dry. A wide face remains drier overall, particularly in its center region, relative to a narrow face. The taller the building and the higher the wind velocity, the relatively narrower the band of high rain impact. Increased wind speed also appears to cause greater wetting in the center of a façade. Corners may be subjected to 20 to 30 times more rain impact as compared with the central region of the building face.

A large roof overhang allows the wall surface to weather uniformly. Peaked roofs, cornices, or horizontal projections can substantially reduce the amount of rain that falls on a façade by reducing lateral acceleration at the wall-roof intersection. The horizontal projection should have a minimum projection of 12 in. (300 mm) to throw water off. In many cases, in order to be in scale with the building it will be much more. The projection must have a drip on the underside to prevent water running back across the soffit. This stops soffit staining, and also prevents random staining on the surface below.

During storms, driving rain can come from any direction, but the quantity of water available on a façade for washing is normally determined by its relationship to the prevailing wind and the intensity of rain from that direction. Wind movements around buildings are affected not only by major climatic factors but by local topography, adjacent buildings, and groups of trees. All these will affect the amount and position of driving rain hitting a building and the way water runs down the façade. The drops of driving rain are guided for the most part by the air currents around the building and external wall components. The pattern of these air currents is independent of building height. Small obstacles give rise to sudden changes in direction of the air current and the raindrops cannot follow these sudden changes. The mass forces carry them forward to the obstacle. On one- or two-story buildings, the driving rain reaches the lower parts of the walls. Dirt stain patterns do not usually occur on such low buildings.

Air currents against buildings taller than a couple of stories are, on the other hand, deflected so gently that the air has time to re-orient the raindrops. When the wind blows at a building, some of the air will rise to pass at an increased velocity over the top; the rest will form a horizontal vortex and spiral away around the ends (Fig. 3.6.2). Less than half the quantity of rain that should pass through a free air cross-section of the same size as the building is caught by an external wall. This applies regardless of the wind force. The rain mainly strikes the top parts of the wall. Only edge sections (corners) are reached by the driving rain and in

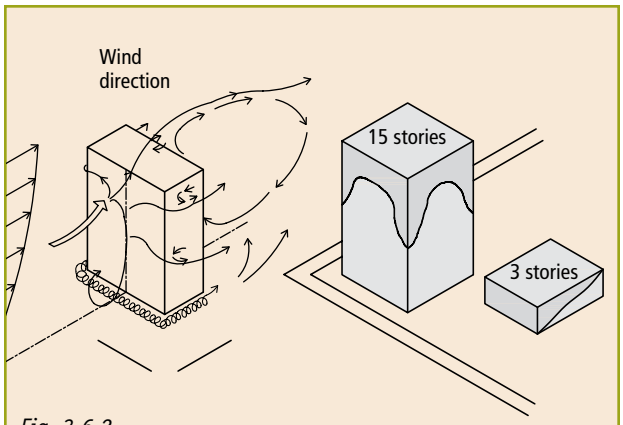

Fig. 3.6.2
Wind movement around building and rain wetting of façades.

the central sections the raindrops move almost completely parallel to the wall. As a result, water run-off very seldom reaches all the way down to the ground, except at corner areas and projecting components, unless the duration of the rain is quite long. Therefore, special care should be taken to ensure that water is not allowed to run down surfaces unless there is enough water to wash the surfaces completely. When the run-off water reaches the area of wall that is protected from driven rain by the horizontal vortex it will be absorbed into the surface causing a typical zigzag dirt line. The level at which the jagged line of dirt forms will be governed by a combination of the height of the vortex and the absorbency of the precast concrete. The height of the vortex above the ground is determined by the height of adjacent buildings or other obstructions over which the wind has passed. A typical weathering pattern caused by rain and prevailing wind is illustrated in Fig. 3.6.3. Parts of the building façade are clean in areas where it is washed by rain, even though the remainder of the building has become soiled.

Fig. 3.6.3

Rounded or splayed corners reduce wind speed at the edges of buildings and may be useful to avoid the heavy concentrations of driving rain that are typical of these locations. Also, continuity of water flow between surfaces is improved when corners between them have rounded instead of sharp edges. A joint, groove, or projection near a corner with a long return should be used to catch the rainwater and prevent partial dirt washing from water blown around the corner.

The raindrops that reach a wall surface are absorbed to different extents depending on absorption and moisture content of the wall material. Precast concrete normally has a medium to low water absorbency. Water run-off on concrete surfaces consists of a very thin layer, 0.01 in. (0.25 mm) thick, and only occurs if the absorption of the concrete is lower than a certain value. The run-off flows slowly (up to 3 ft/min. [0.9 m/min.]) and vertically down the wall with lateral winds having an insignificant influence. When the water reaches lower sections, which have been struck by less driving rain and are drier, it is absorbed. The dirt accompanying the water is deposited in new places, unevenly soiling the surface. Also, a façade with high absorption normally becomes wet rapidly and remains damp for a longer period than a façade with low absorption. Airborne dirt (soiling particles) adheres easily to high absorption concrete. It is desirable to break up large areas of concrete, extending over several stories, with horizontal features that either collect or throw off the water at intermediate positions. These features will reduce the amount of water on the surface, reduce the differences between panels at different levels on the façade, make the change from washed to unwashed into a gradation instead of a clearly visible line and by producing interest and shadows will make any changes less noticeable.

Fig. 3.6.4(a) & (b)Water flow over glass depositing dirt.

Surface tension causes droplets of water to coalesce on non-porous surfaces such as glass and metal and to drain in irregular streams. Glass areas cause build-up of water flow. Because glass is a non-absorbent material, the flow rate of water down its surface is fast, and there is little time lag in its throw-off. By contrast, rainwater flowing down an adjacent concrete wall surface will be slower (depending on the surface texture) and its throw-off will be less complete. As a result, there is a concentration of water at the bottom of each window—the very thing the designer must guard against if differential patterning is to be avoided. This flow must be dissipated, breaking up its concentration. Furthermore, there is always a tendency for water flow to be in greater volume at the edges of the glass (the smallest amount of wind tends to drive rain toward the edges of the glass). Figures 3.6.4(a) and (b) show a soiling pattern caused by water run-off carrying particulate matter down the mullion and over the precast concrete. In Fig. 3.6.4(a), an attempt to minimize staining resulted in grooves being cut under the mullions.

The water run-off on concrete surfaces has a tendency to divide into separate streams determined by microscopic irregularities or differences in absorption of the surface when the water layer thickness decreases below a critical value. This breakdown into irregular, separate streams takes place mainly on smooth or lightly textured surfaces but can also occur on surfaces with exposed aggregates. However, a uniformly distributed, broken flow is more likely to occur over heavily textured materials (Fig. 3.6.5). These streams recur at the same locations during most rainfalls and are reflected in the soiling pattern. The streams of water broaden out laterally when they meet horizontal or moderately sloping obstacles. They also follow surfaces facing downward (horizontal surfaces) in a similar manner. Consequently, the design of drips is extremely important. Surface tension allows flows to take place along the underside of horizontal surfaces. Therefore, horizontal ledges, returns, and bullnoses should have a drip groove in the underside to prevent water running back onto the façade and causing staining. The path followed by the water from the lowest points of

Fig. 3.6.5 Water flow over smooth versus rough texture.

Fig. 3.6.6 Volume of rain likely to hit wall surfaces.

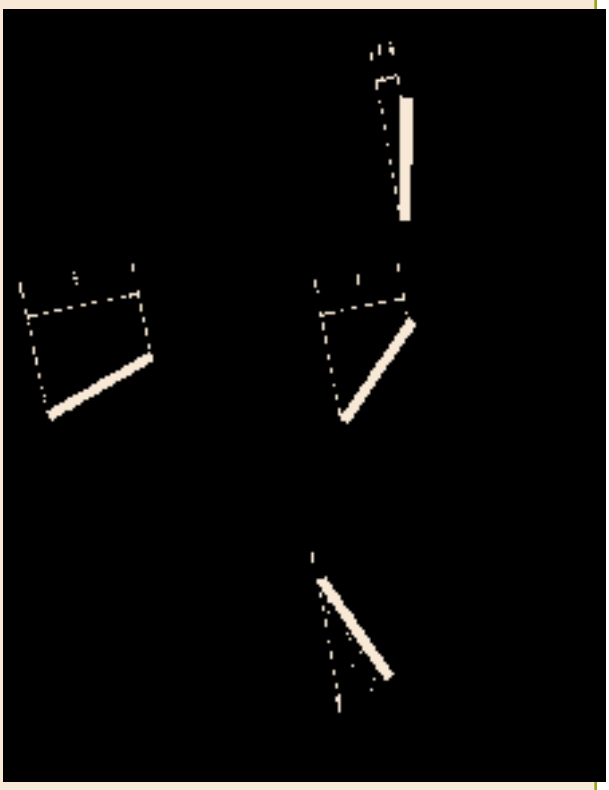

these drips should also be taken into consideration in the design.

A coarse texture often stains in a way that is not too objectionable. The naturally present surface contrasts are usually enhanced.

The vertical angle of a surface has a major influence on the quantity of pollutants it collects and how they are discharged during rain. Figure 3.6.6 shows the volume of rain assumed to hit a building surface depending on the orientation of the surface. For diagrammatic purposes, the angle of rainfall direction is assumed to be 10° from the vertical. However, the variability of rain under actual conditions makes all but a general prediction difficult. Vertical or near-vertical surfaces receive insufficient rainwater to be self-cleansing. Steep forward-sloping surfaces usually weather cleaner. Large areas may begin to collect dirt at the lower end unless the angle is steep. With heavy rain, the dirt on horizontal surfaces and surfaces that have little slope may be partially washed off, streaking the surfaces below. In the case of light rain or drizzle, the dirt may collect and slowly flow down other surfaces in the general direction of the water flow, resulting in pronounced, random streaking. Backward-sloping surfaces collect little or no rain but are likely to be subject to a partial, nonuniform water flow from above, which may carry dirt and cause serious streaking. Backward-sloping surfaces are often seen in shadow. In this case, the accumulation of dirt is not particularly noticeable if the dirt is acquired evenly without disfiguring streaks. The following guidelines are derived from the weathering of exposed surfaces:

- Avoid horizontal planes—they collect the most dirt and are the most exposed to rain.
- Use sloping rather than flat upper surfaces—the advantage of a sloping upper surface is that the dirty water is immediately drained away. It is best to adopt a steep slope and a limited height to encourage fast run-off of rain and complete washing. If there is a risk of an uneven staining pattern, then opt for a darker color and/or a complex surface texture, for example, deep grooves.
- Avoid run-off into the elements in the rain shadow.
- Avoid run-off from horizontal or gently sloping upper surfaces on vertical sections of walls. Investigate whether the combination of the two surfaces cannot be replaced by a slope. The pattern of the spandrel under the windows is influenced by this.
- Every inclined or vertical surface with underside edges must be provided with a well-profiled drip in order to prevent the rain running off into the rain-shadow area.

The façade geometry of buildings is usually responsible for local concentrations of run-off. Such concentrations lead to the characteristic marking patterns frequently observed on building surfaces: dirt accumulation, dirt washing, and white washing (Fig. 3.6.7).

Fig. 3.6.7 Characteristic marking patterns.

New buildings may show dirt washing at locations of concentrated run-off while their over-all surfaces are still quite clean. Later, the same areas may exhibit white washing (lighter, cleaner streaks) after adjacent surfaces have been darkened by dirt accumulation.

Adjacent precast concrete units should have faces aligned within accepted industry tolerances (see Section 4.6.3). Any discrepancy may pass undetected on a new building, but weathering will eventually emphasize the offset with uneven staining of adjacent units.

When mullions and other vertical elements meet a horizontal element, the configuration often causes a concentration of flow and uneven weathering. Vertical surfaces can be protected and weathering minimized by providing steeply sloping overhangs with drips. These tend to reduce dirt accumulation and the washing of dirt onto the vertical surfaces below.

The intersection of horizontal and vertical projecting elements almost always creates dirt streaks. Such streaks run back from the edge of exposed columns and below the ends of horizontal elements even when they are steeply sloped at the top surface. To avoid such streaks, the horizontal element should be stopped short of the column. This confines rain run-off to the horizontal element and permits unimpeded washing of the column. Channeling of the column faces also will help prevent water from running back along the edges.

Water flowing laterally or diagonally downward on a surface will concentrate where it encounters vertical projections or recesses. The secondary airflow due to wind is also important. It concentrates run-off at the outside corners of the building, at columns, and at inside corners of vertical projections. Surface tension contributes to this effect by preventing flow back from vertical edges of small elements such as window mullions, often concentrating the flow at the corners.

In areas where nearby buildings show the undesirable effects of weathering and the local atmosphere is laden with pollutants, it is recommended that consideration be given to the use of sealers to increase rain run-off, reduce surface absorption of the concrete, and facilitate cleaning of the surface (see Section 3.6.6).

Careful attention should be given to the effects of exterior details on the weathering pattern of the building. Appropriate design details help to avoid many of the more unsightly effects of dirt streaking and differential washing.

Thus, the principles the designer should consider to minimize the visual effects of water flow are:

- Provide steeply sloping surfaces to allow self cleaning, and limit the distance of water flow.
- For vertical surfaces, detail surface finishes that disperse rainwater flow over the surface (for example, exposed aggregate) or provide vertical striations that direct the flow more evenly.
- Avoid concentration of water flow.
- Prevent water flow over sheltered positions by detailing drip grooves to throw the water clear.

3.6.2 Surface Finish

Concrete surface finishes vary considerably in their ability to take up and release dirt under weathering conditions. They should therefore be chosen for their so-called "self-cleansing" properties. But the selection of color and texture may have an aesthetic significance greater than the effects of weathering. The economics of varying the surface finish from one part of the building to another should be investigated as the weathering characteristics will be different.

The surface of smooth precast concrete is hard and impervious and easily streaked by rain, unless there is enough water to form a complete film on the surface. Weathering patterns are determined by the shape and smoothness of the units and joints, which are particularly vulnerable. Any irregularity in a smooth surface will be exaggerated by weathering patterns. Non-repeating, irregular, and concentrated streams tend to form on smooth or lightly textured materials. Light-toned and smooth surfaces accentuate the contrast between washed and unwashed areas.

Textured finishes accumulate more dirt, but they can maintain a satisfactory appearance. The aggregate tends to break up and distribute water run-off more evenly, reducing the streaking that appears on smooth surfaces (Fig. 3.6.8). Textured finishes also have a slower drain-off because each stream is small. The irregularities and shadows on the surface also tend to mask discoloration. It is not reasonable, however, to expect an exposed-aggregate finish to deal with all problems of weathering. The way water moves on such a surface is different, but concentrated flows or their effects will still be visible and must be controlled.

Rounded aggregates are preferred because they tend to collect less dirt than angular aggregates with rough

Fig. 3.6.8 Streaking on smooth versus textured finishes. Photo: Bill Rothschild.

texture. However, dirt pickup is generally confined to the matrix. For this reason, as well as for architectural appearance, the area of exposed matrix between aggregate particles should be minimized. The smooth, nonporous surfaces of the aggregates allow less dirt to deposit and promote more run-off to increase washing of the surface. At the same time, a slightly recessed or a darker matrix helps to absorb and mask pollution deposition.

Extreme color differences between aggregates and matrix will create uniformity problems. For example, large exposed aggregates of light color provide heavily textured surfaces that may seem to be very dirty with time because the matrix becomes very dark and the high spots of the aggregates are washed clean. In some cases, uniformly colored light surfaces contrasted with uniformly dark-colored surfaces may be used to accentuate the depth of relief on a building face. Smooth units made with dark-colored sands will slowly become darker with age when subject to weathering because the surface film of cement paste erodes away, exposing the sand. Therefore, wide differences between the color of the cement and the sand should be avoided.

The use of appropriate colors and textured surfaces can help to mask the effect of dirt deposits. The overall darkening in tone that takes place is unlikely to be objectionable unless streaking occurs. Medium textured finishes may still allow water to run or be wind-driven into streams, causing irregular streaks. Vertical ribs or flutes that help the designer give expression to a fa-

Fig. 3.6.9
Arizona Public Service Administration Complex, Phoenix, Arizona; Architect: DFD Cornoyer-Hedrick formerly Comoyer-Hedrick Architects & Planners; Photo: DFD Comoyer Hedrick.

çade will also help to control the run-off and prevent it from spreading horizontally. As dirt collects in the hollows, it emphasizes the shadow and, therefore, the texture itself. The rib must not be too wide otherwise a soiled pattern may develop in the middle area of the rib's upper surface. If the ribs are terminated above the lower edges of the walls, streaking below the ribs may occur depending on the depth of projection and the wind force and direction. As water reaches the bottom edge of a vertical or inclined panel, surface-tension effects cause it to slow down before dripping clear and it tends to deposit any dirt it has been carrying. Horizontal ribs or flutes spread stains rather than prevent them and can be used to protect the underlying surface by deflecting the flow of water. Water flows on diagonal ribs create a weathering pattern difficult to predict.

3.6.3 Deposits from an Adjacent Surface or Material

A partial water flow may be stopped from running over backward slopes by water drips. If dirty water, thus directed, falls partially onto other surfaces the problem may be merely relocated. The effect of dirt washed onto precast concrete surfaces may be diminished by rough textured surfaces with reasonable dark color tones to minimize the visual appearance of the dirt. Alternatively, the dirty water may be directed off the building. An example of this is shown in Fig. 3.6.9. The three-story panels have spandrel areas below windows that project out from the building at each successive level.

Water flowing over copper, bronze, weathering steels, some silicone sealants, sheet metal flashing, or aluminum, which subsequently flows over concrete, mainly creates green, rust-brown, or black stains over a period of time, (see Section 5.2.3). Consideration should be given to using parapet flashing with a drip detail and to possibly protecting against corrosion. These types of discoloring are more difficult to remove than ordinary climatic dirt. Also, maintenance procedures such as window cleaning can produce dirt markings on precast concrete unless care is exercised.

3.6.4 Efflorescence on Precast Concrete

Efflorescence is a frequent issue that the architectural precaster has to address. Efflorescence often appears within the first year after the structure is completed—when the architect, owner, and contractor are most concerned with the appearance of the new structure. However, the length of time that lapses before efflorescence occurs may vary greatly; it may appear after

only one day, or within a few days of product stripping, and sometimes not until weeks, months, or (in rare cases) years have passed. Though generally harmless from a structural viewpoint, the initial appearance of efflorescence can be detrimental to the appearance of a finished structure, but should not cause concern. Recurrent efflorescence, on the other hand, indicates a chronic moisture problem, and efforts should be taken to prevent and eliminate it.

The phenomenon of efflorescence apparently does not follow a firm principle but frequently occurs at random. Sometimes no problems may be experienced with one batch of concrete while the next batch shows a strong tendency to develop efflorescence. Nevertheless, it must be recognized that, under certain conditions of construction and exposure, efflorescence is inherent and unavoidable.

While little attention is given to efflorescence on white or light-colored surfaces, the contrast on dark-colored concrete is obvious and attention-getting.

3.6.4.1 What is efflorescence

Efflorescence usually occurs due to the presence of soluble substances in the materials used to produce concrete. Water-soluble salts present in concrete materials as only a few tenths of 1% are sufficient to cause efflorescence when leached and concentrated at some point on the surface. The amount and character of deposits vary according to the nature of the soluble materials and the atmospheric conditions. The chemical components of efflorescent salts are usually alkali metal and alkaline earth sulfates, hydroxides, and carbonates. The most common salts found in efflorescence are sodium and potassium sulfate, sodium bicarbonate, and calcium hydroxide or carbonate. The sulfates and bicarbonate are readily soluble in water, while calcium carbonate is not.

At early ages, the hydrated cement in concrete contains a substantial amount (15% by volume of the cement paste) of calcium hydroxide as a normal product of the hydration reaction between cement and water. Some of the calcium hydroxide dissolves in the mixing water, migrates to the surface of the fresh concrete, and precipitates there. The solubility of the calcium hydroxide increases with decreasing temperature, and the greater the solubility, the greater the likelihood of efflorescence. It is not the water in the concrete that migrates to the surface with the calcium hydroxide; rather, the calcium hydroxide in aqueous solution moves through the capillary pores of the concrete to the surface, where it reacts with carbon dioxide in the air to form water-insoluble calcium carbonate, which then appears as a whitish deposit (primary efflorescence). Primary efflorescence can only occur if the concrete capillaries are filled to the top with water. Precipitation of the calcium carbonate reduces the local calcium hydroxide concentration at the concrete surface, thus creating a concentration difference in relation to the interior of the capillary system. New calcium hydroxide is then supplied to the surface from the interior concrete capillary system. Calcium hydroxide is much more soluble in water at cold temperatures than at warm temperatures, such deposits are more common in damp, winter months.

In a subsequent, slower reaction over a concrete age of one to three years, calcium carbonate can react with additional carbon dioxide and water to form calcium hydrogen carbonate (calcium bicarbonate), which is water-soluble. This type of efflorescence can be partially washed away by rain. The acid constituents of the atmosphere (for example, sulfur dioxide) can result in transformation of the calcium hydroxide deposits on the concrete surface to calcium sulfate. Efflorescence, therefore, disappears faster in areas with acid rain than in the those of marine and mountain climates.

Other causes for the migration of calcium hydroxide to the concrete surface include rainwater, which penetrates or comes in contact with the concrete, or water of condensation, which may occur within or on the concrete. Such water is initially free of dissolved calcium ions, but as a result of a concentration gradient, the calcium hydroxide migrates out of the concrete to the water on the surface, where it eventually reacts with carbon dioxide. Such efflorescence, which can occur during the continual curing of hardened concrete, is referred to as secondary efflorescence. Secondary efflorescence will not usually occur if the concrete surface has had time to carbonate to any appreciable depth.

No clear distinction can be made between primary and secondary efflorescence, particularly as the transition between the two is not clear.

Identification of efflorescence deposits is sometimes useful. X-ray diffraction analysis, petrographic analysis, and chemical analysis are techniques some commercial laboratories use to identify efflorescence deposits. In some instances, it is useful to know both the type of

salt present and its relative quantity. For example, very soluble salts such as alkali sulfates and bicarbonates indicate possible material problems, whereas relatively insoluble efflorescence deposits may indicate problems related to too much moisture moving into the concrete or unfavorable curing conditions.

Efflorescence may also occur on any concrete surface due to migration of salts from the ground up the exterior surface of foundation walls. In the western U.S., sodium sulfate in the soil may climb a few inches up walls and across horizontal surfaces. It may then enter the concrete a short distance and undergo volume changes that cause loss of concrete surface.

3.6.4.2 What causes efflorescence

A combination of circumstances causes most efflorescence. First, soluble substances must be in one or more of the concrete materials. An abundance of calcium hydroxide is always present in concrete, but the quantity of soluble alkali metals will vary depending on the cement source. Second, moisture must be present to dissolve the substances. Third, evaporation, hydrostatic, or osmotic pressure must cause the solution to move toward the surface. And fourth, the solution must evaporate to leave these substances behind as efflorescence. If any one of these conditions is eliminated, efflorescence will not occur.

The efflorescence tendency of most high-quality concrete decreases with increasing age and with rapid drying and carbonation of the surfaces. However, concrete that is constantly or frequently saturated with water can continue to develop efflorescence for years.

Many factors affecting the occurrence of efflorescence on concrete surfaces interact with one another. These factors are relative humidity, temperature, and air movement (these affect the rate of surface drying), and permeability and texture of the concrete surface. Some types of efflorescence occur most frequently when temperatures are low and humidity is high because calcium hydroxide has greater solubility at low temperatures. In the northern U.S., this happens most often in the early spring or fall when there are intermittent rains, and the temperatures are still only in the range of 30 to 50 °F (0 to 10 °C). These conditions rarely occur in some southern regions; consequently these regions rarely, if ever, have any problems with such efflorescence.

Several researchers have observed a correlation between weather variables and efflorescence. The research suggests that efflorescence may be related to climatological data on precipitation, wind, and temperature. Wet, cool, windy weather seems to induce efflorescence. For 246 U.S. weather stations, an efflorescence index was calculated for each month as the product of the mean normal precipitation (in.), the average wind speed (mph), and the reciprocal of the average, normal, daily mean temperature (°F). Those monthly values were then averaged for the year and are plotted in Fig. 3.6.10 with isopleths.

Fig. 3.6.10 The efflorescence index.

"Masonry's Latent Defect," by Clayford T. Grimm, *The Construction Specifier*, vol. 51, no. 11, October 1998, page 58.

Efflorescence is more prevalent where the efflorescence index is greater than 0.5. Efflorescence causes some concern at mid-continent of the United States and becomes progressively troublesome toward the east coast. There is less efflorescence from mid-continent to the west coast, except for the far northwest.

High evaporation rates always reduce the degree of efflorescence, whereas low evaporation rates need not necessarily result in high efflorescence levels. In the summer, even after long rainy periods, moisture evaporates so quickly that comparatively small amounts of salt are brought to the surface. Usually efflorescence is more common in the fall or early spring when a slower rate of evaporation allows a greater amount of salts or calcium hydroxide to migrate to the concrete surface.

Imagine fresh concrete as a material riddled with capillary pores that are filled with an aqueous solution of the water-soluble components of the cement—mainly

calcium hydroxide and alkali sulfates. As the concrete hardens, the calcium hydroxide located at the surface of the capillaries reacts with atmospheric carbon dioxide to form calcium carbonate. Due to the formation of calcium carbonate, the concentration of calcium hydroxide at the mouth of a capillary is lower than inside it. For this reason, calcium hydroxide is continuously diffused from the lower layers of the concrete to the surface. It is true that visible efflorescence can only occur if the capillaries in the concrete are wet throughout. Only then can the calcium hydroxide and alkali salts reach the surface. The capillaries are gradually blocked with calcium carbonate, and the whole process normally comes to a halt. However, if the surface of the concrete is covered with a film of condensation, the calcium hydroxide can spread over the entire surface area and react to form a layer of calcium carbonate, which is insoluble in water. In this case, efflorescence will be more severe than when no water film is present on the surface of the concrete and calcium carbonate is only found at the capillary surface.

Well designed and produced concretes contain capillary systems in which water not needed for hydration of the cement paste can make its way (by diffusion) into the atmosphere. The size of these capillary pores is of decisive importance with regard to the formation of efflorescence. The finer and more elaborately branched the capillary pore system is, the more intensively the diffusible water is held back by capillary forces and the drier the ambient air must be to induce the water to evaporate from the pores. Also, the smaller the capillary diameter, the more rapidly the outlets of the capillaries at the surface of the concrete are blocked by calcium carbonate from the reaction of the calcium hydroxide with carbon dioxide in the air. The formation of efflorescence is stopped as the concrete surface becomes denser and less permeable.

If the capillary pores in hardened concrete could be limited to a minimum, this would be a step forward in solving the efflorescence problem. When concrete is thoroughly hydrated, its pore structure changes and its permeability is decreased dramatically, so that, as a rule, it will not be affected by efflorescence.

Secondary efflorescence can appear on the surface of concrete during weathering, even if the concrete has cured properly. What is remarkable is that secondary efflorescence usually occurs for roughly as long as there is a marked increase in the strength of the concrete during exposure to moisture. It is therefore likely to be a consequence of further hydration of the cement. During this process, calcium hydroxide is deposited on the surface and then reacts with carbon dioxide. Secondary efflorescence appears to reach a maximum within a year. The maturity of the concrete, defined as the product of the curing temperature in degrees Celsius (°C) and curing time in hours (h), has been related to secondary efflorescence. At maturity values above 1300 (°C × h), efflorescence is usually minimal.

The more common causes of moderate amounts of secondary efflorescence do not lie in the transport processes from deeper layers of concrete to the surface, but are thought to be more closely related to localized conditions on the surface. This is backed up by the point that the efflorescence would otherwise have to be very pronounced since there is a much larger quantity of calcium hydroxide available in the concrete as a whole. When the surface of concrete is sandblasted, retarded, or acid-etched, the quantity of secondary efflorescence can be greater than it would have been for a densely formed or finished surface under the same environmental conditions.

The weathering away of a thin layer of secondary efflorescence in one to two years can be due to the slow formation of water-soluble calcium hydrogen carbonate from calcium carbonate. Once this occurs, it is easily washed away by rain. In areas with little rain (Arizona, for example), secondary efflorescence is particularly long-lasting. A great deal of rain will wash the calcium hydroxide from the surface of the concrete before it has a chance to react to form insoluble calcium carbonate. It is very rare for secondary efflorescence to reappear on well-compacted concrete.

3.6.4.3 Minimizing efflorescence

Because many factors influence the formation of efflorescence, it is difficult to predict if and when it will appear. This fact is evident in the lack of any accepted standard test method for measuring the efflorescence potential of concrete. Several experimental methods have been proposed, but none has been accepted as effectively predicting the performance of concrete in use.

Conditions that increase the penetration of water into the concrete must be avoided. A dense concrete that absorbs as little water as possible after curing is desirable.

In selecting materials for concrete, the soluble-salt content of all ingredients should be considered. To reduce or eliminate the potential for efflorescence:

1. **Reduce concrete permeability and use a concrete with a low water absorption of 5 to 6% by weight or 12 to 14% by volume.** These are the key factors that the precaster can influence to minimize efflorescence. Accomplishing these will require properly graded aggregates, a minimum cement content for stripping and service strength requirements (a cement-rich concrete mixture increases water absorption), a low water-cement ratio, good consolidation techniques, thorough curing, and possible use of efflorescence-controlling agents.

   By reducing the amount of available water below (or to) the amount required for hydration, voids and capillaries in the matrix are reduced. The reduction of total water content by means of a water-reducing admixture should reduce the total porosity slightly, but there are no adequate data to demonstrate that permeability is reduced materially. However, decreased permeability through the use of high-range water reducers at equivalent water-cement ratios has been reported. Reducing or limiting the water-cement ratio and total water content to the feasible minimum will greatly aid in reducing the propensity for efflorescence.

   The compound composition of cement of a given fineness affects permeability of a paste of a given water-cement ratio at a given age only insofar as it influences the rate of hydration. The greater the degree of hydration, the lower the concrete permeability. However, for a given water-cement ratio, coarse cements tended to produce pastes that are more porous than finer cements.

   The permeability of concrete depends on the permeability of the paste as well as that of the aggregate, and on the relative proportions of each. It also depends greatly on placing, finishing, particularly consolidation, and curing procedures. Permeability of concrete to liquid water or water vapor is not a simple function of its porosity, but depends also on the size, distribution, and continuity of the pores in both the cement paste and aggregate. The pores in cement paste are of two kinds. Gel pores, constituting about 28% of the paste volume, are interstitial spaces between the gel particles. They are very small (between 1.5 and 3.0 nm in diameter). Capillary pores are larger (of the order of 1 μm) and are irregularly distributed throughout the cement paste. Because capillary pores represent the remains of originally water-filled spaces, their volume can vary between 0 and 40%, depending on the original water-cement ratio and the degree of hydration of the concrete. As hydration progresses, the permeability decreases. Thus, normally, the higher the strength of a given paste or concrete, or the longer it has cured, the lower it's permeability.

   Air entrainment might be expected to increase the permeability of concrete. However, because air entrainment reduces the mixing water requirement and bleeding, and entrained air voids interrupt the continuity of capillary pores, the overall effect of air entrainment will usually be to reduce permeability.

2. **Use a low-alkali cement.** Portland cements vary appreciably in their total (acid soluble) alkali metal content (typically 0.02 to 0.90% by weight of cement), dependent on the raw materials used and the temperature of the kiln. The total alkali content should be limited to less than 0.35% as Na_2O and the water-soluble alkali content to less than 0.13% as Na_2O. These severe limitations on alkali content can be met only by a few cements, other than portland blast-furnace slag cement. Modern cement manufacturing methods, which attempt to conserve energy and reduce kiln emissions, have led to increased concentrations of alkali metal sulfates, sometimes as much as 1.5% by weight, usually present as soluble sulfates such as K_2SO_4 or $Ca_2K_2(SO_4)_3$. It is also suspected that the sulfate content may be as significant as the alkali content in contributing to efflorescence.

3. **Use sand that meets the requirements of ASTM C 33, C 144, or CSA A 23.1.** Never use unwashed sand containing soluble alkali sulfates. Water-soluble salts, generally chloride and sulfates, may be deposited in or on sand and gravel deposits by evaporation of groundwater, or by evaporation of sea or salt lake water on beaches. Sands may also be contaminated from soil runoff, plant life, and decomposed organic compounds. These salt-contaminated materials may cause efflorescence and should be avoided.

   A feature of limestone aggregates is their tendency to exude self-produced efflorescence when used for exposed-aggregate finishes. On white or

near-white aggregates this is of little consequence, and on white finishes it might, on occasion, even bring some slight improvement to the final result. On dark surfaces, however, the white film will not only show, but will significantly dull the original color of the aggregate. After cleaning the surface of efflorescence, treatment with a clear sealer can normally be relied on to prevent a recurrence.

4. **Use clean mixing water.** The mixing water should be free from harmful amounts of acids, alkalis, organic material, minerals, and salts. Do not use drinking water that contains quantities of dissolved minerals and salts sufficient to cause efflorescence. Some city drinking-water supplies may require treatment as they may have as much as 215 ppm of sodium, 20 ppm of potassium, 550 ppm of bicarbonate, 120 ppm of sulfate, and 280 ppm of chloride. Do not use seawater.

5. **Additives.** Additives that reliably prevent efflorescence when added to the concrete are the dream of every precaster. However, no panacea for the prevention of efflorescence has been found.

   Both fly ash and silica fume consume large quantities of calcium hydroxide (although they are not generally used in architectural precast concrete because of color problems), as does metakaolin. The reaction of fly ash with calcium hydroxide is rather slow, so that significant reductions in calcium hydroxide are seldom seen before 30 to 60 days. With silica fume additions greater than 20%, it is possible to almost completely eliminate calcium hydroxide (although this is not practical). Addition of 5 to 10% silica fume or metakaolin can produce large decreases in permeability and alkali content in the pore structure. Trial mixtures should be used to evaluate the effect of these materials on air content and other mixture properties and most importantly on color and color uniformity.

   Using an integral water-repellent or dampproofer, such as butyl stearate, may reduce the rate of penetration of water in its liquid state through the concrete. The butyl stearate is added as an emulsion at a rate of 1% stearate by weight of cement. Such additives function by blocking capillary action, providing an internal barrier to the transmission of water through the matrix. They have performed very well in some instances, particularly when the concrete contains paste with relatively high porosity, but only marginally in others; their major shortfall is generally the limited amount of time they provide protection. When considering the use of an efflorescence-controlling agent, the precaster should run trial mixtures to determine the effect a given product may have upon air content and its compatibility with other admixtures that may be in the mixture.

6. **Other factors to consider.** Pigments have little or no effect on efflorescence. Pigments are water insoluble and do not contain noticeable amounts of water-soluble salts. Pigments may appear to aggravate any efflorescence problem by making it more visible. Also, efflorescence deposited on the surface may mask the true color and give the appearance of pigment fading, even though the pigment itself has not changed.

It is important to prevent inadequate hydration of cementitious materials caused by cold temperatures or premature drying of the concrete during curing. Inadequate hydration will prevent the occurrence of primary efflorescence, but increase the likelihood of secondary efflorescence.

3.6.5 Design of Concrete for Weathering

The assessment of concrete mixtures with respect to appearance, strength, and durability is discussed in Section 3.2.6. This section deals with weathering, not as it affects structural durability, but with special emphasis on the visual results, particularly staining of the concrete.

It is apparent that certain concrete surfaces weather better than others when in the same environment. Concrete qualities will influence the degree to which staining of concrete surfaces can be predicted and limited, and the results of later cleaning of those surfaces.

The duration of partially wet conditions and the penetration of water, dirt, acidic rainwater, carbon dioxide, and sulfur dioxide are directly related to the absorption of the concrete surface. This absorption and penetration also create difficulties in cleaning such surfaces to restore them to the original appearance.

Low absorption for the surface concrete demands a high density of concrete and is primarily influenced by the mixture proportions.

Proportioning concrete for optimum durability and

weathering is dependent on the durability of the individual ingredients, as well as the density of the entire mixture. Concrete should be designed and/or evaluated for each individual project with respect to strength, absorption, and resistance to freezing and thawing, where such environments exist.

Optimum quality of concrete for durability and weather staining should be based on the a low water-cement ratio and durable aggregates. Water should be limited to a minimum as excess water will affect strength, density, and absorption. Aggregates should always be checked for potential alkali reactivity. It is recommended that aggregates that are potentially alkali reactive should not be used for exterior concrete surfaces. This requires a petrographic examination of the aggregate by qualified personnel according to ASTM C 295, *Standard Practice for Petrographic Examination of Aggregates for Concrete*.

A water absorption test of the proposed facing mixtures may provide an early indication of predictable weather staining (rather than durability). For the concrete strengths normally specified for architectural precast concrete (5000 psi [34.5MPa] at 28 days), a reasonable water absorption should not be a problem.

Water absorption is an indication of concrete density. Dense concrete (highly impermeable) is less susceptible to the effects of wetting/drying and, therefore, will absorb less dirt in a polluted environment. Based upon the density of normalweight concrete (150 lb/ft^3 [2400 kg/m^3]), the water absorption of the proposed face mixture should not exceed 6% by weight. Alternatively, absorption expressed by volume should not exceed 14%.

Laboratory freezing and thawing tests have been conducted to evaluate the durability of concrete under severe climatic conditions. These tests can be made on prismatic samples prepared from laboratory trial mixtures or even from cores cut from the face of finished production units. Such tests, however, take several months to complete. The verticality of wall units seldom allow concrete to reach the critical moisture saturation point (above 90%) on which such tests are based. However, where horizontal areas allow water or snow to accumulate or where ground-level panels may be subject to splashing by deicing salts and to freezing conditions at moisture contents above critical saturation, an air-entraining admixture should be specified. In addition, it is probably a prudent policy to have air-entrained concrete in all precast concrete exposed to freezing and thawing cycles. Possible exceptions to this are applications that require very high concrete strengths.

Equivalent evaluations can be obtained more rapidly by conducting "air void studies" (amount and character of entrained air in cores taken from the production unit) in accordance with ASTM C 457, *Recommended Practice for Microscopical Determination of Air-Void Content and Parameters of the Air-Void System in Hardened Concrete*.

3.6.6 Surface Coatings and Sealers

Clear surface coatings or sealers may be considered for the possible improvement of concrete's weathering characteristics. The quality of concrete normally specified for architectural precast concrete, even with the minimum practical thickness, is waterproof.

Sealers may be applied for the following reasons:

1. The prime justification for their use is the potential improvement of weathering qualities in urban or industrial areas. A sealer may be used to reduce attack of the concrete surface by airborne pollutants.
2. To facilitate cleaning of the surface if it becomes soiled or to resist impregnation of graffiti.
3. To prevent changes in appearance, particularly darkening of surfaces that are wetted, by making them water repellent. Also, uneven drying is caused by untreated concrete absorbing moisture at different rates over its surface. The surface will then dry unevenly, leaving a patchy appearance. Sealers keep the moisture at the surface. Drying is sped up and the surface retains its natural appearance.
4. To reduce efflorescence, particularly with a gray or dark cement matrix. The use of a concrete sealer will reduce the absorption of moisture into the surface, thereby minimizing or eliminating the wet-dry cycle and the subsequent migration of water and salts to the surface.
5. To reduce the incidence of concrete surface leaching, which may be a factor in the etching of the glass, aluminum, and other lime-susceptible construction materials. However, a sealer is not a substitute for proper design for water run-off.
6. To reduce the tendency of soiling in the yard, in transportation, and on the building. Special sealers (often with short-term effect) that will not change

the appearance of the units are used by some precasters to protect the units during yard storage, particularly where dirty atmospheric conditions exist.

7. To brighten aggregates and develop color tones that would otherwise be subdued.

The effectiveness of sealers in any of the preceding applications is dependent on the properties of the specific sealers. Some problems that have occurred with certain sealers are:

1. Appearance changes vary with the age of the precast concrete unit being treated. If a methyl methacrylate resin sealer with a high solids content is applied, the unit will take on a glossy or wet look. Some sealers may create a blotchy appearance if applied before the units are fully cured and dried, while others may lose effectiveness if sealers are applied too soon after unit fabrication. Sealers may also accentuate a patched area of different density. If it is necessary to remove sealers, use a solvent or wire brush, or grind or lightly sandblast the surfaces.
2. Certain sealers, such as some silicones, have been found to attract airborne hydrocarbons.
3. Sealers will often interfere with patching of the precast concrete surface or with adhesion of joint sealants. Some methyl methacrylate resin sealers inadvertently sprayed in the joints may peel away from the concrete surface leaving a void between sealant and concrete, while silicone water repellents in the joints may prevent adhesion of joint sealant to the concrete surface. Therefore, the sealer/sealant compatibility should be verified. Application of sealers should, therefore, be delayed until all repairs, cleaning, and sealant applications are completed.
4. The possibility of severe and permanent discoloration of the concrete surface to various shades of yellow, brown, or gray, or of peeling varies considerably between types and sources of sealers. Moisture permeability (breathing) of the sealer is a requirement to prevent blistering and peeling of the sealers. The sealer must make the concrete surface less water absorbent while allowing the outward transmission of water vapor, permitting the surface to breathe.
5. Proper application by following the sealer manufacturer's instructions depends on qualified operators and possible expensive pretreatment of the precast concrete units. The application limitations of sealers with respect to timing, ambient temperatures, moisture content of the concrete, and method and rate of application should be fully investigated before choosing a particular type of sealer or supplier.
6. Uncertain life expectancy, possibly causing a maintenance expense through resealing.

The use of sealers on precast concrete in locations having little or no air pollution or in dry climates is not recommended due to the additional cost, recurring periodic maintenance applications, and uncertain results of the sealer application.

A careful evaluation should be made before deciding on the type of sealer. This should include consultation with local precasters. Suggested sealers should be tested on reasonably sized samples with varying ages. The performance and affect on overall wall appearance should be monitored over a suitable period of time or be based on prior experience under similar exposure conditions. Sealers should be guaranteed by the supplier or applicator not to stain, soil, darken, or discolor the precast concrete finish. Also, some clear coatings (sealers) may cause sealants to stain the concrete or affect the bond of the joint sealant. The manufacturers of both joint sealant and sealer should be consulted regarding compatibility prior to application or the materials should be tested before application.

The type of solvent used in sealers, as well as the solids content, can affect the resulting color of the concrete surface. Thus, neither the type nor source of sealer should be changed during the project. Generally, sealers having higher solids contents tend to produce darker surfaces with glossy effects. The amount of color change depends primarily on the types of material in the sealer and their concentration, as well as the porosity of the concrete surface. The active ingredient of the sealer must be chemical-resistant to the alkaline environment of the concrete. Also, the sealer should dry to a tack-free finish to prevent a build-up of airborne contaminants that results in surface staining.

The sealers should be evaluated on how well they penetrate concrete surfaces that vary in absorption and texture. The penetrating sealers, generally silanes or siloxanes, develop their water repellent ability by penetrating the surface to depths of up to $^1/_4$ in. (6

mm), reacting with the cementitious materials in the concrete and making the concrete hydrophobic, but they do not have crack bridging capabilities. Some water repellents seal cracks by rendering the crack sides water repellent. The penetrating ability of the sealer system depends on the molecular size of the active ingredient, the viscosity of the system, and the solvent-carrying system.

Silane products based on monomeric alkylalkoxysiloxane (AS) have an extremely small molecule that provides excellent penetrating power. However, while the active substance is being formed, the relatively volatile silane can evaporate. The rate of evaporation increases as the drying conditions increase and as high concentrations of active ingredient are used (typically 20 to 40% silane).

Silane products based on oligomeric alkylalkoxysiloxane (OAS) also have an extremely small molecular structure, but they have practically no vapor pressure under application conditions. This means that they do not evaporate readily and can remain in capillaries until conditions are favorable. They can, therefore, be used at much lower levels (5 to 10%) of active ingredients.

While generally more expensive than other types of sealers, silane sealers are recommended and are typically longer lasting and less subject to deterioration from ultraviolet light exposure. Because appearance or characteristics of the surface is generally unaffected by application of these sealers, it is usually difficult to detect where they have been applied.

Surface sealers consisting mainly of the methyl methacrylate form of acrylic resins, having a low viscosity and high solids content also produce durable finishes but usually result in glossy surfaces. A combination of a base coat application of a penetrating sealer with a topcoat application of a methacrylate-based sealer may be the most effective.

In most cases, except for the silane or siloxane sealers, it may be necessary to adequately roughen an as-cast surface in order to obtain good adhesion of the coating. One way is to lightly sandblast the surface to be coated.

Surface coatings should not be applied until joints are caulked and all repairs and cleaning have been completed. In cases where the precast concrete units have been coated at the manufacturing plant and additional cleaning is required, it may be necessary to recoat those particular units. If panels are only recoated in spots, this could lead to inconsistencies in color.

Sealers should be applied in accordance with the manufacturer's written recommendations. Silanes and siloxanes are best applied to slightly damp surfaces. Generally, low-pressure, 15 to 30 psi (0.1 to 0.2 MPa), airless spray equipment should be used to apply the sealer. This results in a uniform application while avoiding excessive sealer rundown. Two coats are usually required to provide a uniform coating, because the first coating is absorbed into the concrete. The second coat does not penetrate as much and provides a more uniform surface color. Care should be taken to keep the sealer off glass or metal surfaces, unless testing shows no detrimental effect.

Graffiti repellents: Anti-graffiti coatings are either permanent or sacrificial and should not be confused with water repellent materials mentioned previously. Successful coatings tend to be slick or shiny. They offer no "tooth" for graffiti materials to cling. The coatings also tend to retard the wall's ability to breathe. Therefore, their use should be limited to those areas subject to graffiti—generally within about 8 ft (2.4 m) of grade. These coatings may change the color of the precast concrete by altering the refractive qualities of its surface; thus, they may become a design consideration. ASTM D 6578 *Practice for Determination of Graffiti Resistance* provides a protocol for evaluating coatings for graffiti resistance. The tests are performed on smooth surfaces. While the coating may have a certain cleanability level, the roughness of the surface would affect the ability to adequately rub the graffiti completely over the surface. The graffiti in the texture created by the substrate may be difficult to remove unless the proper tools and procedures are used.

Aliphatic urethanes are considered the best anti-graffiti coatings because of their resistance to solvents, yellowing, and abrasion. Solvents such as mineral spirits or methyl ethyl ketone can remove most graffiti from an aliphatic polyurethane without compromising the urethane coating. Acrylics, epoxies, silanes, and siloxanes are also used to make graffiti removal easier; however, acrylics dissolve with the solvent and epoxies tend to yellow or discolor. Silanes and siloxanes may not resist certain graffiti materials as well as the urethanes, but they do maintain a high breathability at the surface while resisting penetration of graffiti materials into the pores of the concrete.

3.6.7 Maintenance and Cleaning

Precast concrete units require little maintenance to preserve their original appearance. By following a simple program of inspection and maintenance, precast concrete can easily achieve the design service life of a building. To ensure proper performance or appearance, it is recommended that visual inspections be carried out yearly. Attention should be given to the caulked joints, surface appearance, and connections, if visible. Minor problems discovered and addressed in a timely manner will prevent expensive future repairs.

There are specific items that require periodic attention:

1. Window cleaning—clean every 90 to 180 days (based on dirt accumulation effects of the environmental pollution).
2. Dirt removal—the precast concrete façade may be power-washed as necessary (based on the effects of the environmental pollution). Buildup of dirt is usually a gradual process, and a periodic flushing with plain water may be an adequate maintenance program.
3. Joint sealants—check all joint sealants for deterioration and repair, as required. Typical maintenance issues are water leakage through the joint, visible separation of the sealant from the concrete, and cracking or tearing of the sealant. Sealants generally require re-caulking only every 15 to 20 years.

   Periodic evaluation of a building façade can help detect sealant deterioration before joints have failed and let water into the building. Building owners should keep accurate records of when their exterior sealants were installed and the average useful service life of the sealant. Once the sealant has reached 75 percent of its useful life, periodic review of the sealants should be conducted. In most cases, the initial evaluation could be done from the ground and the roof. Once the sealants have reached the average useful service life, a more extensive evaluation should be performed, including the use of a swing stage to adequately observe the building sealant joints.
4. Sealer—if methyl methacrylate sealer was applied, it should be re-applied every 4 to 5 years or as specified by the manufacturer; if penetrating silane or siloxane sealer was applied, it may not be necessary to recoat. If desired to recoat, the minimum time would be 7 to 10 years.

Precautions should be taken to avoid damaging or staining precast concrete units by:

1. Ensuring access equipment does not scratch or chip precast concrete surfaces.
2. Ensuring window cleaning solution (run-off) is cleaned from precast concrete units to prevent staining.

Removing stains from old concrete sometimes leaves the area much lighter in color than the surrounding concrete because surface dirt has been removed along with the stain or because the surface may have become slightly bleached. If at all possible, cleaning of the precast concrete should be done when the temperature and humidity allow rapid drying. Slow drying increases the possibility of efflorescence and discoloration. There is no single prescription for the cleaning restoration of architectural precast concrete as each building is exposed to a unique set of ambient conditions.

Because efflorescence often occurs during or immediately following construction, the first impulse is to immediately wash it off with water or an acid cleaning solution. This is not advisable, particularly in cool or damp weather when the primary result of such action will be to introduce more water into the concrete. The water will wash some of the alkali salts from the surface but will also dissolve and carry the salts back into the concrete, thus causing a reoccurrence of the efflorescence.

If it is possible to wait for one to two years before doing anything to the building, 95% of the time, the efflorescing salts will work themselves to the surface; the problem may solve itself by normal weathering. The water-soluble alkali salts will gradually weather away. Heavy calcium carbonate efflorescence, although less common, is extremely difficult to remove as it forms a hard, white crust. After weathering to calcium hydrogen carbonate, it may be easily removed, otherwise acidic cleaners may be necessary.

It is often helpful to determine the type of efflorescent salt, dirt, or stain so that a cleaning solution can be found that readily dissolves it without adversely affecting the surface finish.

Before cleaning precast concrete, a small (at least [3 x 3 ft (0.9 x 0.9 m)]), inconspicuous area should be cleaned and checked to be certain there are no adverse effects on the concrete surface finish or adjacent corrodible materials such as glass, metal, or wood, before proceeding with the cleaning. A sprayed-on, strip-off

masking can be used to protect glass and aluminum frames. The effectiveness of the cleaning method on the sample area should not be judged until the surface has dried for at least one week.

The key to successful cleaning is recognizing the advantages and limitations of each technique and designing a cleaning program around them (see ASTM E 1857, *Guide for Selection of Cleaning Techniques for Masonry, Concrete, and Stucco Surfaces*). A suggested order for testing appropriate cleaning procedures for removal of dirt, stains, and efflorescence from precast concrete (beginning with the least damaging) is:

1. Dry scrubbing with a stiff nylon fiber brush, particularly if the surface is brushed shortly after the appearance of dirt or efflorescence.
2. Wetting the surface with water and vigorous scrubbing of the finish with a stiff fiber brush followed by thorough rinsing of the surface with clean water. Low-pressure water, 50 to 200 psi (0.3 to 1.4 MPa); spraying (water misting); high-pressure water, 400 to 800 psi (2.8 to 5.5 MPa); or steam cleaning, 10 to 80 psi (0.07 to 0.55 MPa) may also be tried to remove dirt. Steam cleaning is also done in conjunction with chemical cleaning. Disposal of run-off water from washing needs to consider environmental compliance requirements.
3. Chemical cleaning compounds such as detergents, muriatic or phosphoric acid, or other commercial cleaners used in accordance with the manufacturer's recommendation. If possible, a technical representative of the product manufacturer should be present for the initial test application to ensure its proper use. Consideration should be given to the chemical's effect on the concrete surface finish and adjacent materials.

   Areas to be cleaned chemically should be thoroughly saturated with clean water prior to application of the cleaning material to prevent the chemicals from being absorbed deeply into the surface of the concrete. Surfaces should also be thoroughly rinsed with clean water after application so that no trace of chemicals remain in the surface layers of the concrete. Cleaning solutions should not be allowed to dry on the concrete finish. Residual salts can flake or spall the surface or leave difficult stains. Misapplication of hydrochloric acid can lead to corrosion of adjacent or embedded metals that have shallow cover. Care should be taken to protect all corrodible materials, glass, or exposed parts of the building during acid washing.

   Care should be taken to use dilute solutions of acid to prevent surface etching that may reveal the aggregate and slightly change surface color and texture of the precast concrete, affecting the appearance of the finish. The entire precast concrete façade should be treated to avoid discoloration or a mottled effect. Application should be to small areas of not more than 4 ft^2 (0.4 m^2) at a time, with a delay of about five minutes before scouring off the deposit with a stiff bristle brush. Any of several diluted solutions of acids are effective ways to remove dirt, stains, and efflorescence.

   a. 1 part hydrochloric acid in 9 to 19 parts water
   b. 1 part phosphoric acid in 9 parts water
   c. 1 part phosphoric acid plus 1 part acetic acid (vinegar) in 19 parts water
   d. 1 part acetic acid in 5 parts water

   Hydrochloric (muriatic) acid may leave a yellow stain on white concrete. Therefore phosphoric or acetic acid should be used to clean white concrete.

   Rubber gloves, glasses, and other protective clothing must be worn by workers using acid solutions or strong detergents. Materials used for chemical cleaning can be highly corrosive and frequently toxic. All precautions on labels should be observed because these cleaning agents can affect eyes, skin, and breathing. Materials that can produce noxious or flammable fumes should not be used in confined spaces unless adequate ventilation can be provided.
4. Dry or wet abrasive blasting using sand or other abrasives may be considered if this method was originally used in exposing the surface of the unit. Excessive abrasive blasting may change the color and texture of the finished unit and must be avoided. An experienced subcontractor or a precaster should be engaged for sandblasting. Abrasive blasting with industrial baking soda will not affect the concrete surface. (Any residue on the surface must not be removed by water as efflorescent salts may be dissolved and carried into concrete causing additional efflorescence.) Residues should be blown, vacuumed, or brushed from the surface.

Stone veneer–faced precast concrete units should be

cleaned with stiff bristle, stainless steel, or bronze wire brushes, a mild soap powder or detergent, and clean water using low or high pressure depending on stone type, if necessary. Acid or other strong chemicals that might damage or stain the stone veneer should not be used. Information should be obtained from stone suppliers on methods of removing oil, rust, and dirt stains from the stone.

Mortar stains may be removed from brick-faced panels by thoroughly wetting the panel and scrubbing with a stiff bristle brush and a masonry cleaning solution. A prepared cleaning compound is recommended; however, on red brick, a weak solution of muriatic acid and water (not to exceed a 10% muriatic acid solution) may be used. Acid should be flushed off the panel with large amounts of clean water (using a pressure washer) within 5 to 10 minutes of application. Brick should be cleaned in accordance with the brick manufacturer's recommendations, possibly using proprietary cleaners rather than acid to prevent green or yellow vanadium stains and brown manganese stains.

Following the application of the cleaning solution, the panel should be rinsed thoroughly with clean water. Low pressure using a 30 to 50 psi (0.2 to 0.3 MPa) washer or high-pressure water cleaning techniques may also be used to remove mortar stains except on sand finished brick.

Unglazed tile or terra cotta surfaces should be cleaned with a 5% solution of sulfamic acid for gray or white joints, and a more dilute (2%) solution for colored joints. The surface should be thoroughly rinsed with clean water both before and after cleaning. Glazed tile manufacturers generally do not recommend the use of acid or abrasive powders for cleaning purposes.

For information on removing specific stains from concrete, reference should be made to *Removing Stains And Cleaning Concrete Surfaces*, IS 214, published by the Portland Cement Association, Skokie, IL.

Park Tower,
Chicago, Illinois;
Architect: Lucien Lagrange & Associates Ltd., Chicago; HKS Inc., Dallas.

4.1 DESIGN AND CONSTRUCTION RESPONSIBILITY

4.1.1 General

Design and construction of a structure is a complex process. Clearly defining the scope of work and the responsibilities of the involved parties by means of the contract documents is critical to achieving the desired result. This section provides a guide for all parties involved in a precast concrete project and defines the responsibilities of each party. These responsibilities and relationships between the parties are defined in the contract documents for a particular project.

A successful precast concrete project requires teamwork, close cooperation and coordination between all of the participants, including the owner, architect, engineer of record (EOR), precast concrete manufacturer, erector, general contractor (GC)/construction manager (CM), and all other affected trades. The scope of the precast concrete work and the responsibilities of each party (typically defined by the contract documents) should be established at an early stage in the development of a project to achieve the desired quality and keep the project on schedule (see Table 4.1.1). During construction, each party is responsible for communicating with all other parties through the GC/CM or architect. This helps to prevent misunderstandings and confusion. When authority and responsibility roles are clearly defined by the contract documents, problems and conflicts are avoided. Local practices regarding the assignment and acceptance of responsibility in design and construction can vary.

One of the basic principles of the construction industry is that responsibility and authority should go hand in hand. Another principle is that every party should be responsible for its own work. These principles are frequently not followed in practice. There have been cases where owners have sued architects or engineers for approving non-conforming work without giving them authority to monitor the work as it progressed. Safety enforcement agencies (OSHA) and plaintiffs' lawyers have charged engineers or architects with the responsibility for construction accidents contrary to language and responsibilities listed in the contract documents. These last two situations typically are cases of responsibility without authority, although there could be instances where a design team's work or direction can affect jobsite safety. If the design team is involved with construction-management functions, they could be making decisions affecting worker safety as well as quality of construction. When agents of the owner give instructions directly to the construction workforce regarding how work is to be performed, they step over the line into the contractor's area of responsibility.

The increased complexity of structures today makes it essential to have design input from the subcontractors. This input, whether submitted as value engineering proposals, in response to performance requirements, or simply offered as design alternatives, plays a legitimate role in construction. For example, a precast concrete subcontractor may propose alternatives that improve the efficiency of the fabrication or erection operation. In approving the alternatives, the design team retains responsibility for properly interfacing with other materials in contact with or adjacent to the precast concrete elements.

The EOR always has to take overall responsibility for the structural design of the completed structure. However, certain aspects of the design are often delegated to specialty engineers working for the material suppliers or subcontractors. When any of this delegated structural design work for a portion of the structure involves engineering, the design work should be reviewed and approved by the EOR registered in the same state as the project or as required by the local jurisdiction. The EOR then accepts responsibility for the overall structural design. Additionally, local regulatory authorities should be consulted for their specific requirements. Contract documents typically require the structural design be the responsibility of a professional engineer, regardless of conflicts with other governmental requirements.

4.1.2 Responsibilities of the Architect

The architect develops the project design concept, establishes overall structure geometry, selects the cladding material for appearance and function, provides details and tolerances for proper material interfacing

Table 4.1.1. Design Responsibilities

Contract Information Supplied by Design Team	Responsibility of the Precaster
OPTION I	
Provide complete drawings and specifications detailing all aesthetic, functional, and structural requirements including design criteria, plus dimensions.	The precaster should make shop drawings (erection and production drawings), as required, with details as shown by the designer. Modifications may be suggested that, in precaster's estimation, would improve the economics, structural soundness, or performance of the precast concrete installation. The precaster should obtain specific approval for such modifications. Full responsibility for the precast concrete design, including such modifications, remains with the designer. Alternative proposals from a precaster should match the required quality and remain within the parameters established for the project. It is particularly advisable to give favorable consideration to such proposals if the modifications are suggested so as to conform to the precaster's normal and proven procedures.
OPTION II	
Detail all aesthetic and functional requirements but specify only the required structural performance of the precast concrete units. Specified performance should include all limiting combinations of loads together with their points of application. This information should be supplied in such a way that all details of the unit can be designed without reference to the behavior of other parts of the structure. The division of responsibility for the design should be clearly stated in the contract documents.	The precaster has two alternatives: (a) Submit erection and shape drawings with all necessary details and design information for the approval and ultimate responsibility of the designer. (b) Submit erection and shape drawings, and design information for approval and assume responsibility for the panel structural design; that is, the individual units, but not their effect on the building. Precasters accepting this practice may either stamp (seal) drawings themselves, or commission engineering firms to perform the design and stamp the drawings. The choice between the alternatives (a) and (b) should be decided between the designer and the precaster prior to bidding with either approach clearly stated in the specifications for proper allocation of design responsibility. Experience has shown that divided design responsibility can create contractual problems. It is essential that the allocation of design responsibility is understood and clearly expressed in the contract documents.
OPTION III	
Cover general aesthetic and performance requirements only and provide sufficient detail to define the scope of the precast concrete work.	The precaster should participate in the preliminary design stage and the development of the final details and specifications for the precast concrete units and should work with the design team to provide an efficient design. The precaster provides the engineering design of the precast concrete units and their connections to the structure and should work with the design team to coordinate the interfacing work. The precaster should submit design information for approval and shop drawings at various stages of completion for coordination with other work.

and weatherproofing, and specifies performance characteristics, as well as inspection parameters and testing requirements in the contract documents.

The architect and EOR have responsibility to coordinate the design aspects of the precast concrete panels such as aesthetics, dimensions and loads to structure. The architect or EOR may specify in the contract documents that design services for portions of the work are to be provided by the precaster. Typically design services are performed for the precaster by a licensed engineer who can be an employee of the precaster or

an independent structural engineer. The contract documents should clearly define the scope of the precast concrete design requirements and document review responsibilities, as well as the responsibilities of other-parties providing design services.

The contract drawings prepared by the design team should provide the overall geometry and dimensions of the structure, member or panel dimensions and cross-sections, typical connection locations and details, and concepts so all precasters are estimating based on the same information. The architect's drawings may only show reveals or design articulation, allowing the precaster to determine panel sizes suitable to their handling and erection capabilities. In addition, the contract documents (specifications and design drawings) also should provide the general performance criteria, design loads, including concrete strength requirements, deflection requirements, temperature considerations, and any tolerance or clearance requirements for proper interfacing with other elements of the structure.

The order in which the project contract, specifications, or drawings prevail in the event of conflicts should be clearly defined. All aesthetic, functional, and structural requirements should be detailed.

The design team should provide complete, clear, and concise drawings and specifications. Contract documents should clearly define: (1) precast concrete components that are to be designed by the precaster (state who takes responsibility for design of elements at interfaces with other parts of the structure, such as the secondary steel bracing of the structure, to prevent rotation of beams or columns); (2) details or concepts of supports, connections, and clearances that are part of the structure designed by the design team and that will interface with the precast concrete components; and (3) permissible design load transfer points and indicate generic connection types to avoid having the precaster make assumptions on connection types and piece counts during bidding and design. It is preferable to leave specific panel and connection design to precasters so they can design details and connections suitable for their production and erection techniques.

The architect and EOR should review designs, calculations, and shop drawings submitted by the precaster for conformance with design criteria, loading requirements, connection points, and design concepts as specified in the contract documents. This review, however, does not relieve the precaster and the precast concrete engineer of their design responsibilities.

Key design issues for the design team. The contract drawings prepared by the design team should provide a clear representation of the configurations and dimensions of individual precast concrete units and their relationship to the structure and to other materials. Contract documents that are unclear and lack detail may extend shop drawing preparation time, lead to confusion over work scope, and impact the project schedule.

The contract documents should supply the following information:

- Elevations, sections, and dimensions necessary to define the sizes and shapes (profiles) of each different type of precast concrete element;
- Locations of joints, real (functional) or false (aesthetic);
- Required materials, color and finish treatment for all surfaces with a clear indication of which surfaces are to be exposed to view when installed;
- Corner details;
- Details for jointing and interfacing with other materials (coordinated with the general contractor), including windows, roofing, and other wall systems;
- Openings for services and equipment, with their approximate size and location;
- Details for special or unusual conditions including fire endurance requirements;
- Governing building codes, design loads, and deflection limitations;
- Specified dimensional tolerances for the precast concrete and the supporting structure, location tolerances for the contractors' hardware, clearance requirements, and erection tolerances for the precast concrete. Exceptions to PCI MNL-117 or MNL-135 tolerances are not recommended;
- Support locations for gravity and lateral loads;
- Building location and site access; and
- Delineation of lateral bracing for structural beams or any unusual erection sequence requirements.

The precaster uses the information from the contract drawings and documents to generate shape and erection drawings and design calculations. These drawings should detail elevations showing panel sizes, surface features, and panel relationships; detail sheets should show panel cross-sections, special edge conditions,

and feature details; and should specify connection details showing mechanisms and locations of load transfers to the supporting structure. Allowing the precaster to suggest configurations of the precast concrete units and the opportunity to select which joints are false and which are real (panelization) will achieve greater economy and flexibility in production and erection.

The design team should review shop drawings in a timely manner to ensure their general conformance with the contract documents, to avoid delay in the project schedule, and to respond to aesthetic questions raised by the construction team. Architectural and structural review and clarification of dimensions and detailing should be anticipated. Following this review, the precaster will make the appropriate revisions to the shop drawings. Open discussion between the architect and precaster should be allowed and encouraged in order to achieve the best possible design for the project.

Producing small mockups is encouraged to help verify the appearance of the completed façade and clarify actual field-construction techniques and material interface issues. If the units have returns, the same size return should appear in the mockup panels.

The architect establishes the standards of acceptability for surface finish, color range, and remedial procedures for production and construction defects and damage. This can be best accomplished by the precaster producing at least three sample panels, 15 to 20 ft^2 (1.4 to 1.9 m^2) each, before the initial production to establish the range of acceptability with respect to color and texture variations, surface blemishes, and overall appearance. In addition the architect should visit the plant during the first week of production to evaluate conformance with approved samples.

Panel-to-panel joint design and the proper sealing at windows and other penetrations in the exterior wall is necessary to prevent air and water infiltration. The architect is responsible for providing these designs and details. Precast concrete is inherently watertight and impermeable and therefore it is important to have watertight joints at the window-to-precast concrete interface to prevent water leaks. The architect should examine and modify these details, as required. The contract documents should require that the same sealant contractor seal all joints in order to avoid sealant incompatibility thereby providing single source responsibility.

For large projects or for special conditions where moisture protection is a concern, specifications can call for the production, shipping, and erection of a full-scale mockup at a testing lab. This mockup would include various precast concrete and window elements assembled and caulked. While, a wind-driven rain test, can be costly and time consuming, it can verify moisture protection details and satisfy any moisture penetration concerns or requirements. The cost of these tests must be included in the project budget. These mockups and tests can be expensive and should be specified only where there is a demonstrated need. When such tests are needed, sufficient time must be provided in the project schedule to evaluate the test results and incorporate any consequent modifications into the final design.

After the product is erected and detailed, the architect should promptly prepare a punch list setting forth, in accurate detail, any items of the work that are not found to be in accordance with the contract documents so that proper corrective action may be taken. A meeting between the contractor, precaster, erector, and design team should then be held promptly to discuss any questions concerning what the design team requires to be done before the work can be accepted as complete. All repairs should conform to the contract documents and the architect's requirements (for matching the color and finish of the approved sample) and should be structurally sound. If the repairs cannot be completed to a satisfactory level the repairs may be rejected. The industry standard for evaluating the visual acceptability of repairs is at a 20 ft (6 m) viewing distance with the unaided eye.

When advised by the precaster that the punch list items have been completed, the GC/CM and design team should check the corrections. After the precast concrete units have been accepted, subsequent responsibility and liability for their condition rest with the GC/CM.

4.1.3 Responsibilities of the Engineer of Record

The EOR has responsibility for specifying the design criteria for the design of the precast concrete elements and for describing the intended load paths. The EOR should anticipate the loadings in the structural design and provide a structural system adequate to support these loads. The EOR should define the type of loading to be applied to the panels and the structure, as well as provide information, applicable codes (design criteria), including wind, seismic or blast design, when

applicable. The EOR should consider the consequences of the eccentricities of the weight of the precast concrete panels when designing the supporting structure. Any special erection procedures or sequences should be clearly defined, prior to bidding, in the contract documents. For example, can one elevation be erected at a time (less crane movement), or must the erection be one level at a time to prevent undue stresses on the structure? Observations in the field have shown that where precast concrete panels are erected to a greater height on one side of a multistory building than on the other, the steel framing can be pulled out of alignment. Precast concrete panels can be erected at a relatively uniform rate around the perimeter of the structure or the designer of the structural frame should determine the degree of imbalanced loading permitted. Other limitations may involve the rigidity of the structure, requiring that walls not be erected prior to completion of floors designed to carry the lateral loads. The EOR has the responsibility of reviewing the precast concrete design work for compatibility with the overall structural design and structual stability. This does not, however, relieve the EOR from the overall design responsibility for the safety and proper performance of the completed structure.

The EOR should determine and show on the contract documents the locations for supporting the gravity and lateral loads of the precast concrete units, including intermediate lateral (tieback) connections, if necessary. The EOR's review of the erection drawings confirms that the structure is adequate, within defined deflection limitations, to resist the anticipated loads and forces from the precast concrete, and verifies that the magnitude and location of the loading points on the structure agree with the original design intent. It is important that preliminary meeting(s) between the architect, EOR, and precaster be held before structural members are ordered and fabricated so panel sizes, shapes, and basic connections and their locations can be established. For steel frame structures, the EOR should determine how far in advance the final connections of the frame must be completed prior to precast concrete panel erection.

The gravity supports of precast concrete panels are generally eccentric to the centerline of the supporting steel or concrete members. The EOR should design the structural members to prevent excessive deflection and rotation of the supporting structure during and after erection of the precast concrete, as well as determining the need for diagonal bracing or stiffening of supporting structural members. Supplemental framing necessary to support the precast concrete should be noted on the structural drawings. Responsibility for designing, supplying, and installing the bracing for the structure and the secondary steel should be clearly addressed in the contract documents and discussed in a prebid meeting. Typically, the steel subcontractor supplies all supplemental support, such as diagonal bracing and stiffeners based on the EOR's design, and coordinates locations with the precast concrete erection drawings.

4.1.4 Responsibilities of the General Contractor/Construction Manager

The responsibilities of the CM, who is engaged by the owner to manage and administer the construction, may be different from those of the GC, depending on the CM's agreement with the owner and local practice. The responsibilities of the CM, while generally similar to those of the GC, should be clearly defined in the contract documents.

The GC/CM should have the responsibility and authority of implementing the design intent of the contract documents, which includes furnishing materials, equipment, and labor; maintaining specified quality and schedule requirements; and coordinating of all trades. The GC is responsible for construction means, methods, techniques, sequences, and procedures. Also, the GC should initiate, maintain, and supervise all safety procedures and programs on the construction site. Site access to the structure for erection of the precast concrete elements is an important issue. The GC is responsible for providing and maintaining clear, level, well-drained unloading areas and stabilized road access around and into the structure so the hauling and erection equipment are able to operate under their own power.

The GC/CM generally has no direct design responsibility but does, however, have considerable impact on the design process through their coordination role. The GC/CM is responsible for coordinating the information necessary to allow the preparation of the precast concrete erection drawings as well as reviewing and securing approval for the shop drawings, samples, mockups, and range samples. The GC/CM receives the shop drawing submittals from the various trades and together they form the completed project design. The GC/CM is re-

sponsible for the timely transmission and resolution of requests for information (RFI). The GC/CM is normally responsible for project schedule, grid dimensions at each floor level (which includes control points, benchmarks, lines on the building, and work points for angled or curved building elevations), so all trades are working from uniform data and common reference points. Dimensional interfacing of the precast concrete with other materials and construction trades, and the maintenance of the structure's specified tolerances to ensure proper fit, is also a responsibility of the GC/CM. The GC should notify the precaster and erector when as-built conditions (dimensions) of the structural framing vary beyond the tolerances stated on the contract drawings. Dimensional tolerances between interfacing materials, such as precast concrete units and glazing, should also be considered.

The GC/CM should encourage direct communication between the precaster, EOR, and the architect. All communications should be confirmed in writing and distributed to all parties in order to avoid misunderstandings.

Typically, the GC is responsible for placing embedded items in cast-in-place concrete and coordinating steel attachments with the steel fabricator according to a layout or anchor plan supplied by the precaster. In most instances, the most economical approach is to have required connection hardware attached to steel columns or beams by the steel fabricator. This necessitates awarding the precast concrete contract simultaneously with the steel contract so that early coordination between these trades can occur. Changes to panel bearing surface and anchorage locations other than adjustments within prescribed tolerances require approval by the design team. The GC/CM should provide the precaster with as-built surveys of embedded items, anchor bolts, and other attached hardware so that misaligned or missing hardware can be identified and remedial actions undertaken by GC/CM prior to erection of precast concrete units.

For concrete frames, the GC/CM should provide the erector with authorization to begin erection after the concrete has reached design strength and any interfering formwork or shoring has been removed. For steel frame structures, the GC/CM should provide the erector with the authorization to begin erection after the steel frame has been adequately detailed and stabilized, which is typically after concrete floors have been placed.

After erection of the precast concrete panels, the GC/CM should notify the architect for the inspection of the precast concrete work. Representatives of the precaster and the erector participate in this inspection tour and answer any questions posed by the architect. The GC/CM should request a final punch list from the architect so that remedial items can be finished in a timely manner to avoid delaying subsequent trades.

After the precast concrete units have been installed on the structure in conformance with plans and specifications and the installation is accepted by the architect, subsequent responsibility and liability for the protection of the precast concrete during the construction phase of the project should rest with the GC. Provisions for any construction loads that are in excess of stated design requirements and may occur after precast concrete unit installation are the responsibility of the GC, not the precaster or erector.

4.1.4.1 Bid Process

Where the selection of a precaster is not negotiated or controlled by the owner or architect, but is instead governed by an open-bid situation, the following bid process is recommended.

STEP 1 — Verification of architect's concepts and systems. A review of the proposed precast concrete concepts during the early design development stage of the architectural contract documents should be arranged with at least one local precaster. This review confirms or modifies the architectural concept so that a realistic design is presented on the bid drawings.

Items to be discussed or reviewed:

- Panelization, form families, piece sizes and weights, and reveals;
- Shipping and erection issues;
- Architect's concept for structural support or connections for the precast concrete units so that the architect can communicate support requirements to the EOR;
- Desired aesthetic issues relative to mixture(s) and finish(es) and the sample process;
- The architect's intent for any interfaces with adjacent systems, such as windows, roofing, or building entrances; and
- Requirements for mockups or other special testing requirements.

STEP 2 — The prebid conference. This is a recommended meeting for all precasters intending to bid the project, usually held at least three weeks before the bid date. The design team presents the precast concrete concepts for the project so that competitive and responsive bids will be obtained. This will improve communications and resolve outstanding questions prior to preparation of cost estimates and bids. Items to be discussed include:

- Specifications, PCI plant certification requirements, and any special provisions;
- Design responsibilities and lines of communication;
- The architect's approved finish samples with information on the mixture proportions, where applicable;
- Prebid submittal requirements, such as proposal drawings and finish samples;
- Project schedule, shop drawing submittal requirements, and architectural review turnaround times;
- Panelization of precast concrete units;
- Mockups, if applicable;
- Potential problems, discrepancies, or both, found in the contract documents;
- How and where the project's precast concrete units will be structurally attached to the building frame;
- Interfacing with other trades;
- Responsibility for designing, providing, and installing embedded items, anchor bolts, connection hardware attached to structural steel, bracing, and other structural items;
- Hardware and reinforcement finishes;
- Special erection needs (access, crane limitations, and sequence) and logistics; and
- Responsibility for caulking of precast concrete panel joints.

STEP 3 — Post-Bid scope review: This review allows the architect and GC/CM to review the precaster's proposal and confirms the precaster's ability to satisfactorily meet the project requirements and conform to design concepts and finish requirements. This material should include:

- Proposal drawings, which express the architectural precast concrete panelization and structural connection concepts;
- Finish samples;
- The history of the precaster's organization as well as confirmation of the plant's PCI quality-assurance (plant certification) program;
- A list of comparable projects, references, and financial capability;
- Key schedule items, such as mockup panels, shop drawings and design submittals, mold production, production start and durations, and erection start and durations (if applicable); and
- Qualifications to the bid that can be listed and reviewed.

If the project allows for a negotiated precast concrete contract, and the precaster is brought on board during the initial stages of development, prebid and bid submittal information can be minimized.

Construction coordination. A construction conference should be held at the jobsite after award of the precast concrete and erection contracts. The GC/CM should conduct frequent jobsite meetings to coordinate precast concrete design and erection with the work of other trades and general building construction.

The coordination meetings should consider all details of loading, delivery sequences and schedules, types of transportation, routes of ingress and egress for delivery trucks and erection cranes, handling techniques and devices, connections, erection methods and sequences, the effects of temporary bracing on other trades, and onsite storage and protection. Questions regarding site access, street use, sidewalk permits, oversized loads, lighting, or unusual working hours should be addressed at this time.

4.1.5 Responsibilities of the Precaster

Precasters will perform component and connection design of the members they produce when required by the contract documents. Precast concrete reinforcement is determined by building codes and industry standards and the design criteria defined by the contract documents.

All drawings and specifications that convey the requirements for the precast concrete scope should be provided to the precaster. Pertinent drawings might include architectural, structural, electrical, plumbing, and mechanical drawings depending on the size and scope of the project; approved shop drawings from other trades; and site plans showing available erection access and storage areas.

For practical reasons and economy, the precaster first determines the panelization (panel sizing and joints) and then the connections. Ideally, a precaster performs value engineering early in the preliminary design phase (in a partnering relationship) to reduce construction costs, improve structural efficiency, facilitate erection and precast concrete performance.

The precaster should request clarification of ambiguities in writing from the design team through contractual channels on special conditions not clearly defined by the design documents. Precast concrete erection and shape drawings should be submitted to the design team for approval or acceptance. This submittal is typically done through the general contractor. When the construction schedule demands a rapid turn-around time for review of drawing submittals, the precaster should notify the design team of their obligations to review and return submitted drawings within the agreed upon time period to avoid costly delays in the project schedule. Review meetings for information exchange and resolution of conflicts can expedite the approval process.

The precaster prepares detailed shape and erection drawings and design calculations that are usually signed and sealed by a professional engineer registered in the state where the project is located. These drawings and calculations should show all design criteria, identify all materials, illustrate precast concrete panel interfacing with other precast concrete units, the structure and adjacent materials, and indicate the magnitude and location of all design loads imparted to the structure by the precast concrete connections. Design modifications should be permitted only after the design team's approval of the proposed change.

The precaster designs the precast concrete panels and connection hardware for the design loads defined by the EOR and is responsible for selecting, designing, and locating hardware and panel reinforcement or items associated with the precaster's methods of handling, storing, shipping, and erecting the precast concrete units. If necessary, this also includes an erection and bracing sequence developed in conjunction with the erector, EOR, and GC to maintain the stability of the structure during the erection phase.

Additional design responsibilities for the precaster should be clearly defined in the contract documents and may occur when the design team uses Options II and III (Table 4.1.1). Option III might be used for design-build or with performance specifications.

Quality control for product manufacturing is provided by the precaster according to provisions contained in a comprehensive quality system manual developed by the precaster in addition to requirements contained in PCI MNL-117. Quality assurance is provided through the precaster's participation in the PCI Plant Certification Program. Additional inspection at the owner's expense may be required, by specification, through the owner's quality assurance agency.

4.1.6 Responsibilities of the Erector

The responsibility for erection of the precast concrete units may be part of the precaster's contract, to be performed by the precaster's own crews or subcontracted to specialized erection firms, or it may be assigned separately by the GC. Fabrication and erection included in one contract is recommended by precasters because this improves coordination and provides single source responsibility.

Erectors and precasters coordinate development of efficient connections to facilitate erection for each project based on their equipment and expertise. The erector should coordinate the erection plan including the sequence of erection with the GC/CM and the precaster.

The precast concrete erector should layout the panels based on the GC/CM's control lines and elevation data. This layout should provide panel and joint locations and elevations. This survey should identify any potential problems caused by building-frame columns, or beams that are misaligned or out of dimensional tolerance. Any discrepancies between site conditions and the erection drawings, which may cause problems during erection, should be noted in writing and sent to the GC/CM for resolution prior to the start of erection. Some of these potential problems could include improper structural steel alignment or hardware installation, errors in bearing elevation or location, and obstructions caused by other trades. Erection should not proceed until these discrepancies are corrected by the GC/CM, or until the erection requirements are modified. This survey will also keep the differential variation in joint widths to a minimum and expedite precast concrete panel erection.

Installation quality assurance will be in accordance with industry standards, such as the *PCI Erectors' Manual-Standards and Guidelines for the Erection of Precast Concrete Products* (MNL-127). Additional qual-

ity assurance can be provided by requiring installation by an industry-qualified or certified erector.

4.2 STRUCTURAL DESIGN

4.2.1 General Considerations

This section constitutes design considerations including a checklist over and above those listed in Chapters 2, 3, and elsewhere in this chapter. The sequence of these considerations is not of importance, but it is important that the designer use these criteria when making decisions about the ultimate quality and economy of the final structural system. Design approaches, determination of loads, dimensioning of precast concrete panels, reinforcement, and contract drawings are among the subjects treated in detail in this section.

When choosing a façade system it is important to compare the advantages and disadvantages of both loadbearing or non-loadbearing units. This is a decision that has unique considerations for each project.

Most architectural panels are non-loadbearing; they are required to resist only those stresses acting on the panels themselves. However, the façade is also capable of acting in conjunction with the rest of the framing system to carry vertical loads from the floors and provide stiffness to the structure for lateral restraint in addition to supporting its own weight. This loadbearing-panel design approach takes advantage of the high compressive strength of the concrete and the reinforcement content necessary for handling of precast concrete units that is available to resist load in the completed structure. Any increased cost due to connections and erection time is more than offset by the reduction of structural framing costs.

For a pronounced horizontal façade, either loadbearing spandrel panels or non-loadbearing façade units can be used. For façades without a dominant vertical or horizontal structure, the choice between loadbearing and non-loadbearing façade panels will be governed by the specific conditions of the project.

The typical factors in the structural design of architectural precast concrete units include:

1. Shape and its impact on mold design, see Section 3.3.
2. Properties of the concrete, see Section 3.2.6.
3. Hardware for handling and connections, see Sections 4.5.4 and 4.5.6.
4. Loads for plant handling, transportation, and erection, see Section 4.2.9.
5. In-service loads, see Sections 4.2.2 through 4.2.7.
6. Reinforcement, see Section 4.4.
7. Connections, see Section 4.5
8. Tolerances, see Section 4.6
9. Joints, see Section 4.7

4.2.1.1 Design objectives

Structural integrity of the completed structure is the primary objective of the structural design. Deflections must be limited to acceptable levels. The inherent stiffness of architectural precast concrete panels can be employed to significantly reduce deflections and improve stability of a structure.

Economy is an important design objective when chosing the structural system since the total cost of a completed structure is generally the determining factor when comparing alternative construction materials. The designer should attempt to optimize the entire structure and consider the advantages provided by multifunctional precast concrete panels. In this regard, the designer should be aware of the major economies offered by standardization or repetition of panel shapes and sizes. Consideration must also be given to the cost of large versus small panels regarding weight limitations on transportation, crane capacity, and crane location.

Repetition reduces mold construction costs by requiring the construction of fewer molds. Consequently, production-line processes can be implemented in the plant enabling a particular casting sequence to be repeated each day, which leads to improvements in efficiency through the repeated operations of familiar tasks. Handling, storage, and delivery operations are also simplified with panel repetition, and the risk of errors is reduced. Site efficiency is also improved because erection sequences can be repeated as well.

Even when a high degree of repetition appears possible, as details are finalized, design discipline may be required to avoid the creation of a large number of non-repetitive units. Any budget costs estimated by the precaster at the initial design stage should take into account the possibility that the number of different units will increase as the design progresses. If non-repetitive units must be used, any increase in cost can be minimized if they can be cast from a master mold

with simple modifications instead of completely different molds. In general, it is relatively simple to alter a mold if the variations can be contained within the total mold envelope by use of bulkheads or blockouts, rather than by cutting into the mold surface.

The term "standard" is difficult to define, but panels cannot truly be described as standard unless they are identical in every respect. Even relatively minor variations, such as the positions of connections, are sufficient to make a unit non-standard (non-repetitive) and subject to higher unit costs. However, precasters can generally accommodate minor panel changes without incurring significant cost premiums.

The aesthetic design objectives for the structure should be a matter of concern to the structural engineer. A precast concrete element or system may achieve all design objectives but the aesthetic ones due to structural requirements.

For wind or seismic design, the panels should be designed to limit damage for the extreme events. To allow the precast concrete panels to undergo less deformation than the supporting structure, the connections can be designed to accomodate the supporting structure movement. The connections can be designed to sustain deformations and rotation associated with extreme design loads without fracture (exhibit strength and connection ductility).

The direction of the ground motion caused by a seismic event cannot be predicted. Therefore, a structure shaped to be equally resistant in any direction is the optimum solution. Experience has shown that a structure that is symmetrical in plan, with minimum torsional eccentricity, generally behaves better in earthquakes than a structure that is asymmetrical and has its center of mass and rigidity well separated.

4.2.1.2 Design criteria

Building codes contain design criteria upon which the design of the building must be based. In some cases, these criteria are general and it thus becomes necessary for the designer to develop specific criteria. PCI, the American Concrete Institute (ACI), and other organizations have also developed useful design criteria and methods.

Selection of design criteria is one of the many important choices that must be made in the design process. In some cases, prescriptive criteria can be used in lieu of analysis. An example would be the use of a $^1/_4$ in. (6 mm) provision for differential movement between two adjacent stories in a multistory building as a criterion for the design of the connections. By adopting this criterion, the designer is making a judgment instead of calculating the amount of movement for the specific structure under applied loads. Whenever such general criteria are adopted, the designer should consider the limitations involved in their application.

The designer of a precast concrete building can choose to transfer loads through architectural precast concrete elements or not. In the preliminary design phase, the structural engineer should recognize their ability to choose the load transfer mechanism rather than analyze a predetermined set of criteria.

In some cases, design and analysis of a single precast concrete element can be completed with very little consideration of other materials and elements in the structure. The weight of the element and the superimposed loads are simply transferred to the supports, and the design of the element can be considered independent of the structure. Occasionally, however, it is necessary to consider the characteristics of other materials and elements within the structure. For example, neglecting the relative movement between the precast concrete cladding and the supporting structure may lead to inaccurate estimates of connection forces. These movements result from differential volume changes between the panel and the supporting structure and deformation of the supporting structure under applied loads. Forces induced by restrained differential movements between the panel and the supporting structure are best avoided by design provisions that allow sufficient relative movement at the connections.

Architectural precast concrete design can be considered in three parts:

1. Precast concrete elements individually.
2. Support system(s) for the precast concrete elements, such as the beam, slab, wall, column, and foundation.
3. Connections that serve to join the precast concrete element to its support system.

The design of the architectural precast concrete elements, and the structure of which they are a part, involves load transfer, consideration of stability, and the potential for movement of the panels or the structure.

The design engineer is referred to the *PCI Design Handbook—Precast and Prestressed Concrete* (MNL-120) and *Design and Typical Details of Connections for Precast and Prestressed Concrete* (MNL-123) for design procedures.

The designer must take careful note of the allowable tolerances for the structural system. This is particularly important for isolated elements forming a long vertical line, such as column covers, where any deviation from vertical is readily noticed.

All non-loadbearing elements should be designed to accommodate relative movement freely between the panel and the supporting structural frame and, whenever possible, without redundant supports, except where provisions are necessary to restrain panel bowing. It should be noted that high stresses can be induced if bowing is completely restrained.

4.2.1.3 Checklist

The following is a checklist of items the design team should consider in the design, manufacture, and erection of architectural precast concrete elements.

Architectural Requirements

1. Loadbearing or non-loadbearing.
2. Finishes. For full information on the many and varied types of finish available, contact PCI architectural precast concrete manufacturers or refer to the *PCI Color and Texture Selection Guide*.
3. Insulated or non-insulated panels, refer to Section 5.3.

Size of Panel

1. Weight limitations.
2. Production limitations.
3. Transportation weight and dimension limitations.
4. Erection feasibility and access.
5. Stress limitations.

Supporting Structure

1. Points of load application.
2. Overall stability.
3. Stability during erection.

Standardization

Obtain maximum repetition of similar units to reduce overall costs.

Design of Connections

Refer to Section 4.5.

Detailed Design of Panel – refer to Chapters 3 and 4

1. Concrete mixture proportions.
2. Reinforcement:
   a. For function in final position.
   b. For stripping, storage, transportation, and erection.
3. Design of connections, inserts, hardware lifting hooks, etc. for stripping, storage, transportation, and erection.

Shop Drawings

For acceptable standards refer to *PCI Architectural Precast Concrete Drafting Handbook* (MNL-119), including:

1. Erection drawings.
2. Anchor layout drawings.
3. Connections details.
4. Piece drawings.
5. Hardware details.
6. Storage diagrams.
7. Drawings for special handling.

Molds

For information on the various materials used for the manufacture and design of molds, contact a PCI certified architectural precaster.

Production

For information regarding materials to be used and production methods to be followed, refer to *PCI Manual for Quality Control for Plants and Production of Architectural Precast Concrete Products* (MNL-117).

Quality Control

For information on the requirements of quality control over the entire production sequence, refer to PCI MNL-117.

Transportation

Refer to Section 2.1.4 in *PCI Erectors' Manual–Standards and Guidelines for the Erection of Precast Concrete Products* (MNL-127) for:

1. Types of trailers.
2. Types of support frames.
3. Support material.

For further detailed information on methods, materials, and equipment used in handling and transporting all types of precast concrete units, contact a PCI certified architectural precaster

Erection

For the successful use of architectural precast concrete, the designer must envision the erection process, refer to *PCI Erectors' Manual-Standards and Guidelines for the Erection of Precast Concrete Products* (MNL-127):

1. Unimpeded access to allow for continuous erection, working and storage space, staging area for trailers and cranes.
2. Equipment, cranes, monorail hoists, etc.
3. Lifting, turning, tilting units.
4. Survey of new or existing structural frame, location of cast-in hardware.

Economy

1. Design, production, transportation, and erection costs.
2. Progress payments for completed units stored at plant.
3. Economy of precast concrete.

Tolerances – refer to Section 4.6

1. Design of project clearances.
2. Cast-in-place concrete or steel support structure tolerances, sway, creep, differential deflection.
3. Production tolerances, dimensions, bowing, warping.
4. Erection tolerances:
   a. Between precast concrete units and supporting structure.
   b. Between precast concrete units.

4.2.2 Determination of Loads

The structural design of the architectural precast concrete elements involves load transfer and consideration of stability. Achievement of structural design objectives also requires the consideration of movement or the potential for movement within the system of which the precast concrete element is a part.

The forces that must be considered in the design of structures that contain architectural precast concrete can be classified as follows:

1. Those caused by the precast concrete members (for example, their self weight and effect on seismic forces). Each unit has to support its own weight and may have to transmit this and the weight of other units or elements, such as windows, to the structure.
2. Loads imposed on the precast concrete units during handling, transportation, and erection (prior to installation on the building). (Design for these loads is normally the responsibility of the precaster, as the stresses during handling and erection often govern the design of the precast concrete units.)
3. Those in service structural loads that are externally applied to the unit or transferred to the unit by the behavior of the supporting structure. These loads can include wind, seismic, snow, blast, floor live and dead loads, or construction loads, and should be shown on the contract drawings. In-service loads are set by the governing building code and are multiplied by the appropriate load factors for use in design.
4. Loads resulting from restrained volume change or support-system movement. These forces are generally concentrated at the connections and sometimes govern the connection design. The designer should provide simple load paths through the connections, and ductility within the connections. This will reduce the sensitivity of the connection to these forces and the necessity to precisely calculate loads and forces from, for example, volume changes and frame distortions. The number of load transfer points should be kept to a practical minimum. It is recommended that no more than two connections per panel be used to transfer gravity loads.

The forces or stresses imposed on precast concrete units during the manufacturing-erection processes occur primarily as a result of the member being in an orientation differing from that of its final position in the structure. Manufacturing and erection stresses are controlled by the fact, for example, that the concrete strength at time of stripping may only be a fraction of its final design strength. Thus, for maximum economy of material, the production process should be given consideration as part of the structural design process. In particular, architectural precast concrete panels should be shaped such that they will be sufficiently stiff in the direction of handling-induced stresses. Limitations on product dimensions imposed by transportation should also be considered during the design process; the designer should be familiar with legal load limitations and cost premiums associated with transporting overheight, over-width or over-length members.

In-service loads may not be as critical as those imposed during the manufacturing-erection process, except for panels in zones of high seismicity, hurricane

winds, or loadbearing panels. Generally, the determination of in-service loads, including loads imposed on the structure by the architectural precast concrete are the responsibility of the EOR.

In high-rise construction, vertical precast concrete panels can span multiple floors. Multiple vertical floor spans require gravity loads to be supported at only one floor per panel thus loading every second or third floor-see Fig. 2.4.14, page 70. That way, most floors can be designed without the need to support the gravity loads of the exterior skin, thus reducing the overall structure's cost. This approach may not be practical in seismic zones because of drift requirements.

4.2.3 Volume Changes

Volume changes of precast concrete are caused by variations in temperature, shrinkage due to air-drying, and creep caused by sustained stress. If precast concrete members are free to move or deform, volume changes cause little or no stress in the panel. However, if the panel is restrained, significant stresses and cracking may develop. For example, welding long precast concrete panels directly to the structure at both ends should be avoided. Different temperatures on the interior and exterior of the building may cause the panel to bow. This bowing can be resisted by center connections, but this causes stresses in the panel that should be considered in design.

Volume changes due to temperature variations can be positive (expansion) or negative (contraction), while volume changes from shrinkage and creep are only negative. The amount of movement anticipated due to volume change must be determined to properly design joints and connections.

Because architectural precast concrete members are generally not subjected to large sustained stresses, volume changes due to creep are usually minimal. Thus, the volume changes in architectural precast concrete that must be recognized and accounted for are due to temperature and drying shrinkage. The amount of these volume changes that are tolerable depends on jointing and connection details of the structure. In most cases, any panel shortening that takes place prior to making the final connections will reduce the shrinkage and creep strains to manageable proportions.

For low- to medium-rise structures the major effect of volume change in the precast concrete units will be in the horizontal direction. Nevertheless, vertical elements, such as loadbearing wall panels, are also subject to volume-change strains. Volume change effects in the vertical direction will usually be significant only in high-rise buildings, and then only differential movement between elements will significantly affect the performance of a structure. This can occur, for example, at the corner of a building where loadbearing and non-loadbearing panels may meet or where precast concrete panels are connected to a cast-in-place frame.

Estimates of building movement must be tempered with engineering judgment. Floors and interior walls attached to exterior loadbearing panels will tend to restrain vertical movement. Also, heavily loaded elements will tend to distribute load to less heavily loaded ones.

4.2.3.1 Temperature effects

The coefficient of thermal expansion of concrete varies with the aggregate type. Ranges for normalweight concrete are 5 to 7 x 10^{-6} in./in./°F (9 to 12.6 x 10^{-6} mm/mm/°C) when made with siliceous aggregates and 3.5 to 5 x 10^{-6} in./in./°F (6.3 to 9 x 10^{-6} mm/mm/°C) when made with calcareous aggregates. The approximate values for structural lightweight concretes are 3.6 to 6 x 10^{-6} in./in./°F (6.5 to 10.8 x 10^{-6} mm/mm/°C), depending on the type of aggregate and amount of natural sand. Coefficients of 6 x 10^{-6} in./in./°F (10.8 x 10^{-6} mm/mm/°C) for normalweight and 5 x 10^{-6} in./in./°F (9 x 10^{-6} mm/mm/°C) for sand-lightweight concretes respectively, are frequently used. If greater accuracy is needed, tests should be made on the specific concrete to be used in the project.

Because the thermal coefficient for steel is approximately 6 x 10^{-6} in./in./°F (10.8 × 10^{-6} mm/mm/°C) , the addition of steel reinforcement does not significantly affect the concrete coefficient.

4.2.3.2 Shrinkage

Precast concrete members are subject to air-drying as soon as they are removed from the molds. During this exposure to the atmosphere, the concrete slowly loses some of its original water causing shrinkage to occur. About 40% of drying shrinkage occurs by age 30 days and about 60% by age 90 days. The rate and amount of shrinkage is dependent on the concrete mixture proportions and materials, the temperature and hu-

midity of the environment, and the size and shape of the member.

During the first year, the total unit length change due to drying shrinkage of normalweight concrete typically ranges from about 4.0 to 6.5 x 10^{-6} in./in. when exposed to air at 50% relative humidity (RH). Lightweight concrete containing all natural sand fines has one-year shrinkage values that range from 5.5 to 9.0 x 10^{-6} in./in.; concrete with a unit shrinkage of 6.0 x 10^{-6} in./in. shortens about 0.72 in. (18 mm) per 100 ft (30 m) while drying from a moist condition to a state of moisture equilibrium in air at 50% RH. In comparison, this equals approximately the thermal contraction caused by a decrease in temperature of 100 °F (38 °C).

Differential shrinkage within panels containing face mixtures and/or material prone to shrinkage (brick, tile, etc.) must be carefully evaluated to avoid excessive bowing.

Sufficient reinforcement must be used in each unit to control the distribution and crack widths of any shrinkage cracking. Where units have complex shapes, and particularly where they have unbalanced volumes, unsymmetrical reinforcement, large protrusions, or changes of section, the risk of shrinkage cracking is increased. Distortion (bowing or warping) of the panel can also occur due to these causes.

4.2.3.3 Creep

When concrete is subjected to a sustained load, the deformation may be divided into two parts: (1) an elastic deformation that occurs immediately, and (2) a time-dependent deformation (creep) that begins immediately upon application of load or prestress and continues over time.

For design, it is convenient to refer to specific creep, which is defined as the creep strain per unit of sustained stress. The specific creep of architectural precast concrete panels made with normalweight aggregates per unit stress (psi) can range from 0.5 to 1.0 x 10^{-6} in./in./psi. About 40% of the creep occurs within 30 days of load application, and about 60% occurs within 90 days.

4.2.4 Design Considerations for Non-Loadbearing Wall Panels

Non-loadbearing (cladding) panels are those precast concrete units that transfer their own dead loads and any imposed dead loads, such as windows, to the structural frame or foundation. They are designed to resist wind and seismic forces and also may be designed to take wind or seismic loads distributed to the panel from elements fastened directly to it, such as windows. The forces imposed during manufacturing and erection also need to be considered in the design of the panels. Wind may control the design loads in hurricane regions, building corner zones, or panels adjacent to large openings. The forces resulting from seismic considerations will generally govern connection design, but will usually result in panel stresses less than those imposed during manufacturing and erection.

All non-loadbearing panels should be designed to accommodate some movement. Potential differential movements between the panel and the supporting structure must be evaluated, and care taken to prevent unintended restraints from imposing additional loads on the panel. The supporting structure may deform due to the weight of the panel, volume changes in concrete frames, or rotation of supporting beams. Unintended load transfer among adjacent panels should be avoided. This is accomplished by detailing joints with sufficient space so that the anticipated deformation of the supporting structure and the panel will be less than the space between elements. Also, the connections must be designed and installed to permit expected deformations to freely occur.

The panel cross-section is generally chosen for architectural or aesthetic reasons. A panel that is too thin may bow or deflect excessively, thereby creating caulking problems at the building corners or fit-up and leakage problems at attached windows.

As the height and length of a building increase, the cumulative movements at the top or ends of the structure increase. The movements of exterior walls can affect the interior partitions on upper floors resulting in distress to, or cracking of, the partitions. Non-structural components at the building interior must be detailed to allow for volume change movements of exterior precast concrete structural walls. If non-structural elements, such as drywall ceilings, or interior drywall or masonry partitions are attached to wall panels unrestrained against bowing, those items should be attached with "soft" or flexible connections.

Where loadbearing and non-loadbearing panels meet (for example, at the corners of a building) it is possible

that differential volume change movements may occur. If connections are employed that restrain these movements, it is likely that the connections will attempt to transfer significant vertical forces. Structural behavior of the building at corners where panels meet requires specific attention and should be designed for volume change movement forces as well as for other structural forces.

Design consideration of panels meeting at corners should include the influence of temperature differentials due to sun exposure on the panel connections. Depending on the exterior panel color and plan orientation of the building, 9 to 14 °F (5 to 8 °C) temperature differentials may develop in elements that are in direct sun versus those that are shaded.

4.2.4.1 Deformations

Deflection of a panel support is a function of the stiffness of the support. Where adjacent panels are supported on different portions of the building frame with differing stiffnesses, relative deflections between adjacent panels may occur. This is often the case at building corners, where the structural arrangement may result in significantly different support stiffnesses. It is also a concern where the structural frame cantilevers. If panels are attached in a manner that tends to prevent relative displacement, developed panel stresses must be evaluated.

The weight of a series of small panels supported on a long span flexible beam is shown in Fig. 4.2.1. The support beam will deflect (or rotate) in increments as each panel is erected, resulting in an in-plane rotation of the panels previously erected, which may cause unintended restraint forces to develop in the longitudinal direction. Alternatively, this problem could be solved by providing a single bearing connection for each panel or connecting panels at or close to columns. The EOR should design the supporting beam with minimal vertical deformation so that the precast concrete erector can erect the panels to be level and at the correct final elevations without having to reset or realign panels (see also discussion in Section 2.5 on wall-supporting panels).

Loading from other sources may also cause a deflection-related problem. For example, if precast concrete is erected prior to floor slab construction, the weight of the floor may deflect the support beam and cause a problem similar to the one shown in Fig. 4.2.1. The connections should be designed to allow the supporting beam to deflect, but the beam should be stiff enough that panel joint widths remain within the specified tolerances.

Because of the difficulty in detailing these connections and erecting panels on a flexible support, it is generally preferable to provide panels that span from column to column. In the case where the wall panels or spandrels are supported by the columns, the primary concern for deflection is the control of cracking and potential distress in the joint between the wall finish and the floor finish. Because the wall and floor (or roof) are supported independently, they are loaded and deflect independently. The acceptable range of movement depends on the finishes, but, for example, typical office occupancy finishes can tolerate vertical differential movement on the order of $^1/_4$ to $^1/_2$ in. (6 to 13 mm). The appropriate load to use in calculating this deflection is 50% of the design live load. Lastly, the cladding tieback connec-

Fig. 4.2.1 Deformation of panels on flexible beam.

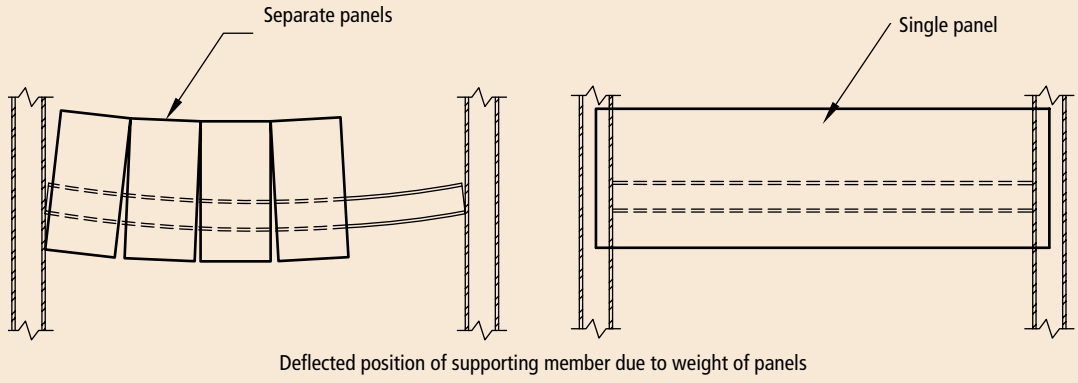

tions must be detailed to accommodate the range of vertical movement at the building perimeter.

In the case of relatively light cladding, that is, when the load from the panel plus window system is less than or equal to 25% of the total load on a steel spandrel support beam, the following limits apply. The recommended limit on steel spandrel beam dead load deflection prior to erecting the cladding are span length (in inches) divided by 480 with an absolute limit of $^3/_8$ in. (10 mm). The loads appropriate to this calculation are those in place prior to cladding. The deflection due to all dead loads including the cladding plus window system should be limited to span length divided by 480 with an absolute limit of $^5/_8$ in. (16 mm).

The deflection limits for live load are based on the movement allowed by the detailing of the completed cladding plus window system.

Although large movements could theoretically be accommodated, common detailing practice would allow for movements in the range of $^1/_4$ to $^1/_2$ in. (6 to 13 mm). These deflections would be the net allowable movement after accounting for the dead load placed after the cladding and window system is completed. In relative terms the live load deflection should be limited to span length divided by 360. The portion of design live load used depends on the expectation of its presence and could vary between 50 and 100% of the total design live load.

When the panel and window system weight exceeds 25% of the total dead load on the steel spandrel beam, different limits apply. In this case, the critical dead load deflection is due to the dead load in place at the time of cladding plus the dead weight of the wall system itself. The deflection due to these loads should be limited to span length divided by 600 with an absolute limit of $^3/_8$ in. (10 mm).

The deflection limits for dead loads imposed after cladding and live loads are the same as for the case of relatively light cladding. They are:

- Additional dead load: span length divided by 480 with an absolute limit of $^5/_8$ in. (16 mm).
- Live load: span length divided by 360 with an absolute limit in the range of $^1/_4$ to $^1/_2$ in. (6 to 13 mm).

It should be noted that these limits are set by the allowable movements in the joints and connections. Thus, for the most part, camber of the steel beam is not a means to address these concerns. The only exception would be deflection prior to installation of cladding. However, these loads and deflections are relatively small in magnitude and probably would not justify cambering the beams.

Bowing due to temperature differences between the inside and outside of a wall panel is the most prevalent cause of panel deformation after placement of the precast concrete panel in the structure. Panels generally will bow outward. If supported in a manner that will permit bowing, the panel will not be subjected to stress as a result of the bowing. However, if the panel is restrained laterally at the middle, bowing restraint stresses in the panel and forces in the structure will occur.

Non-loadbearing panels that contain openings, such as window panels, may develop stress concentrations at these openings, resulting from unintended loading or restrained bowing. Figure 4.2.2 illustrates the profile of a panel that tends to deflect outward due to warming of the exterior surface. Experience indicates that if the panel is restrained on all four edges, hairline cracking radiating from the corners of the opening may develop. While these stress concentrations may be partially resisted by reinforcement, the designer should always consider methods of eliminating imposed restraints. Good design practice requires that areas with abrupt changes in cross-section be reinforced and should be rounded or chamfered whenever possible.

Moisture differences between the inside and outside of an enclosed building can also cause bowing; however, the calculation to determine the magnitude of bowing from this effect is much less precise and involves more variables. The exterior layer of the concrete panel absorbs moisture from the atmosphere and periodic

Fig. 4.2.2 Cracking due to restrained bowing.

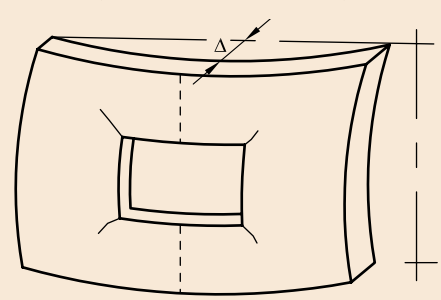

precipitation, while the interior layer is relatively dry, especially when the building is heated. This causes the inside layer to shrink more than the outside, causing an outward bow. The outward shrinkage bowing would tend to balance the theoretical inward thermal bowing in cold weather, which is believed to explain the observation that "wall panels always bow out."

While the magnitude of bowing is usually not significant, in the case of wall panels it may cause unacceptable separation at the corners (Fig. 4.2.3) and damage to joint sealants. It may therefore be desirable to restrain bowing in these locations with one or more connectors between panels.

Fig. 4.2.3 Corner separation due to thermal bow.

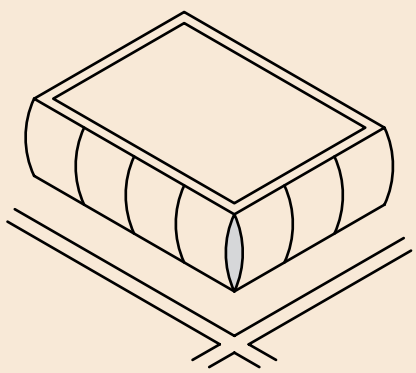

Non-loadbearing panels should be designed and installed so they do not restrain frames from lateral translation. If such restraint occurs, the panels may tend to act as unintended shearwalls (significant diagonal compression may occur) and become overstressed. To prevent this, panels that are installed on a frame should be connected in a manner to allow frame distortion (connected at the top and bottom only and left free along the sides). In some cases, especially in high seismic regions, special connections that allow movement may be required. The space between the panel and the supporting frame required for erection will usually be sufficient to prevent contact during lateral deformation of the frame.

Frame shortening of buildings and its affect on precast concrete panels is only of concern if it produces a differential movement between the building cladding and the structure. There is little cause for concern if the building and the precast concrete cladding move approximately the same amount. However, this seldom occurs.

For low-rise and mid-rise buildings, column shortening is of little concern. For high-rise buildings, the column shortening related to the structure's dead load often takes place before the cladding system is installed. Any shortening due to cladding loads and floor live loads should be determined and documented, and evaluated in the context of the panel connections and joint details. Consideration should also be given to the timing of the erection process. If column shortening is a design consideration, it should be determined and documented by the building's structural engineer.

The vertical shortening of concrete columns should be considered when structures are tall. A 40-story, cast-in-place concrete building can shorten as much as 5 to 6 in. (125 to 150 mm) during and after construction. Each of the floors exhibits a proportional shortening. These shortenings are cumulative for the height of the structure. At each level, the differential shortening between two adjacent floors is a small amount that can be accommodated by the cladding panels. At the lowest level, if the panel is rigidly supported at the base (such as a foundation or transfer girder) and the panels are stacked to support the wall above and tied into the structure, the gradual shortening of the structure above may induce unintended loading on the panel. In such cases, the panel connections and joints should be designed to permit the calculated deformation. The full shortening of concrete columns may take several years, although a major proportion occurs within the first few months after construction. Frame shortening must be considered to determine true fabrication elevations. Unless this is done, panel heights may not match the structural frame and connections will not line up. Panel connections must line up at the time of erection and there must be sufficient space at the joints to compensate for future movement.

A similar design situation will occur when two adjacent columns have significantly different loads. For example, the corner column of a structure will usually be subjected to a smaller load than the adjacent columns. If both columns are the same size (as is often the situation for architectural reasons) and reinforced approximately the same, they will undergo different shortening.

If adequate clearance is not provided between the precast concrete panels and the support structure, or if the connections do not allow for unrestrained movement, loads from adjacent floors can be imposed on non-loadbearing panels. These loads can cause ex-

cessive stresses at the "beam" portion of an opening (Fig. 4.2.4). This condition can be prevented by locating connections away from critical sections. Unless a method of preventing load transfer, such as slotted angle connections, can be developed and permanently maintained, the "beam" should be designed for some of the floor loads. Determining the magnitude of such loads requires engineering judgment.

4.2.4.2 Column covers and mullions

The use of precast concrete panels as covers over steel or concrete columns and beams is a common method of achieving architectural expression, special shapes, or fire rating and specific finishes in an economical manner. Column covers and mullions are usually supported by the structural column or the floor, and are themselves designed to transfer no vertical load other than their own weight. The vertical load of each length of column cover or mullion section is usually supported at one elevation, and tied back at the top and bottom to the floors for lateral load transfer and stability. In order to minimize erection costs and horizontal joints, it is desirable to make the covers or mullions as long as practical, subject to limitations imposed by weight, handling, and story drift.

Connections must allow for relative horizontal movement between floors. This may cause the column covers to rock back and forth between bearing connections. The length of a column cover will be dependent on transportation and lifting limitations, architectural considerations, and the ability of the structural column to support a specific concentrated load (panel weight) locally.

Mullions are vertical elements serving to separate glass areas. Because mullions generally resist wind loads applied from the adjacent glass, they must be stiff enough to maintain deflections within the limitations imposed by the window manufacturer. With these thin flexible members, consideration should be given to prestressing to prevent cracking.

Column covers and mullions are usually major focal points in a structure, and aesthetic success requires that careful thought be given to all facets of design and erection. The following are some items that should be considered:

1. Because column covers and mullions are often isolated elements forming a long vertical line, any variation from a vertical plane is readily observable. This variation can be the result of the tolerances allowed in the structural frame. To some degree, these variations can be handled by precast concrete connections with adjustability. The architect should plan adequate clearance between the panel and structure to allow the tolerances of the structural frame to be accommodated. For steel columns, the architect should consider the clearances around splice plates and projecting bolts.
2. Gravity support should be provided by two bearing points at only one elevation and connections at additional locations for lateral loads and stability. When access is available, consider providing an intermediate connection for lateral support and restraint of bowing.
3. Column covers and mullions that project from the façade will be subjected to shearing wind loads. The connection design must account for these forces.
4. Members that are exposed to the environment will be subjected to temperature and humidity change. Horizontal joints between abutting precast con-

Fig. 4.2.4 Unanticipated loading on a non-loadbearing panel.

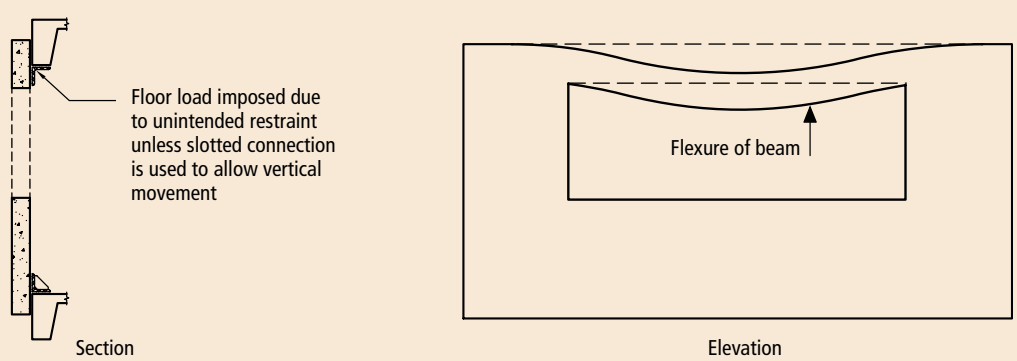

crete column covers and mullions should be wide enough to permit length changes and rotation from temperature gradients. The behavior of thin flexible members will be improved by prestressing.

5. Due to vertical loads and the effects of creep and shrinkage, cast-in-place concrete columns will tend to shorten. The width of the horizontal joint between abutting column covers and mullions should be sufficient to permit this shortening to occur freely as well as handle rotation from temperature gradients.
6. The designer must envision the erection process. Column cover and mullion connections are often difficult to reach and, once made, difficult to adjust. The difficulty of access is compounded when all four sides of a column are covered by several column cover units to obtain the full height. Sometimes this condition can be solved by welding the lower piece to the column and anchoring the upper piece to the lower with dowels, or by a connection that does not require access.
7. Insulation may be placed on the interior face of the column cover, or alternatively, it may be applied to the structural column directly. Such insulation will reduce heat loss at these locations and also minimize temperature differentials between exterior columns and the interior of the structure. Connections details must be chosen to accommodate either choice.
8. Column covers or mullions can be combined with adjacent spandrels to minimize number of units and joints. Alignment of rustications on the column covers with the horizontal details on the spandrel panel is facilitated.
9. Where uniformity of architectural finish is required on two or three sides of column covers, the designer should be guided by a precaster regarding the feasibility of this requirement. For example, to ensure uniformity of finish, it may be necessary to segmentally cast the units. Consultation with a precaster is recommended.

4.2.5 Design Considerations for Loadbearing Wall Panels

Most of the items for non-loadbearing wall panels also must be considered in the analysis of loadbearing wall panels.

The design and structural behavior of exterior architectural precast concrete bearing wall panels is dependent upon the panel shape and configuration, and should consider the following:

1. Gravity loads and the transfer of these loads to the foundation. Vertical (gravity) loads are parallel to the plane of the wall at an eccentricity influenced by the geometry of the wall, location of load, and manufacturing and erection tolerances.
2. Magnitude and distribution of lateral loads perpendicular to the plane of the wall (wind and seismic) and the means for resisting these loads using shearwalls and floor diaphragms. Loads in the horizontal direction may be both parallel to and perpendicular to the plane of the wall. For typical precast concrete structures, improved redundancy and ductility are achieved by connecting members into a load path to the lateral-load-resisting system. The load path in the lateral-load-resisting system must be continuous to the foundation.
3. Location of joints to control volume change deformations due to concrete creep, shrinkage, and temperature movements; influence upon design for gravity and lateral loads; and effect on nonstructural components. The volume change effects will usually only be significant in high-rise buildings, and then only differential movements between elements will significantly affect performance of the structure. This can occur, for example, at the corner of a building where loadbearing and non-loadbearing panels meet or at re-entrant corners.
4. Connection concepts and types of connections required to resist the various applied loads. In some cases, local practice may suggest one type of connection over another, for example, use of bolts rather than welds. Welded connections need to be accessible to allow efficient welding.
5. Tolerances required for the structure being designed with regard to production and erection for both precast concrete units and connections, including tolerances for interfacing different materials.
6. Specific design requirements during the construction stage that may control designs, such as site accessibility.

The design of exterior walls using loadbearing architectural panels does not differ from two-dimensional frame design, once the panel is isolated and taken as a free body. Accepted design procedures and code re-

quirements apply to the design of the wall. Perhaps the only design consideration difference is recognizing the role precast concrete panel production and erection play in the overall design process. Similarly, usual accepted procedures and code requirements apply to the design of an individual precast concrete panel and its components.

Wall panel size and shape can be affected by the details and locations of the vertical and horizontal panel-to-panel connections. Both gravity load transfer between panels and gravity and axial load combinations caused by lateral loadings or size of window openings can become the major factors influencing panel structural dimensions and connection design. Although, for most precast concrete exterior bearing-wall structures, it will be found that the gravity dead and live load condition will control structural dimensions of a panel rather than load combinations that include lateral loads. Portions of walls with large openings may be subjected to significant axial loads. These portions may require reinforcement with closely spaced ties.

Often the mullion size of the panel will not be controlled by the minimum concrete area required by design. Rather, minimum dimensions for grouting panels at horizontal joints and for placing reinforcement, space for locating handling devices, or space required to accommodate a variety of connection conditions may determine mullion sizing.

Panels may be designed to span horizontally between columns or vertically. Whether or not the architectural panel of the exterior wall is placed horizontal or vertical depends primarily on the methods or details selected for transferring loads and making connections. When spanning horizontally, they are designed as beams or, if they have frequent, regularly spaced window openings as shown in Fig. 4.2.5(a), as Vierendeel trusses. If a large portion of the panel is window opening, as in Fig. 4.2.5(c), it may be necessary to analyze it as a rigid frame. When the panels are placed vertically, they are usually designed to be similar to columns. Because of the large height-to-thickness ratios and the magnitude and eccentricity of the loads, the in-place stresses may control the design.

A horizontal Vierendeel truss–type panel lends itself to simple handling because it can be shipped in its erected position. It requires vertical load transfer connections at each story level, and requires only minimal erection handling and bracing.

Fig. 4.2.5 Horizontal and vertical rib panels.

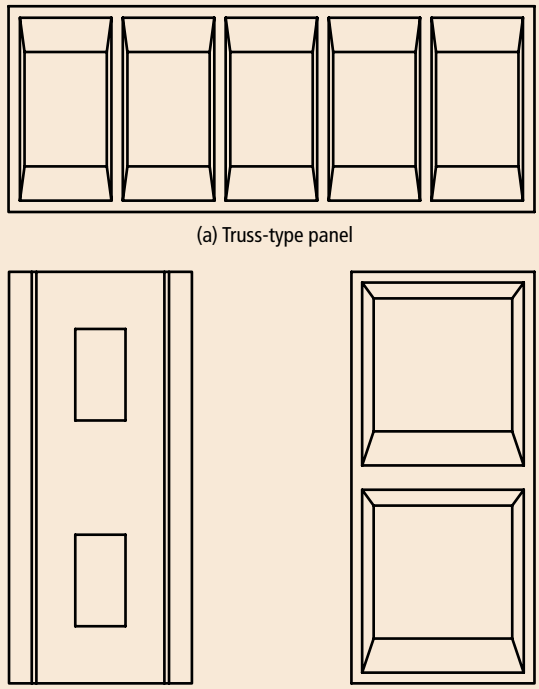

A two-story vertical panel requires additional design considerations for erection handling because it needs to be rotated from its shipped postion during erection. Figure 4.2.5 shows architectural wall panels, generally used with relatively short vertical spans (although they may sometimes span continuously over two or more floors).

When stemmed floor or roof members are used, the width of loadbearing walls or spandrels should module with the double-tee width. In other words, for 12 ft (3.7 m) double tees, walls should be 12, 24, or 36 ft (3.7, 7.3, and 11 m) wide. Local precast concrete producers should be contacted for the availability of a particular module.

Dimensions of architectural panels are usually selected based on a desired appearance. When these panels are also used to carry loads, or act as shearwalls, it is important to have some engineering input in the preliminary architectural design stages of the project.

4.2.6 Design Considerations for Non-Loadbearing Spandrels

Non-loadbearing spandrels are precast concrete ele-

ments that are less than story height, made up either as a series of individual units or as one unit extending between columns. Support for the spandrel weight may be provided by either the floor or the columns, and stability against eccentric loading is usually achieved by connections to the floor or the column (Fig. 4.2.6).

Spandrels are usually part of a window wall; therefore, consideration should be given to limiting the vertical deflections and rotations of the spandrel to that consistent with the requirements of the window manufacturer. Spandrels are also commonly used as vehicle-impact restraints in parking structures in addition to providing perimeter design features. Doing so eliminates the need for an upturned cast-in-place beam or cable system.

For spandrels that extend in one piece between columns (usually 20 to 60 ft [6 to 18 m]), it is preferable that the gravity supports be located on or near the columns. This arrangement will minimize interaction and load transfer between the floor and spandrel, which reduces the structural framing costs. Column sections are generally very stiff vertically, resulting in minimal deformations, and can be readily designed to resist the eccentricity of panel weight.

While structural steel frames tend to have good dimensional control, rotation and deflection as controlling parameters of the design for the steel support beams are much more common than for concrete framing. The structure should be designed to resist torsional rotation, due to eccentric loadings on perimeter beams by the EOR. The steel frame designer must consider this flexibility and design for the forces transferred to the frame through the connections. The EOR should clearly specify connection points when flexibility is of concern. Otherwise, the precast concrete design engineer will need to verify with the EOR rather than assume that the structure has sufficient rigidity to allow spandrels to be erected without subsequent realignment and to allow deformations to be limited to those specified for the spandrels.

When precast concrete spandrel panels are supported on edge beams, it is desirable to design gravity connections to transmit the loads to the beam centerline. This is often not practical because of the large resulting eccentricities created and the large connections that are difficult to conceal. It is often preferable to provide gravity supports for the precast concrete panels at the columns. It is preferable to cantilever a slab or steel bracket from the side of the panel support beam to allow gravity support close to the back of the spandrel. This may cause torsion in the support beam that must be recognized from both a strength and stiffness perspective. Similarly, when tieback connections are made to the underside of a steel beam, the frame designer (EOR) should make provision for torsional loading by specifying heavier members, braces, or gussets. Tie-

Fig. 4.2.6 Forces on a spandrel panel.

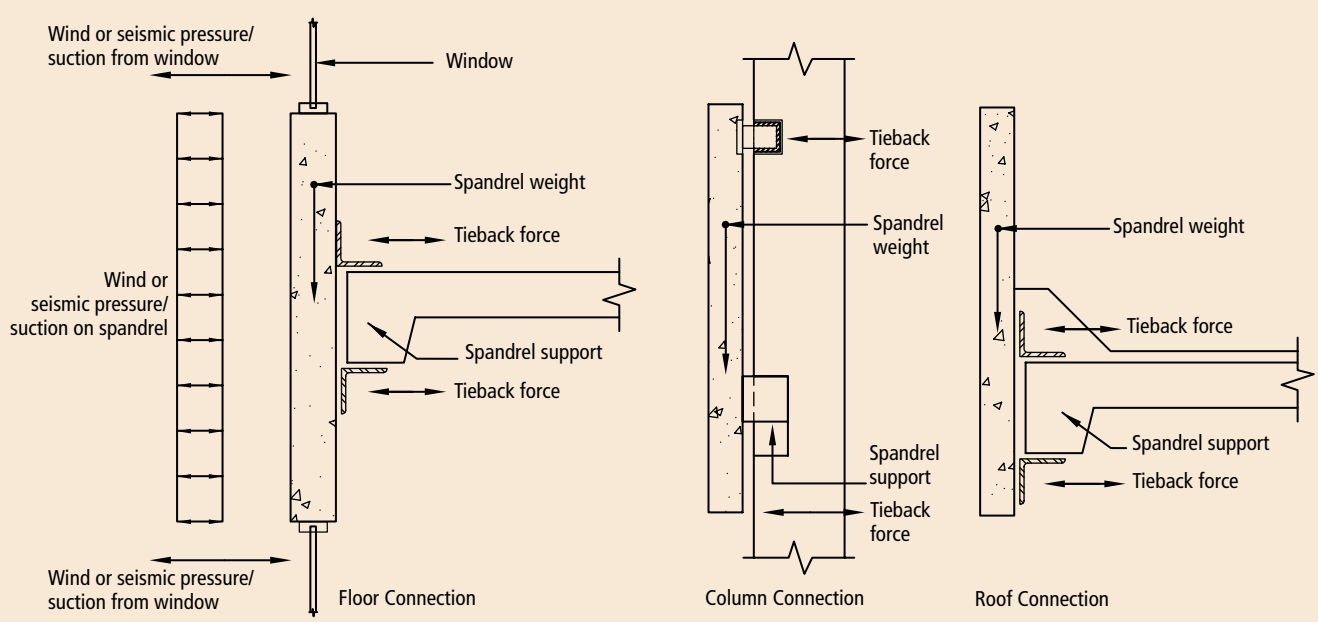

backs to columns may require stiffeners be added to resist local bending. The EOR needs to understand the effects of localized tieback connections so those stiffeners can be detailed and supplied with the structural steel.

If the deflection of the structural frame is sensitive to the location or eccentricity of the connection, limits on connection eccentricity should be given on contract drawings and also shown on the erection drawings. This is particularly important for heavy members bearing on light members, such as open web joist or cantilevered structural members.

The weight of a series of wall panels supported on a flexible beam will cause deflection (or rotation) of the edge beam. To prevent imposing unintended loads on the panel, the connections must be designed and installed to permit these deformations to occur freely. The advantages of wall panels spanning between columns (see Section 2.5) become apparent in steel structures, where these units may be supported directly off the columns. They may also help to balance the load on the columns.

Consideration should also be given to spandrels that are supported at the ends of long cantilevers. The EOR must determine the effects of deflection and rotation of the support, including the effects of creep, and arrange the details of all attachments to accommodate this condition (Fig. 4.2.7). A particularly critical condition can occur at the corners of a building.

When panels supported on cantilevers are adjacent to panels supported in a different manner, differences in deflection of the supporting structure may result in joint tapers and jogs in alignment. The possibility of increased deflection and rotation of the panel over time, resulting from creep of the supporting cantilever, must also be considered.

Connections may be detailed to allow for final adjustment after initial erection. However, normal erection procedures assume a panel can be set and aligned without returning for later adjustment. Often the best way to deal with this condition is to use a support scheme that does not rely on cantilever action (Fig. 4.2.8[a & b]). The bracing supports in Fig. 4.2.8 are normally supplied and erected by the structural steel or miscellaneous steel subcontractor prior to precast concrete erection.

Fig. 4.2.7 Effect of cantilever supports.

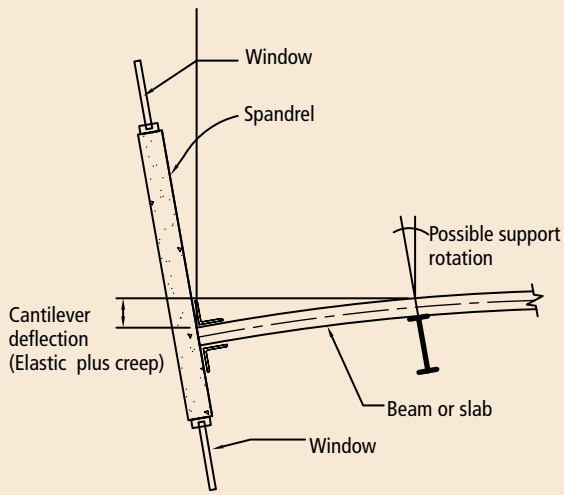

Fig. 4.2.8(a) & (b) Bracing support.

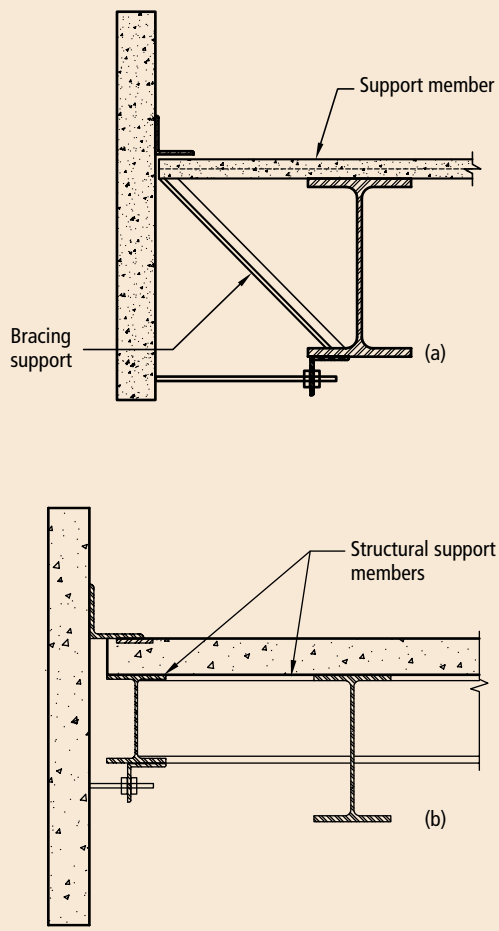

Spacing of lateral supports for a spandrel should not exceed 50 times the least width of compression/flange or face. However, the spans of non-loadbearing spandrels on parking structures have frequently exceeded 50 times the width of the top of the member, and no problems have been observed. This is undoubtedly because they typically carry only their own weight, which is concentric. Where lateral (vehicle impact) loads are applied to the spandrel, lateral support of the spandrel into the deck are typical.

Because the contract bid documents (drawings and specifications) are the first line of communication between the designers of record and the precast concrete design engineer, it is imperative that the documents clearly indicate the connection concept. For example, if spandrel loads are to be resisted by the columns rather than the floor beams, it must be indicated on the contract documents. This intent can be shown schematically and further described in applicable notes. Also, the division of responsibilities for providing and installing items, such as miscellaneous steel used to stabilize those structural members that support precast concrete elements, must be clearly indicated in the contract bid documents. The stability of a completed structure for lateral loads is typically the responsibility of the EOR.

4.2.7 Design Considerations for Loadbearing Spandrels

Loadbearing spandrels support floor or roof loads. Except for the magnitude and location of these additional loads, the design considerations are the same as those for non-loadbearing spandrels.

Loadbearing spandrels support structural loads that are usually applied eccentrically with respect to the support. A typical arrangement of spandrel and supported floor is shown in Fig. 4.2.9. Loadbearing members loaded non-symmetrically may be subject to both internal and external torsion. If the resulting applied load is not coincident with the member's shear center, torsion will exist along the span of the member. Torsion due to eccentricity must be resisted by the spandrel.

Potential rotation due to eccentricity is usually resisted by a horizontal couple developed in the floor construction or by a coupled connection to supporting columns. In order to prevent rotation of the spandrel, the details must provide for a compressive force transfer at the top of the floor and a tensile force transfer at the bearing of the precast concrete floor element. The load path of these floor forces must be followed through the structure and considered in the design of other members in the building. Because of the stresses that may develop due to volumetric changes, tensile connections parallel to the span at the bottom surface of both ends of a floor member should not be used. Even when torsion is resisted by a couple in the floor elements in the completed structure, twisting of the spandrel during erection prior to completion of connections must be considered. Spandrels that are pocketed to receive stems of the double-tee floor or roof

Fig. 4.2.9 Loadbearing spandrels.

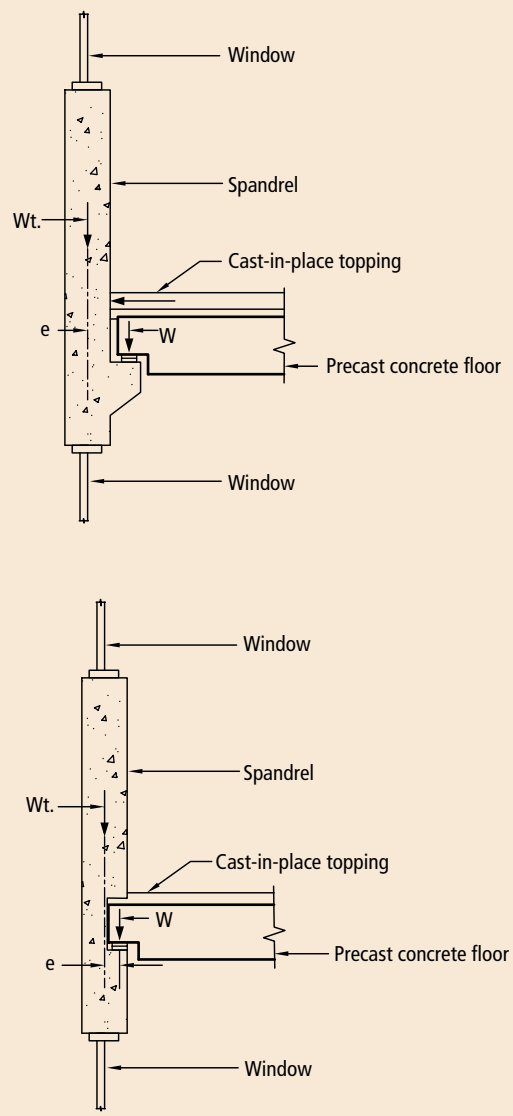

slabs decrease torsion stresses greatly, as well as minimize twist and eccentricity during erection.

If torsion cannot be accommodated by floor connections, the spandrel panel should be designed for the induced stresses. Non-prestressed reinforced concrete members subject to torsion should be designed in accordance with the applicable provisions of the *PCI Design Handbook* (MNL-120) and ACI Building Code (ACI 318), Chapter 11. Prestressed members subject to torsion should be designed in accordance with the applicable provisions of the *PCI Design Handbook* and ACI Building Code, recognizing that the member is simply supported and capable of dissipating torsion effects into the diaphragm and connections.

Many precasters will choose to provide additional connections along the length of a spandrel to prevent cracking under anticipated gravity and lateral loads. Adding unnecessary tiebacks is not advisable due to the resulting build-up of restraint forces.

A loadbearing spandrel could be connected to a floor or roof diaphragm (part of the lateral-load-resisting system) in more than one way. Structural integrity is typically achieved by connecting the spandrels into all or a portion of the deck members forming the diaphragm, which in turn would be connected to the supporting beams and the beams would be connected to their supporting columns. Alternatively, the spandrel could be connected only to its supporting columns, which in turn must then be connected to the diaphragm.

4.2.8 Design Considerations for Stacking Non-Loadbearing Panels

Architectural precast concrete cladding panels are usually independently supported. That is, each panel has its own set of gravity and lateral connections to secure it to the building's structural frame. Gravity load is supported by the building columns and/or beams and, thus, is transferred to the foundation. In most buildings, it is usually preferable to support panels in the previously described manner.

However, there are some building types where it is beneficial to take advantage of concrete's inherent strength and make the architectural concrete cladding self supporting. Only lateral tieback connections are made to the building's frame for lateral stability. This design may provide economic benefits in structures where the exterior columns are set back from the edge of the floor. One such building type is the suburban office building, which is usually a two- to six-story steel-braced frame building. The exterior cladding consists of horizontal spandrels and vertical column covers that are very repetitive in size, shape, and layout. The vertical column covers can be designed to support the weight of the spandrels, glass, and any other gravity loads being carried by the stacked spandrels.

There are several advantages to stacking precast concrete cladding panels to support multiple stories. The building frame can be lighter and less expensive because it resists the wind or seismic loads and does not have to carry the weight of the precast concrete panels. Bearing brackets welded to the structure that are required to individually support the panels are expensive; these are eliminated when panels are stacked.

There are some precautions to take when using the stacking method. In the vertical direction, all of the vertical thermal volume change movements accumulate at the top of the building. The designer must make sure that precast concrete joint sizes and building details allow for this without causing detrimental effects. The horizontal spandrel panels should hang on the side of the column covers and not bear on top of them (Fig. 4.2.10). This allows the spandrels to move freely and accommodate axial volume change forces. Because it is generally not desirable to grout joints between architectural panels, the gravity loads should be transferred through shims. Shim sizes must be of the appropriate size to keep bearing pressures to an acceptable level. The joint at the bottom of column covers should, however, be grouted if bearing pressures are high. Cladding panels should not be stacked in high seismic risk areas where large in-plane building movements can occur (the design must allow for building drift). Braced frames in low seismic risk areas typically do not have appreciable lateral drift, making stacking panels acceptable.

In low seismic risk areas, horizontal deflection of the superstructure frame is only of moderate concern because the steel frame can drift and the simple-span behavior of the panels is preserved. The critical detail is the behavior of the joints in the corner. The wall parallel to the direction of movement does not move, whereas the wall perpendicular to the movement is dragged along by the frame movement. Thus, story drift limits in the range of height divided by 100 are appropriate with 10-year wind loads. If the precast concrete walls

Fig. 4.2.10 Stacked panels.

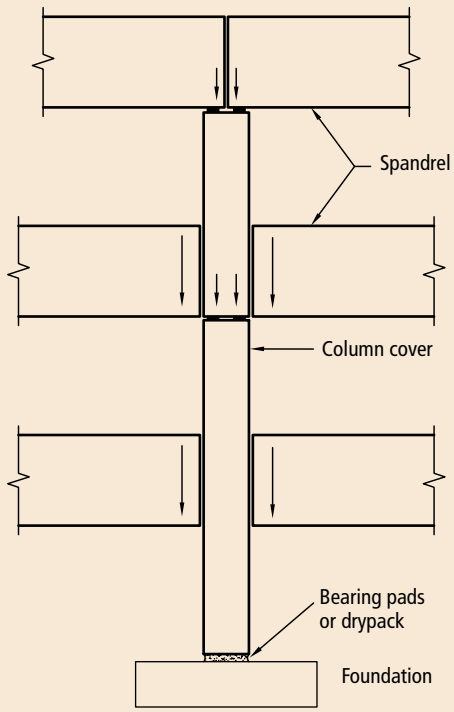

are buried (in lieu of a foundation wall), drift must be limited to control cracking because these panels are rotationally restrained at their bases.

4.2.9 Dimensioning Of Precast Concrete Units

As a general rule, precast concrete panels should be made as large as possible without creating special handling requirements or losing repetition. Flat panels should not be made any thicker than necessary for economical and/or weight reasons. Neither should they be made so thin that structural or performance requirements cannot be fulfilled. Because of the multitude of combinations of sizes, functions, applications, and finishes, no chart for sizing has been attempted. However, here are some considerations for optimum dimensioning.

The panel cross-section is generally chosen for architectural or aesthetic reasons. A panel that is too thin may bow or deflect excessively, thereby creating caulking problems at the building corners or fit-up and leakage problems at attached windows, (see Table 4.6.1, page 350).

The smaller the unit, the greater the number of pieces required for enclosure. More pieces usually means more handling, more fastening points, and higher erection costs. Therefore, large units are preferable unless they lack adequate repetition, which increases forming costs or incur significant cost premiums for transportation. The widths of the panels are usually dictated by architectural considerations or the structural grid of the building frame. The maximum size of individual units requires consideration of production repetition, handling ease, shipping equipment required, erection crane capacity, and loads imposed on a support system. When desired, the scale of large panels may be reduced by using reveals or rustication joints (Fig. 4.2.11).

Panels with a height of two or three stories are used for low-rise buildings because of the simplicity of the construction system. This may result in larger structural sections in order to limit handling stresses during manufacture. For high-rise buildings it may be more expedient to work with story-height panels; the panels can be more slender and the erection more simple.

Structural considerations, such as in-service loads, will rarely govern, unless the panels are loadbearing or where special conditions require a large spacing between connections. For most precast concrete exterior bearing wall structures, except for tall, slender panels, the gravity dead and live load condition will control panel dimensions rather than load combinations, which include lateral loads. Minimum dimensions for grouting panels together at horizontal joints, space for placing reinforcement, locating handling devices, or accommodating a variety of connection conditions can determine the minimum dimensions.

Reasonable slenderness ratios—minimum thickness over unsupported length (the least distance between members that provide lateral support [connections], when in final position)—for flat panels should be:

- $^1/_{20}$ to $^1/_{50}$ for panels that are not prestressed.
- $^1/_{30}$ to $^1/_{60}$ for panels that are prestressed.

Higher ratios are feasible, but must be modified to account for panel end fixity, deflection limitations, or applied loads. However, all but the lowest slenderness ratios should be subject to a careful structural and performance analysis. For example, a more thorough analysis is required in those buildings without effective shearwalls for lateral loads or when walls are subjected to large bending moments. Other types of walls, such as window walls, should be individually designed.

Fig. 4.2.11
Albert G. Hill Building, One Hampshire Street, Cambridge, Massachusetts;
Architect: Ellenzweig, Moore and Associates;
Photo: ©1985 Steve Rosenthal.

For large, slender flat panels, the possibility of improving structural capacities and overall performance by prestressing should be considered. The 7 in. thick (175 mm), 35ft long column covers in Fig. 4.2.12 were prestressed because it was more economical than mild reinforcement.

Handling loads at the plant and during erection may be minimized by special handling techniques, such as tilt tables, vacuum lifting, cradles, or special lifting frames. The precaster will normally endeavor to use these methods rather than thicken the panels. The shape of the member must provide (1) proper thickness of concrete to develop insert capacities for handling and for connections, (2) adequate cover of reinforcement, (3) ease of production, and (4) proper thickness for the aggregate size used.

Practical considerations may govern thickness in order to provide concrete cover and accommodate aggregate sizes. Many surface treatments such as retarded finishes will reduce the cover and influence the minimum thickness. Attention must also be given to scoring or false joints in flat panels, where the required minimum dimension should be measured from the back of the panel to the bottom of the groove. Panel thicknesses less than 4 in. (100 mm) may create problems for the installation and proper concrete cover of lifting and connection anchoring devices. Therefore, a 4 in. (100 mm) thick panel is the practical minimum thickness.

Performance requirements, such as sound attenuation, fire-rating, and the desired tolerances for planeness of façades, may govern minimum thicknesses of flat panels. Sound insulation requires a sufficient mass of concrete, which may govern thickness unless additional wall features help to dampen sound.

Rather than increasing the overall thickness of panels, consideration may also be given to ribbing the panels. Ribs may be part of the architectural expression or, where flat exposed surfaces are required, ribs may be added to the back of panels for additional stiffness. Stiffening ribs on the back may also be used as corbels to transfer vertical loads to the structure.

Sculpturing of precast concrete units may increase their structural strength. Such sculpturing may increase the depth-to-span ratio by providing ribs or projections in either direction of a unit. Contrary to common belief, reasonable sculpturing of a precast concrete cladding unit will not constitute a cost premium where

Fig. 4.2.12
Corporate Center, Franklin, Tennessee;
Architect: Little Diversified Architectural Consulting Inc.;
Photo: Marshall Bassett.

Fig. 4.2.13 Optimum handling sequence of precast concrete units.

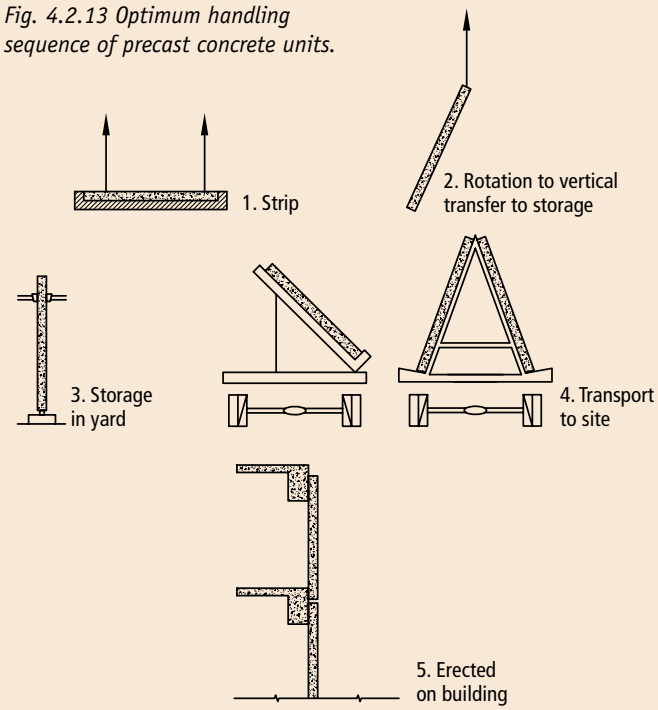

Fig. 4.2.14 Hoisting and rotating multi-story units.

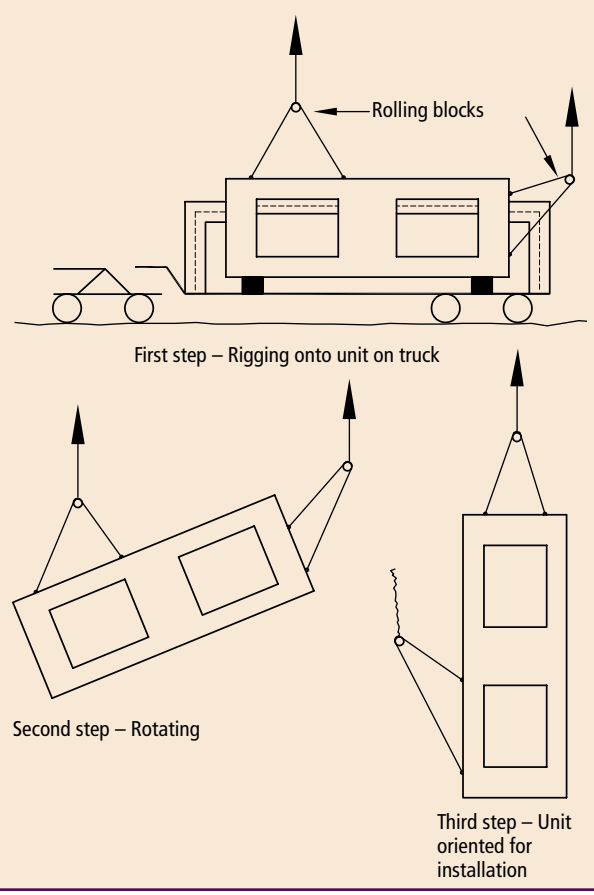

sufficient repetition of the unit will keep mold costs within reason and where the sculpturing will aid the unit's structural capacity. For further details refer to Section 3.3.4.

4.2.10 Handling and Erection Considerations

Design consideration must be given to installation conditions for the project with respect to handling, transportation, and hoisting. This must be done before sizes, shapes, and other features are finalized because erection equipment will frequently influence panel size. Preplanning for the fewest, quickest, and safest possible operations that should be performed before releasing the crane will greatly increase efficiency of erection.

Transportation limitations have already been described in Section 3.3.10. Information on erection procedures can be found in *PCI Erectors' Manual–Standards and Guidelines for the Erection of Precast Concrete Products* (MNL-127).

The precaster is generally responsible for designing panels for handling stresses and for the design of the handling inserts. Units should be handled in a manner to avoid structural damage, detrimental cracking, or aesthetic impairment.

The optimum solution for economical handling is the ability to strip a unit from the mold and tilt it into a vertical position similar to the position of the unit in its final location on the building (Fig. 4.2.13). This solution is not possible when units are several stories high (see Sections 2.4, 2.5, and 2.6). Such units may be stored and shipped on their long side and handled at the jobsite by rotating the units in the air with rolling blocks (Fig. 4.2.14).

An important consideration in designing toward optimum erection costs—a significant portion of total installed cost—is to provide suitable access for trucks and mobile equipment at the jobsite and sufficient room and proximity to the structure to allow erection to proceed. Suitable access requires level, stable, and well-compacted and maintained roadways or approaches and consideration for snow removal. At the pre-job conference, arrangements for jobsite access, onsite storage areas, and other items affecting transportation should be made with the GC or CM. Site conditions should allow erection and transportation equipment to

proceed under their own power to a location (directly adjacent to the building) where precast concrete members can be handled by the erection equipment directly from the transportation equipment onto the structure. Configuration of the building or adjacent buildings and underground services or spaces may prevent erection equipment from operating efficiently and may, in some cases, require double handling of the units. The constraints of the site may determine the maximum size and weight of panels that can be lifted into position.

It should be noted that cranes are rated by the safe capacity they can lift with the shortest boom and at the steepest boom-up angle. Maximum lifts for a given capacity crane will reduce rapidly as boom length increases and the angle changes, and the designer should, if possible, consider this during the planning stage. For example, it is not advisable to design heavy units for a high-rise building extending from a parking or shopping plaza unless truck and equipment access to the tower is ensured, at least until the units have been installed on the tower, (Fig. 4.2.15). Erecting a panel set back on a roof, such as a mechanical-equipment screen, may be problematic. As the crane's boom lays down to reach over a parapet, its capacity quickly decreases. The entire job could be penalized by these few difficult lifts, which could have been avoided had the erection methods been considered. Early coordination of design and realistic erection plans are essential for the overall economy of precast concrete.

To avoid unrealistic or impossible erection conditions, a review of the project by the designer with the precaster and erector is beneficial. The erector should state the requirements for handling and erecting the members in the safest and most economical manner. The designer should give careful consideration to all the factors that affect the methods that can be used in the construction of the project and prepare the design to best suit jobsite conditions.

The precasters, in preparing their design, must first determine where the lifting devices should be placed. Lifting points should be compatible with the method of shipping (flat or on edge) and placed so that the rigging does not interfere with the structural frame. The same lifting devices should be used on the various precast concrete units so that frequent rigging changes can be avoided. Only one type and size of lifting device should be used in a precast concrete unit (bolted devices should not be used at one end and lifting loops

Fig. 4.2.15 Access for trucks and hoisting equipment.

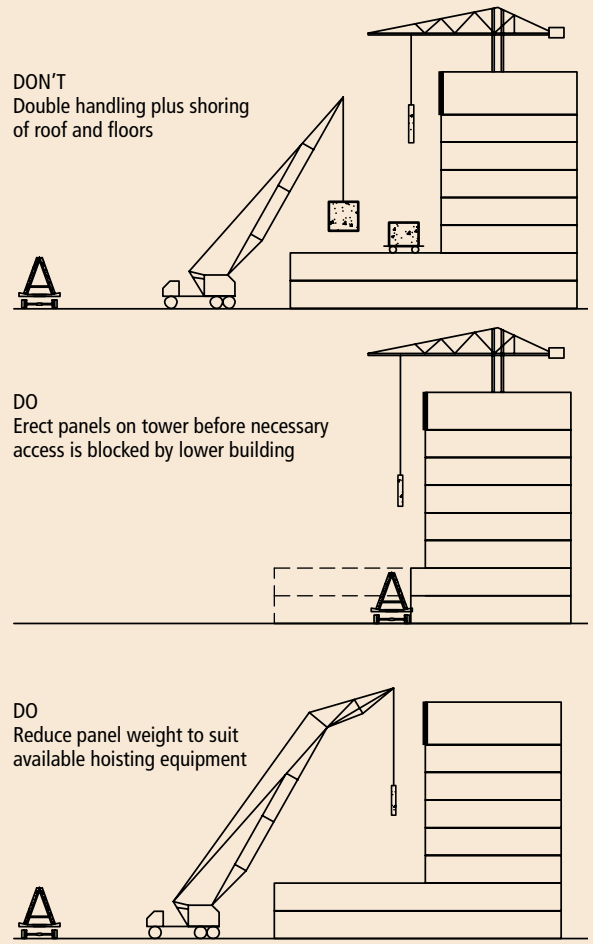

at the other end of the unit). One set of lifting devices is required for handling and erection, and another may be needed for stripping. Lifting devices should be designed for actual loads plus an impact factor that depends on the panel configurations and finishes. Locating all lifting devices on the erection drawings allows a check for interference with other functions or with finishing requirements.

Erection inserts cast in precast concrete members vary depending on the member's use in the structure, the size and shape of the member, and the precast concrete manufacturer's or erector's preference.

Ideally the unit should be moved into position on the building without having to be pulled back at the top or the bottom of the unit. On occasion, the building configuration or the precast concrete unit may be shaped so that a special hoisting or setting jig must be con-

Fig. 4.2.16(a)

Fig. 4.2.16(b)

structed to hold or "cradle" the unit for setting (Fig. 4.2.16a). These devices have been employed with success and economy where conditions justify their cost.

All temporary lifting and handling devices cast into the members should be dealt with as specified on the erection drawings based on one or more of the following conditions:

1. Removed where they interfere with other trades.
2. Removed and surfaces patched where demanded by appearance requirements.
3. Removed or protected from possible corrosion and marring of the finished product where not exposed to view.
4. No action required.

If possible, the placing of lifting and handling devices should be planned so that little or no patching will be required after use. However, when the lifting and handling devices are located in finished edges or exposed surfaces, bolt or insert holes require filling and patching. Often, these devices may be recessed, filled, and finished at a later date with prior designer approval. However, specialized lifting equipment may be necessary to eliminate the necessity of patching exposed lifting and handling devices. A spreader bar with C-hooks can be used to erect architectural precast concrete panels without using exposed inserts (Fig. 4.2.16b).

Depending on local practice, the assignment of responsibility for the erection of precast concrete generally varies in the following manner:

1. The precaster is contractually responsible to the GC and/or owner for the supply and erection of the precast concrete products. Erection may be performed by in-house labor or by an independent erector hired by the precaster.

2. The precaster is responsible only for the supply of the precast concrete product, F.O.B. plant, or jobsite. Erection is performed by either the GC/CM or by an independent erector under a separate agreement with the GM/CM and/or owner.
3. The precaster is responsible for the supply of the product to an independent erector who has a contractual obligation with the GM/CM and/or owner to furnish and erect the complete precast concrete structure.

On projects where precasters do not have the contractual obligation for erection, it is beneficial to the project if they assign representatives to observe, coordinate, and report on erection activities. It is recommended that the precaster maintain sufficient contact with the firm(s) responsible for both transportation and erection to ensure that the precast concrete units are timely delivered, properly handled, and erected according to design and project specifications. Erection of architectural precast concrete should only be performed by qualified erectors employing workers who are properly trained to safely handle and install the product. Safety procedures for the erection of precast concrete members are the responsibility of the erector, and must be in accordance with all rules and regulations of local, state (province), or federal agencies that have jurisdiction in the area where the work is to be performed.

Proper planning of the construction process is essential for efficient and safe erection. The sequence of erection must be established early and the effects accounted for in the bracing analysis and the preparation of shop drawings.

Generally, procedures to ensure stability during erection, such as bracing or temporary connection details, should be developed by a licensed engineer or competent person engaged by the precaster or the erector. Depending on the requirements of the local jurisdiction, the design sometimes requires review by the EOR and/or building official.

Erection drawings define the procedure on how to assemble the components into the final structure. When required, the erection drawings should also address the stability of the structure during construction and any temporary connections required. When temporary bracing, guying, or shoring is required, additional bracing drawings are recommended. These should show items such as specific erection sequence, bracing hardware and procedures, and instructions on removal. Shoring and bracing should be installed as designed. Units should never be left in an unsafe condition at any time. Removal of temporary bracing and shores is not permitted until proper alignment and adequate permanent support has been provided or until it has been authorized by the EOR to do so.

After erection, each panel must be stable and offer resistance to wind, accidental impact, and loads that may be imposed due to other construction operations. Seismic forces during erection are usually only considered when the time of unsupported erection condition will be unduly prolonged or when dislodgement could cause progressive collapse. Inserts for attaching bracing are normally cast into the backs of the panels, but may be field-drilled. Temporary bracing should be arranged so as not to interfere with other members being erected and other construction processes, and the bracing must be maintained until permanent connections are accomplished. The single-story loadbearing panels shown in Fig. 4.2.17 are temporarily braced until the connections are welded and floor or roof structural elements are installed. It is desirable that each precast concrete element be braced independently of other elements, so that an element may be moved, if necessary, without affecting the adjacent element. When possible, the final connections should be used to provide at least part of the erection bracing, but additional bracing apparatus is sometimes required to resist all of the temporary loads. (Note: Only one brace per panel is shown as the panel has already been welded to adjacent panel.)

The type of jobsite handling equipment selected may influence the erection sequence, and, therefore, affect the temporary bracing requirements. Several types of erection equipment are available, including truck-mounted and crawler mobile cranes, hydraulic cranes, tower cranes, monorail systems, derricks, and others. *PCI Erectors' Manual* (MNL-127) provides more information on the uses of each.

Mobile cranes are most commonly used on buildings up to about six-stories high, where access is adequate and reasonable. Mobile cranes can handle larger panels than tower cranes. Monorail systems, fed by booms and hoist or by cranes, are sometimes used by erectors for buildings above 16 or 20 stories and where relocation of rails can be made in jumps of at least 10 to 15 stories. The use of either of these hoisting systems can

Fig. 4.2.17

operate independent of other trades requiring hoisting operations.

When tower cranes are used for setting precast concrete units, their reach and capacity may determine the panel maximum weight. Tower cranes, require more than the usual planning because their structures, foundations, and presence on the site are generally permanent for as long as heavy construction phases are on-going. The use of tower cranes may have a significant effect on the planning of the structural frame and the sequencing of construction, which should be considered during the planning stages of the structural frame. Scheduling problems may be encountered unless firm time allocations for separate trades can be maintained by the general contractor. Some erectors occasionally make use of nighttime hoisting with tower cranes, transferring units to block and tackle equipment or setting them temporarily for final placement or alignment during daylight hours. Stiff-legs or elevators, combined with power buggies for transport across floors, and many other handling innovations have been developed for specific jobs.

Consideration should be given to the location of project man hoist(s) and material hoist(s) on high-rise towers. If the hoist(s) is located where precast concrete panels are to be placed, these panels will have to be lifted off of the building and erected later with a large, expensive mobile crane with sufficient reach to the top of the building. Alternately, pre-planning the location of the hoist(s) at a window-wall location will minimize or eliminate expensive panel erection at the hoist bay area.

Hoisting and setting the precast concrete units are usually the most expensive and time consuming processes of erection. Speed of erection is directly related to the type of connections selected and the arrangement of the building frame. It is highly desirable that connections allow for initial setting of the panel and immediate release of crane, with final alignment completed independent of crane support.

Structural limitations governing the erection and/or bracing sequence should be stated on the contract drawings or in the specifications. Limitations may state, for example, that loading of the structure shall be bal-

anced, requiring that no elevation be erected more than a stated number of floors ahead of the remaining elevations; or limitations may involve the rigidity of the structure, requiring that walls should not be erected prior to completion of floors designed to carry lateral loads. In steel frames, it should be determined how far ahead final connections of the frame must be completed prior to panel erection. In concrete frames, it must be determined what concrete strength is required prior to imposing loads of the precast concrete panels.

The EOR should also recognize that connections between panel and frame impose concentrated loads on the frame and that these loads may require supplementary local reinforcement. In the case of multistory concrete frames, consideration should be given to the effects of frame shortening due to shrinkage and creep. Delay in erecting precast concrete panels to permit a portion of the shrinkage and creep to occur may be beneficial. For panels that are supported on a continuous bed of grout (such as in loadbearing wall construction), the maximum number of floor levels that can be erected using only shims should be determined and, if critical, indicated on the contract drawings. Where an erection analysis is not performed by the EOR, or when it is not the responsibility of the EOR, the contract documents should name the responsible party.

Erection procedures for precast concrete members will vary depending on the size, shape, and design of the members, the structural elements that will receive or support them, and the overall complexity of the structure. Typical rigging arrangements are shown in Fig. 4.2.18 for architectural precast concrete panels. Figure 4.2.18(a) shows the use of one rolling block, while (b) shows the use of two rolling blocks. A spreader beam is shown in (c) and the use of an equalizing rolling block is shown in (d).

4.2.10.1 Wall panels

Panels should be shipped, whenever practical, to the jobsite in a position so that turning is not required. Wall panels should be rigged and hoisted onto the structure near their final location and held in place until safely secured. Final alignment and gravity and lateral connections may be made at once or later by another follow-up crew, depending on the type of connection.

The connections should be designed to allow for easy adjustment in all directions. Panels should be installed on a floor-by-floor basis where practical, to keep loading equal on the structure. It may be more economical to minimize crane movement and finish an elevation as much as possible prior to moving the crane.

Fig. 4.2.18(a - d) Typical rigging arrangements.

Fig. 4.2.19 Balance beam.

When wall panels are to be set back into the face of the building under an overhanging structure, the panels cannot be picked up from above. These erection difficulties may often be overcome by proper planning or the use of specialized equipment. Temporary openings in floors above, or suitable scheduling of other trades, can alleviate such difficulties. Whenever possible, contract documents should facilitate such provisions. Special equipment, such as a balance beam (flying jib) with a movable or fixed counterweight, may be used to erect the panels without causing damage or defacing the exposed surface (Fig. 4.2.19).

Consideration during construction for the stability of a loadbearing structure is required during planning for erection. Erection stability can sometimes be built into the design of loadbearing elements. It may be possible to design the foundations and anchor bolts to withstand the forces generated from wind and temporary forces caused by construction procedures. If base connections do not provide sufficient stability for columns and walls to be left free-standing, temporary guying and/or bracing should be provided until final structural stability is achieved. It is desirable to start erection from a laterally stable area, such as a corner wall or stair tower.

Base connections for multistory loadbearing panels are normally achieved by weld plates or grouted mechanical sleeves. The walls may also be post-tensioned vertically using high-tensile strength bars that couple at pockets at the base of the panels at each floor level. The base of the panels should be grouted or drypacked before the next level of floor slabs is erected. Panel bases should be grouted or drypacked prior to vertical post-tensioning unless sufficient shims are provided. The grout should achieve its required strength prior to post-tensioning. For panels that are supported on a continuous bed of grout the maximum number of floor levels that can be erected using only shims should be determined by the precast concrete design engineer and, if critical, indicated on the erection drawings.

Structural stability of loadbearing panels is normally achieved through connections to floor and roof diaphragms with high-capacity connections at stair walls, elevator shafts, or other shearwall locations. All bracing should remain in place until stability is achieved by completing connections and diaphragm is in place.

4.2.10.2 Columns

Leveling nuts provide the simplest method for erecting columns because the full load of the column can be let off the crane and the column plumbed by adjusting the level of the nuts. The column is braced and then the crane is released. The base plate and double nut method is high in hardware costs but provides tolerance for out-of-place anchor bolts as the base-plate holes may be slotted or made oversize.

The preferred procedure for heavy loads is a column base plate with a single shim pack centered under the column. The shims take full load and the anchor bolts and nuts serve to stabilize the column. An advantage is that the columns can be loaded immediately.

As panels and floor slabs are erected, columns can start to bow or lean due to eccentric loading. Checking of column plumbness and providing adequate shoring are particularly important when using pretopped tees. The heavier load of the pretopped members increases the tendency for columns to come out of plumb. To maintain a plumb condition, columns usually have guy cables and/or pipe braces that allow the erector to plumb and stabilize the column prior to, during, and after the installation of upper-level beams and floor slabs.

If columns are eccentrically loaded, they are often erected slightly out of plumb on the side opposite the eccentric load so that the eccentric load will bring them back to plumb when fully loaded. The amount of "out-of-plumb" is determined by trial and error for each project and type of column. The column size, height, and design affect its deflection under load.

4.2.10.3 Spandrels

Precast concrete spandrels usually extend from column line to column line at the building perimeter. They connect either at the columns or the perimeter beams. Spandrels, whenever practical, should be shipped to the jobsite in the vertical position. Shoring or bracing may be required to assist in erection until connections are made.

Alignment and all gravity and lateral connections should be made final, or the spandrels should be safely secured, prior to releasing the load and disconnecting the rigging. Long spandrels may be tied back at the center, if required by the design of the member, to minimize panel bowing. Spandrels may be required to be installed on a floor-by-floor basis to keep equal loading on the structure, although this approach may not be the most economical. It generally is more economical to minimize crane movement and finish an elevation, as much as possible, prior to moving the crane.

Spandrels should be aligned to predetermined offset lines established for each floor level. Vertical dimensions between spandrels should be checked with a story pole or similar device to ensure that opening size is within allowable tolerance.

4.2.10.4 Column covers and mullions

Column covers are usually manufactured in single-story units and extend either from floor to floor or between spandrels. However, units two or more stories in height may be used. Column covers and mullions are usually shipped in the horizontal position. Two lines may have to be used to rotate the member.

Column covers and spandrels are often erected sequentially. Caution should be used so that one member does not stress another.

When spandrel panels or column covers and mullions are interspaced with strips of windows to create a layered effect of glazing, precast concrete, and glazing, the GC should work closely with the designer to arrive at interface details that are able to be built within the sequence of construction, and embody all the elements required of exterior wall design.

4.2.10.5 Soffits

Soffit units are normally erected under perimeter beams to form an architectural closure. To achieve this, special erection equipment is usually required.

Precast concrete soffits are normally shipped to the jobsite in the horizontal position. All of the erection methods are costly, time consuming, and require a great deal of pre-planning and preparation. Consideration should be given to combining soffit and spandrel in a single unit.

4.2.10.6 Protection during erection

Rainwater, or water from hoses used during the construction of the building, can cause discoloration of exposed precast concrete by first washing across other building materials (such as steel, concrete, or wood) and then across the precast concrete. The GC should provide and maintain temporary protection to prevent damage or staining of exposed precast concrete during construction operations. Particular care should be taken to avoid jobsite water washing over the precast concrete. Dirt, mortar, plaster, grout, fireproofing, or debris from concrete placement should not be permitted to remain on the precast concrete and should be brushed or washed off immediately with clean water. If required, the final cleaning of the precast concrete units should take place only after all installation procedures, including repairs and joint caulking, are completed.

Precast concrete units and adjacent materials, such as glass and aluminum, should be protected from damage by field welding or torch cutting operations. Therefore, the sequencing of work of other trades should be taken into consideration by the GC/CM to prevent such damage. Non-combustible shields should be used during these operations. To minimize staining, all loose slag and debris should be removed when welding is complete. All welds and exposed or accessible steel anchorage devices should be painted with a rust inhibitive primer, or in cases of galvanized plates, a cold galvanized coating (zinc rich paint containing 95% zinc). Such protection should be applied immediately after cutting or welding.

Apart from emphasizing care by the precaster, erector, GC, and other trades, the architect during actual construction has little direct control over potential staining, but may add the following recommendation as part of the specifications:

"All staining and damage caused by other than the precaster (such as oil from cranes and compressor lines, bitumen from roofing operations, or smearing by

caulking or painting contractors) should be repaired by the precaster or by qualified personnel using methods approved by the precaster under the responsibility of the general contractor."

Such repairs cannot be part of the precaster's contract, and the precaster should be compensated for repairing any damage caused by others following supply of the precast concrete (or erection, if part of the contract).

4.3 CONTRACT DOCUMENTS

The architect's contract documents (drawings and specifications) should define the scope and intent of the work required. These documents should supply the information described in Section 4.1.2.

These documents should enable the precaster to design for the forces that the architectural precast concrete units must resist. This and other sections of Chapter 4 should be thoroughly studied so that those parties preparing the contract drawings understand the required scope of those documents.

Translation of the design concepts into contract drawings is relatively simple for typical units. Particular attention must be paid to situations where non-typical conditions are encountered. These conditions may include outside and inside corners, intermediate roof levels, non-typical floors (such as ground level or mechanical floors), and entrances. Such details should not be overlooked. Contract drawings should not be open to different interpretations. Confusion may increase costs during bidding, production or erection.

If design modules and master mold concepts are not maintained during detailing, additional cost factors may be introduced. The designer is advised to maintain liaison with local precast concrete manufacturers because their services may be particularly valuable during the development of working drawings. The final and exact dimensions of all precast concrete units should exactly replicate the preliminary design, subject to an assessment of feasibility of all salient details.

Information in the contract documents should be sufficient to enable the precaster to produce the shop drawings to identify the information needed for precast concrete erection (coordination) drawings and translate these details into precast concrete product and erection requirements.

The designer should give sufficient details or descriptions on the drawings to clearly indicate all exposed surfaces of the units and their respective finishes. This is particularly important for returns and interior finishes. The finish may be identified on the drawings by coded numbers, by different shadings of the areas representing exposed surfaces, or by any other method that remains readable after printing or possible reduction of the drawings. To simply thicken the exposed surface lines has proven less than satisfactory unless carefully executed.

Holes, within agreed size limitations, in architectural wall panels for other trades should be made by the precaster at the manufacturing plant and consequently should be detailed and located on the contract drawings.

The use of isometric sketches often makes it simpler to visualize details, particularly in the case of non-typical conditions. By making such isometric sketches part of the working drawings, the designer greatly facilitates the interpretation of the project requirements.

Precaster's shop drawings (erection and production drawings) translate project contract documents into usable information for accurate and efficient manufacture, handling, and erection of the precast concrete units. These drawings are prepared under the control of the precaster and should be prepared in general conformance to *PCI Drafting Handbook–Precast and Prestressed Concrete* (MNL-119) and the project specifications.

The first step in preparing the shop drawings necessary for a project is a thorough review of the contract documents (plans and specifications) to determine all the factors that can influence decisions regarding the precast concrete. The goal of this analysis is to produce standardization of precast concrete units, and note any modifications required of precast concrete units, connections, shop production techniques, handling methods, and erection plans. Aside from the general architectural shape requirements, the main factor in establishing standardization of the units is the building frame and its relationship to the architectural units, connection locations, tolerances, and clearances.

Erection drawings should include all precast concrete member piece marks, completely dimensioned size and shape of each member, note the location of each member with respect to building lines and/or column lines and finished floors, and provide the details and locations of all connections from member to member or member to structure. Anchor drawings, which show

the location of hardware supplied by the precaster to be placed by the GC, should be prepared by the precaster. Joints and openings between precast concrete members and any other portion of the structure should be identified. These drawings are not necessarily intended to show or describe procedures for building stability during erection. When temporary bracing is required, additional bracing drawings are recommended. These may show such items as sequence of erection, bracing hardware and procedures, and instructions on removal.

Some precasters prepare in-house shop (production) tickets from shop drawings, listing schedules of precast concrete units. Others produce separate drawings of each individual and different unit from typical master mold units. When erection drawings contain all information sufficient for design approval, production drawings (except for shape drawings) need not be submitted for approval, except in special cases. When, the architect requests record prints, the number required should be stated in the specifications.

Specifications should state the number of copies of erection drawings required for approval. Electronic submissions may be requested.

Generally, shop (erection) drawings are submitted to the GC who, after checking them and making notations, submits them to the design team for checking and review. The drawings are routed to the subcontractors who must then check and coordinate their related work. Final approved shop drawings are returned to the precaster by way of the GC. The GC is responsible for the project schedule, tolerances and dimensions of the building frame, and coordination of the precast concrete work with the work of other trades. Timely review and approval of shop drawings and other pertinent information submitted by the precaster is essential. Fabrication should not commence until final approval or "approved-as-noted" has been received. If shape drawings are submitted separately, approval must be obtained to allow fabrication of molds and tooling. Alternatively, shop drawings may be approved initially for mold production and subsequently for panel production.

Because mold production requires the greatest amount of production lead time, the common goal of both the architect and the precaster at the shop drawing stage is to expedite all the details regarding the size and shape of the precast concrete panels.

If stone veneer is to be incorporated into the precast concrete, coordination between the precaster and stone veneer supplier is required. The manufacture of stone veneer panels requires a long lead time in order to maintain the schedule. It is a common practice to submit a preliminary set of shop drawings for stone sizes and details for approval prior to submitting final precast concrete erection drawings for approval. This allows the stone fabricator adequate fabrication time to ensure a steady flow of stone to the precaster. Separate subcontracts and advance awards often occur in projects with stone veneer panels. It is suggested that the precaster detail all precast concrete units to the point where the veneer fabricator is able to incorporate details, sizes, and anchor holes for individual stone pieces.

While these procedures may affect normal submission routines, it is not intended that responsibilities for accuracy be transferred or reassigned. In other words, the precaster is responsible for precast concrete details and dimensions and the stone veneer fabricator should be responsible for stone details and dimensions.

The architect reviews the precast concrete manufacturer's erection drawings primarily for conformance to the contract documents, then passes them along to the EOR for review of conformance to the specified loads and connection locations. This allows the engineer to confirm his or her own understanding of the forces on the structure at the connection points and the precaster's understanding of the project requirements. Design details, connection locations, and specified loads cannot be left to the discretion of the precaster. It is especially important in cladding panels, where for example, a spandrel might weigh 20 tons (18t) and its weight distribution imposes torsion and shear forces onto the frame.

Eccentricity of weight can cause deformation of the structure. To install the cladding within the specified tolerances, the structure must be strong and stiff enough to resist both gravity and lateral forces without excessive deflection.

"Approved" and "Approved-As-Noted" shop drawings normally mean that the GC has verified dimensions to be correct and final for the following: overall building dimensions, column centerlines, floor elevations, floor thicknesses, column and beam sizes, foundation elevations, the location of mechanical openings, and other items pertinent to architectural precast concrete. It also means that the design team

has reviewed the precast concrete submission for general conformance with the design requirements of the contract documents. Approval does not extend to means, methods, techniques, sequences, or procedures of construction, or to safety precautions and programs incident thereto, unless specifically required in the contract documents.

Shop drawings will provide the GC and other trades with a means of checking interfacing with adjacent building materials and the precaster's interpretation of the contract drawings. They reduce plant costs and speed production by providing effective communications between the architect and the production/erection departments of the precast concrete manufacturer. The correct transfer of information from the contract documents is the responsibility of the precaster.

4.4 REINFORCEMENT

4.4.1 General

In designing architectural precast concrete panels, it is desirable that there not be any discernible cracking. In some cases, cracking may be permitted but the crack width must be limited (see Section 3.5.17). When a reinforced concrete element is subjected to tensile stresses (likely due to flexure), the amount and location of reinforcing steel has a negligible effect on member performance until a crack has developed. As stresses increase, hairline cracks may develop and extend a distance into the element. If cracks are narrow, the structural adequacy of the element will remain unimpaired.

In members in which concrete stresses are less than the allowable tensile stress during service, distributed reinforcement is needed to control cracking that may unintentionally occur during fabrication, handling, or erection and also to provide ductility in the event of an unexpected overloading. In members in which the stresses are expected to be greater than the allowable concrete tensile stress, conventional or prestressed reinforcement is required for satisfactory service load performance, adequate safety, and to meet aesthetic requirements. Reinforcement may serve any one of these purposes in architectural precast concrete.

The types of reinforcement used in architectural precast concrete wall panels include welded wire reinforcement, bar mats, deformed steel bars, and prestressing and post-tensioning tendons. Secondary reinforcement may include an epoxy coated carbon fiber grid. Random fibers, which are sometimes used to control shrinkage cracks, do not have well defined structural properties and, therefore, cannot be used to replace structural reinforcement. Non-prestressed reinforcement is normally tied or tack welded together into cages by the precaster, using a template or jig when appropriate, unless the precast concrete unit is a simple flat panel (see Section 4.4.6). The cage, whether made for the entire casting or consisting of several sub-assemblies, must have sufficient three-dimensional stability so that it can be lifted from the jig and placed into the mold without permanent distortion. Also, the reinforcing cages must be sufficiently rigid to prevent dislocation during consolidation of the concrete in order to maintain the required cover over the reinforcement. The size of reinforcing bars is often governed by concrete dimensions and the required concrete cover over the steel.

Reinforcement, in addition to that needed for structural reasons, is required to control thermal movement and shrinkage, and the cracking that these might otherwise cause. As a general rule, bar sizes should be kept reasonably small (No. 3 thru 6) even where this will reduce the spacing of the bars (increase the number of bars). Smaller bars closely spaced will decrease the size of potential cracks and improve distribution of temperature stresses better than fewer, larger bars that are widely spaced. The use of additional smaller diameter reinforcing bars as compared with fewer, heavier bars becomes more important in thin concrete sections. Because the sum of the widths of potential cracks in concrete is more or less constant for a given set of conditions, the more well distributed cracks there are, the smaller and less visible they will be.

In non-prestressed applications, the recommended maximum spacing of reinforcement in wall panel wythes exposed to the environment is three times the wythe thickness (18 in. [460 mm] maximum) for reinforcing bars, while common spacing for welded wire reinforcement is 6 in. (150 mm). The size and spacing will be function of strength requirements and crack-control criteria.

Large reinforcing bars create other problems, as well. They often require anchorage lengths and hook sizes that may be impractical, making supplemental mechanical anchorage necessary. Because reinforcing bar termination points act as stress raisers and potentially cause shrinkage cracks, it is often better to use

welded cross bars or other types of mechanical anchorage when the bars are large relative to the concrete thickness, rather than rely on bond alone. Connection details with reinforcing bars crossing each other require careful dimensional checking to ensure sufficient cover.

Good bond between the reinforcing bar and the concrete is essential if the bar is to resist tension forces and keep cracks small. Therefore, the reinforcing bar surface must be free of materials that impair the bond between the concrete and steel, including loose rust. Mill scale that withstands hard-wire brushing or a coating of tight rust is not detrimental to bond.

The minimum reinforcement contained in each wythe of non-prestressed members should be 0.001 of the cross-sectional area of the wythe in each direction, except as otherwise required by analysis or experience. Panels exposed to the environment that are less than 2 ft (0.6 m) wide in one direction may not need to be reinforced in that direction — 4 ft (1.2 m) for panels not exposed to the environment.

The reinforcing steel should be placed as symmetrically as possible about the panel's cross-sectional centroid. This is particularly true for flat and delicately shaped panels. Non-symmetrical placement may cause panel warpage due to restraint of drying shrinkage or temperature movements. Panels with a concrete thickness of less than 8 in. (200 mm) may have reinforcement placed in one layer; however, two layers of equivalent weight are recommended to control concrete cracking in thicker panels during handling. Strict quality control is necessary to ensure adequate minimum cover is provided for all reinforcement, particularly in thin panels and delicately shaped units. Suitable production techniques should be used to maintain this location during placement of the concrete. Reinforcing bars should not be bent sharply around corners, especially in slender sections. Reinforcing bars should preferably terminate beyond an intersection of bars to ensure proper anchorage.

Typical stirrups are not recommended for slender sections. They cannot always be bent accurately or to a radius small enough to properly locate the main bars. Bending difficulties and tight clearance tolerances make the proper cover very difficult to achieve when stirrups are used in wall panels. Precast concrete units may contain attachment and lifting devices, as well as prestressing steel anchorages, along with their associated reinforcement. The congestion that this additional steel may cause, in conjunction with the normal reinforcement, should be given careful consideration.

If possible, reinforcing cages should be securely suspended from the back of the molds because spacers may mar the finished surfaces of the panels. Metal chairs, with or without coating, should not be used in a finished face.

4.4.2 Welded Wire Reinforcement

Welded wire reinforcement (WWR) is the most common type of reinforcement used in architectural precast concrete. One or more layers of WWR may be used as the main reinforcement or supplemented with reinforcing bars in ribs and where otherwise required to provide the area of steel required. WWR used in architectural precast concrete is required to comply with requirements of *Building Code Requirements for Structural Concrete* (ACI 318). WWR is available in a wide range of sizes and spacings, making it possible to furnish the cross-sectional steel area required almost exactly. Two sizes, a heavy and a light WWR, will usually suffice for most architectural precast concrete projects. The most common sizes of WWR used by precasters are 4 x 4–W4 x W4 (102 x 102–MW26 x MW26) to 6 x 6–W2.9 x W2.9 (152 x 152–MW19 x MW19). Different sizes may be considered standard depending on geographic areas.

Welded wire reinforcement for architectural precast concrete is supplied in flat sheets. Reinforcement from rolls, if used in thin precast concrete sections, must be flattened to the required tolerances. Many precast concrete plants have the capability of accurately bending WWR to desired shapes, increasing its usefulness in large members. Because the WWR is closely and uniformly spaced, it is well suited to control cracking. Furthermore, the welded intersections ensure that the reinforcement will be effective close to the edge of the member, resisting cracking that may be caused by handling.

There is no specific ASTM specification for galvanized WWR; however, *ASTM A641, Zinc Coated (Galvanized) Carbon Steel Wire* is used as a reference. The amount of zinc coating on wire reinforcement is rarely specified for galvanized WWR. Galvanized wire can be produced with thicknesses of zinc coating ranging from 0.30 oz/ft^2 (107 g/m^2) to 2.0 oz/ft^2 (610 g/m^2) for different grades and wire sizes.

4.4.3 Reinforcing Bars

Deformed mild-steel reinforcing bars are also used extensively in architectural precast concrete. Deformed reinforcing bars are hot-rolled from steels with varying carbon content. Deformed bars conforming to ASTM A615, *Deformed and Plain Billet-Steel Bars for Concrete Reinforcement*, are generally available in No. 3 through No. 11 in Grade 60 (420 MPa). Selection of grades of reinforcing steel is determined by the structural design of the precast concrete units. For bars that are to be welded, ASTM A706, *Low-Alloy Steel Deformed Bars for Concrete Reinforcement*, specifies a bar with controlled chemistry that is weldable with less preheat than A615. Availability should be determined before ASTM A706 bars are specified.

4.4.4 Prestressing Steel

Prestressing may be used to minimize cracking of members by applying a precompression in the concrete that counteracts the tensile stresses generated by the self weight and applied loads. Prestressing may be either pretensioning or post-tensioning. In either case, the prestressing force should generally be concentric with the effective cross-section. It is recommended that prestressing in a panel, after all losses, be limited to the range of 150 to 600 psi. (1.0 to 4.1 MPa). A minimum of 225 psi (2.0 MPa) is required to be classified as a prestressed unit.

Prestressing in concrete panels may be used as partial reinforcement for the following reasons:

1. Structural requirements for in-service loads.
2. Units are to be supported near the top and it is desired to maintain the concrete in compression. Units that are suspended should usually have light welded wire reinforcing in both faces to counteract the effects of tensile stresses. Alternatively these units may be prestressed to provide a nominal residual compressive force.
3. Units are slender, and prestressing is chosen to facilitate handling without undue tensile stresses.
4. For general crack control, for example, handling and erection of long (greater than 20 ft [6m]) insulated panels.

The belief that prestressing will reduce or control bowing or warping is, in some cases, a misconception. Unless tendons are located accurately (concentric with the effective cross-section) and are securely maintained in that location during casting, prestressing may actually increase the occurrence of bowing. Because panels tend to bow outward due to thermal and shrinkage effects, and because outward bowing is generally more objectionable than inward, some precasters choose to force a slight inward initial bow by adjusting the location of the prestressing force.

Numerous wire, strand, and high-strength bar prestressing materials are available that are suitable for architectural precast concrete. Strands are commonly used in both pretensioned and post-tensioned applications. They are manufactured in two grades to conform to ASTM A416, *Uncoated Seven-Wire (Low-Relaxation) Strand for Prestressed Concrete*. High-strength, specially treated bars used as prestressing tendons are covered by ASTM A722, *Uncoated High-Strength Steel Bars for Prestressing Concrete*. Uncoated, stress-relieved wires meeting the requirements of ASTM A421 can be used in post-tensioned tendons. Unless prestressing is required for in-service load or performance, the choice of using this type of reinforcement should be left to the precast concrete manufacturer.

A light bond coating of tight surface rust on prestressing tendons is permissible, provided strand surface shows no pits visible to the unaided eye after rust is removed with a non-metallic pad.

In order to minimize the possibility of splitting cracks in thin, pretensioned members, the strand diameter should preferably not exceed the values in Table 4.4.1:

Table 4.4.1 Maximum strand diameter in wythe thicknesses.

Wythe thickness, in. (mm)	Strand diameter, in. (mm)
less than 3 (75)	$^3/_8$ (10)
3 (75) and thicker	$^1/_2$ (13)

When exposed to view, tendon anchorages (stressing pockets) should be recessed and packed with a minimum of a 1 in. (25 mm) thickness of low shrinkage, non-metallic, concrete or grout and receive a sack finish. Prior to installing the pocket material, the inside concrete surfaces of the pocket should be coated or sprayed with an epoxy or latex bonding agent. This seal should be adequately covered for curing because shrinkage and contraction cracks allow access points for moisture penetration and developing points for corrosion. When not exposed to view, the anchorage and strand ends should be completely coated with a rust

Fig. 4.4.1 Example of post-tensioned wall panel.

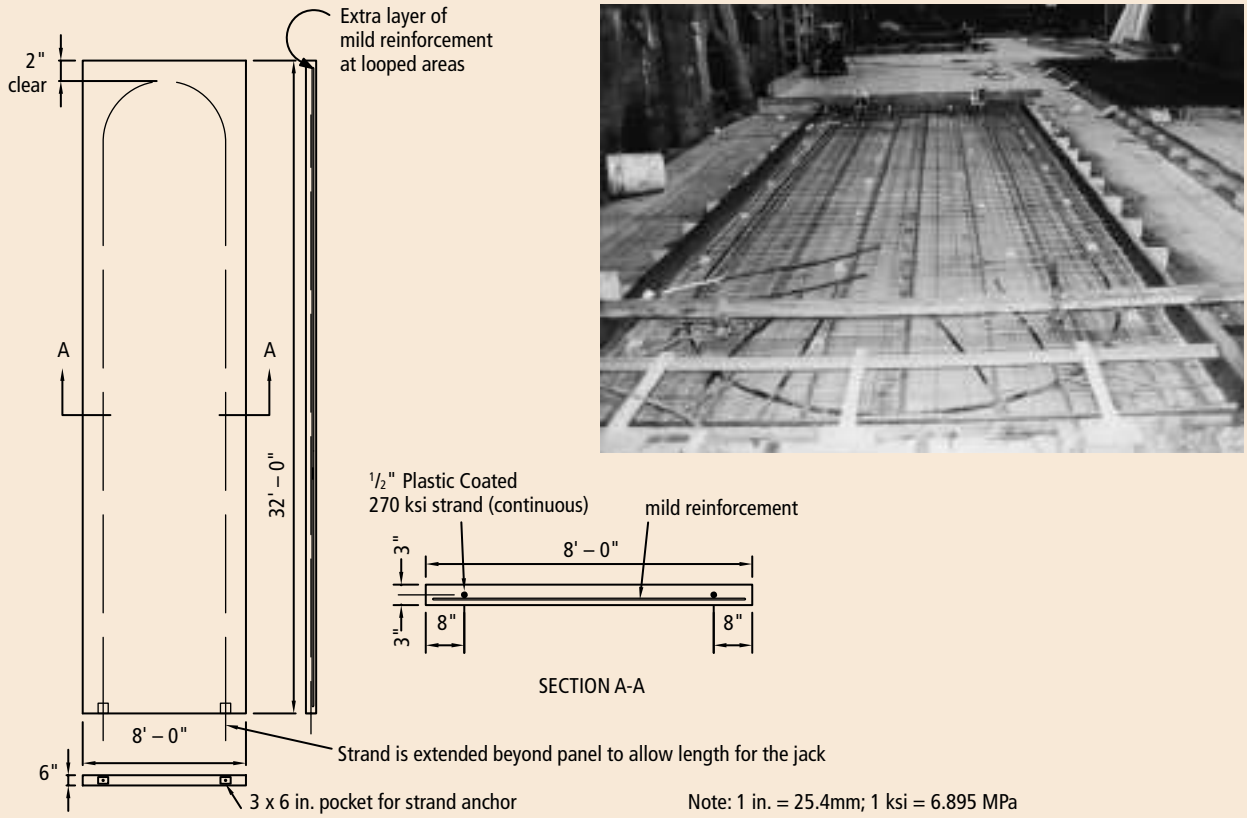

Note: 1 in. = 25.4mm; 1 ksi = 6.895 MPa

inhibitor, such as bituminous paint, zinc rich paint, or epoxy paint to avoid corrosion and possible rust spots.

Many architectural panels that do not lend themselves to being pretensioned because of difficulties with long line casting, such as jacking bulkhead or self-stressing form requirements, can be easily post-tensioned. The process of post-tensioning incorporates the installation of either bonded or unbonded tendons in preformed voids or ducts throughout the length of the member, or through a section of the member. After the concrete has reached a predetermined strength, strands are stressed and anchored against the hardened concrete. The flat panels in Fig. 4.4.1, the largest of which measured 8 x 32 ft (2.4 x 9.8 m), were post-tensioned in the precaster's plant to provide optimum structural integrity for panel lifting, hauling, and erection.

The strand (tendon) most frequently used in architectural precast, post-tensioned concrete is called the monostrand and is composed of a single seven wire prestressing strand. Although monostrands can be fabricated to be grouted, they are usually coated with grease or teflon and encased in a plastic tube. Thus, they are typically used in the unbonded condition.

When panels are post-tensioned, care must be taken to ensure proper transfer of force at the anchorages. Provision for anchor plate and tendon protection against long-term corrosion is essential. The anchorage areas should be sealed immediately after the tendons or strands are post-tensioned. Straight post-tensioning strands or bars can be incorporated into the product, and this would generally require anchorages at both ends of the tendon. One method used to minimize the number of anchorages is illustrated in Fig. 4.4.1. Plastic-coated, unbonded strand with a low coefficient of angular friction (μ=0.03 to 0.05) are looped within the 8 x 32 ft (2.4 x 9.8 m) panels. Anchorages are installed at one panel end only.

A significant design consideration when determining whether or not to employ prestressing is the evaluation of possible future unplanned openings. Cutting of an unbonded tendon will remove the effect of prestressing for that particular tendon. While it is unlikely that unplanned openings will be required, the designer must still be cognizant of this.

4.4.5 Shadow Lines–Reflection Of Reinforcing Steel

Reinforcing steel may show through some finishes as light or dark shadow lines, usually directly over the steel, depending on concrete mixture, vibration of reinforcement, or placing methods.

Steel reflection may be more likely to occur when minimum cover is used over the steel and a rigid steel cage is used. The cage will vibrate as an assembly in phase (resonates) during the intense vibration used to compact the low-slump concrete used in precast concrete units. Welded wire reinforcement or tack welding of steel will stiffen the steel cage and is more likely to produce reflection. Tied steel assemblies do not pose this problem.

If shadowing does occur, sandblasting with the smallest available gun and nozzle and using fine grit can reduce the reinforcement outline to a reasonably uniform tone. However, portions of the surface immediately over the reinforcement may be less dense than areas away from the reinforcement, making it extremely difficult not to over-erode the surface over the reinforcing steel during sandblasting.

Another cause of steel reflection on the surface of a panel is the use of galvanized reinforcement and/or the use of galvanized and non-galvanized reinforcement together in fresh concrete (unless the steel surface of the galvanized reinforcement is passivated).

The reactions of zinc in a concentrated alkaline material (concrete prior to setting has a pH of 12.5 to 13.5) liberate hydrogen gas, forming bubbles of gas at the zinc-coated surface during initial stages of hydration. These bubbles or voids may cause local porosity of the concrete and increase the water absorption of the concrete over the steel, resulting in steel reflection.

When galvanized and non-galvanized reinforcement or steel forms are in contact in fresh concrete, galvanic cell problems may arise during the initial processes of hydration. An electrochemical reaction occurs in which zinc is consumed to form either zincate ion or zinc hydroxide on the anodic galvanized steel, and hydrogen gas may be liberated on the cathodic non-galvanized steel or locally on cathodic areas of the zinc. This reaction tends to be more active where there is a high ratio of black steel surface area relative to galvanized steel surface area. In this case, rows of hydrogen bubbles may form along non-galvanized reinforcement in contact with galvanized reinforcement, or occasionally on smooth black steel form surfaces, resulting in steel reflection.

Although not a steel reflection problem, discoloration or surface distress may occur with some form oils or mold release agents, and concrete may stick in places to the black steel form if galvanized steel is in electrical contact with the form surface.

Research has shown that proper treatment of reinforcement can suppress the liberation of hydrogen on a galvanized steel surface exposed to alkaline cement paste. The following is an excerpt from ASTM A767, *Zinc-Coated (Galvanized) Steel Bars for Concrete Reinforcement*:

> "4.3 Chromating — The galvanized coating shall be chromate treated. This is to preclude a reaction between the bars and the fresh portland cement paste. Proprietary chromating solutions of equivalent strength are permitted in place of the generic chemical treatment specified.
>
> 4.3.1 If the chromate treatment is performed immediately after galvanizing, it may be accomplished by quenching the reinforcement bars in a solution containing at least 0.2 mass (weight) percent of sodium dichromate in water (such as 2 kg/m^3 [3 oz to each 10 gal] of quench water) or by quench chromating in a minimum of 0.2% chromic acid solution. The solution shall be at least 32 °C (90 °F). The galvanized reinforcement bars shall be immersed in the solution for at least 20 seconds.
>
> 4.3.2 If the galvanized reinforcement bars are at ambient temperature, the chromate treatment shall be the same as specified in Section 4.3.1 except that a 0.5 to 1.0% concentration of sulfuric acid shall be added as an activator of the chromate solution. In this case, there is no temperature requirement for the activated chromate solution."

Despite the above precautions, galvanizers are probably not using the required sodium dichromate because the Environmental Protection Agency (EPA) has determined it is a potential carcinogen (cancer causing substance). If the reinforcement was not chromated, another solution would be to add chromium trioxide (CrO_3—chromic acid anhydride) to the concrete (150 parts per million based on weight of mixing water or about 8 oz of a 10% solution per cubic yard of concrete). Alternatively, consider a chromate surface treatment (brushing galvanized steel with $0.3ONK_2Cr_2O_7$

+ 0.4ONHNO$_3$ and then rinsing with water) that suppresses hydrogen liberation. Although these chromate solutions may also be considered carcinogenic.

Portland cements in the United States contain an average of 52 ppm of CrO_3 based on weight of mixing water per cubic yard of concrete with a range of 10 to 156 ppm. Therefore, some cements may have adequate chromium to passivate the surface of the galvanized steel and prevent the problems.

If neither of these approaches is appropriate, it may become necessary to age the shiny zinc film so that a dull, matte, gray or whitish film appears on the surface. This requires exposure of the bright zinc coating to water and sunlight. Weathered or aged galvanized steel is less susceptible to the problems described because when the zinc has a patina the zinc is less active.

4.4.6 Tack Welding

Tack welding, unless done in conformance with AWS D1.4, may produce embrittlement or metallurgical notch of the reinforcing steel in the area of the tack weld. Tack welding seems to be particularly detrimental to ductility (impact resistance) and fatigue resistance. Tack welding affects static yield strength and ultimate strength to a lesser extent. Where a small bar is tack welded to a larger bar, the detrimental "metallurgical notch" effect is exaggerated in the large bar. Fast cooling under cold weather conditions is likely to aggravate these effects.

Welding procedures are critical for reinforcing steel because this steel has a relatively high carbon content. The more carbon the steel contains, the more brittle the material and the higher the susceptibility to embrittlement occurring after a weld begins to cool. For example, if a welded assembly that had not been welded using proper procedures is raised to shoulder height and dropped to the floor, it is quite possible the bars would break off at the weld point like a shattered piece of crystal. This is due to the brittle formation of martensite.

AWS D1.4 prohibits the use of tack welds that do not become part of the permanent welds of reinforcing steel, unless approved by the precast concrete design engineer. However, tack welding of reinforcement at locations where neither bar has a structural function should be allowed. For example, welding the ends of the outside bars (within 10 bar diameters from the free end of the bar) may be an aid in fabrication of reinforcing cages.

When bars are bent cold without the addition of heat, they become sensitive to heat. Subsequently, the application of too much heat will cause mechanical property changes in the cold-worked area of the bar and result in unpredictable behavior of the reinforcing bar at the bend. Therefore as a precaution, it is necessary to keep welds away from cold bends. While AWS D1.4 suggests allowing a cold bend at two bar diameters from a weld, experience shows that a minimum distance of 2 in. (50 mm) with 3 in. (75 mm) preferred is better with the small bars commonly used in precasting.

Tack welding must be carried out without significantly diminishing the effective steel area or the bar area should be one-third larger than required. A low heat setting should be used to reduce the undercutting to $^1/_{16}$ in. (1.6 mm) of the effective steel area of the reinforcing bar.

The welding of crossing bars to assemble reinforcement may be done by fusion welding. A large number of tensile and bend tests by independent labs have confirmed that controlled welding does not adversely affect the mechanical properties of the bars. As a result of these findings, PCI endorses the use of fusion welding in the fabrication shop, but still recommends that field tack welding should not be permitted unless authorized by the design team.

4.4.7 Corrosion Resistance of Reinforcement

A key concern for owners and designers when planning a construction project comes from the possibility of corrosion of reinforcement. Corroding reinforcements can cause significant, long-term deterioration that may go unnoticed until excessive damage has occurred. However, techniques used to design and install reinforcement in all precast concrete applications inherently prevents this from happening. Reinforcement surrounded by concrete is protected from corrosion by the alkaline nature of the concrete. This is particularly important in architectural precast concrete because buildings with such members need to retain their attractive appearance and durability over a long period of time.

In an alkaline environment, a very thin protective layer of iron oxide (called the passivating layer) forms on the steel surface-to-concrete interface, which stops corro-

sion from starting. Passivity may be destroyed either by carbonation of the concrete, which reduces its alkalinity, or by the ingress of chlorides, which can cause localized disruption of the passive layer.

Depassivation, either locally or generally, is necessary but not sufficient cause for active corrosion-induced damaged to occur. The presence of moisture and oxygen are essential for corrosion to proceed at any significant rate. Because architectural precast concrete members are vertical or inclined, the possibility of moisture retention or ponding on these elements is remote. Therefore, such members are not as susceptible to moisture penetration.

4.4.7.1 Chlorides

Chloride ions are most common cause of corrosion of reinforcing steel in concrete. In general, precast concrete does not have a quantity of chloride ions that will cause corrosion. This is the case even in marine environments with salt spray, fog, or mist. The principal potential source of chloride in architectural precast concrete is that introduced into the concrete, intentionally or otherwise. The use of chloride-containing materials in concrete is strongly discouraged.

Architectural precast concrete is generally not exposed to deicing salts. According to Table 4.4.1 of ACI 318, the total mixture water-soluble chloride ion content contributed from the water, aggregates, cementitious materials and admixtures should not exceed 0.06% chloride ions by weight of cement for prestressed concrete. The corresponding figure for reinforced concrete is 0.15%. Additionally, each admixture should not contribute more than 5 parts per million by weight of chloride ions to the total concrete ingredients.

In situations, where chloride ions reach the steel, some of them find naturally occurring imperfections in the passivating layer causing the steel to initiate corrosion.

The threshold value of chloride concentration from externally applied sources, below which corrosion does not occur, is about 0.20% acid-soluble chloride ion content by weight of cement. This is equivalent to about 0.025 to 0.040% by weight of concrete or 1.0 to 1.5 lb/yd^3 (0.593 to 0.890 kg/m^3) of concrete. It can take years or decades for this threshold amount of chloride to collect at the steel in uncracked concrete from externally applied salts. The time to corrosion depends on the concrete cover and the concrete permeability to chloride ions. Permeability is mainly affected by the water-cement ratio (W/C) and concrete additives.

While chlorides are directly responsible for the initiation of corrosion, they play only an indirect role in determining the rate of corrosion after initiation. The primary rate controlling factors are the access of oxygen, the electrical conductivity, and the relative humidity — all of which are interrelated — and temperature. Similarly, carbonation destroys the passive film but does not play a role in determining the rate of corrosion.

4.4.7.2 Concrete Cover

Two key factors that influence the likelihood of reinforcement corrosion initiation in precast and prestressed concrete members are the amount of cover for the reinforcement and the properties of the concrete, particularly the concrete's permeability, immediately surrounding the reinforcement and whether it is cracked. Ensuring proper cover can be an overlooked item in a durability protection program. Economical corrosion-resistant design depends on understanding how these two factors influence corrosion.

Concrete cover refers to the minimum clear distance from the reinforcement to the surface of the concrete. For exposed aggregate surfaces, the concrete cover to the steel's surface should not be measured from the original surface. Instead, the depth of mortar removed from between the pieces of coarse aggregate (depth of reveal) should be subtracted to give a realistic measurement. Attention also must be given to scoring, false joints or rustications, and drips, as these reduce the effective cover. The reduction in these areas should not exceed one-third of the specified cover. The required minimum cover should be measured from the thinnest location to the reinforcement. In order to provide corrosion protection to reinforcement, concrete cover should conform to ACI 318, Section 7.7, as listed in Table 4.4.2.

Cover requirements over reinforcement should be increased to $1^1/_2$ in. (38 mm) for non-galvanized reinforcement or be $^3/_4$ in. (19 mm) with galvanized or epoxy-coated reinforcement when the precast concrete members are acid-treated, exposed to a corrosive environment, or subjected to other severe exposure conditions. For all exposure conditions, the cover should be greater than one-and-a-half times the nominal maximum aggregate size or equal to the specified concrete cover, whichever is larger. This minimum cover also al-

Table 4.4.2. Minimum Cover Requirements for Architectural Precast and Prestressed Concrete.[1, 2]

Condition	Minimum Cover[3]
Exposed to earth or weather	#11 bar and smaller and prestressing tendons $1^1/_2$ in. and smaller – $^3/_4$ in.
Not exposed to earth or weather	#11 bar and smaller – $^5/_8$ in.; prestressing tendons $1^1/_2$ in. and smaller – $^3/_4$ in.

Note: 1 in. = 25.4 mm

[1]Manufactured under plant-controlled conditions.

[2]Increase cover by 50% if tensile stress of prestressed members exceeds $6\sqrt{f'_c}$.

[3]Realistic only if maximum aggregate size < $^1/_2$ in. (13mm) and reinforcing cage is not complex.

lows for proper flow and consolidation of the concrete under the reinforcement as the concrete is placed.

Reinforcement should be placed within the allowable tolerances, but the concrete cover should be set so that the resulting concrete cover is never less than that specified after consideration of maximum reinforcement placement tolerances. Where possible, excess cover of $^3/_8$ in. (10 mm) should be specified depending on the degree of complexity of the cage because of the tolerance of locating reinforcing steel using standard fabrication accessories and placing procedures.

In determining cover, consideration should be given to the following:

1. Maximum aggregate size, as cover should always be greater than the nominal maximum aggregate size, particularly if a face mixture is used.
2. Means used to secure the reinforcement in a controlled position and maintaining this control during placement of concrete.
3. Accessibility for placement of concrete, and the proportioning of the concrete mixture relative to the environment.
4. Type of finish treatment of the concrete surface.
5. Service environment at the concrete surface: interior or exposed to weather, ocean atmosphere, or corrosive industrial fumes.
6. Fire code requirements.

Increased concrete cover improves the protection provided to the reinforcement, in part, because it acts as a diffusion barrier to the passage of water vapor and liquid. Providing more cover than necessary is not beneficial, although ACI 318 Section 7.7 does not specifically say so, and $2^1/_2$ to 3 in. (63 to 75 mm) should be regarded as a maximum. Concrete cover thickness outside this limit lacks the restraint of the steel and is consequently more likely to have wide cracks. In no case should the reinforcement be allowed to be beyond mid-depth of the precast concrete element from the exposed surface.

4.4.7.3 Permeability

The ability of high-quality architectural precast concrete to resist the ingress of water, carbon dioxide, chloride, oxygen, or other deleterious substances depends mostly on the permeability of the cement paste. Because the aggregate particles are surrounded by the hardened cement paste and most sound aggregates have low porosity, the permeability of concrete is principally a function of the permeability of the cement paste component of the concrete.

The water permeability of hardened cement paste is primarily a function of the original w/c and the length of the curing period (extent of hydration). Low permeability is obtained in a well-consolidated concrete with a low w/c , a characteristic of architectural precast concrete. A maximum w/c of 0.40 is recommended for corrosion protection of concrete exposed to deicing salts, brackish water, seawater, or spray from these sources. Figure 4.4.2 shows how w/c affects the penetration of chlorides in uncracked concrete. If the minimum concrete cover required by ACI 318, Section 7.7 is increased by $^1/_2$ in. (13 mm), the w/c may be increased to 0.45 for normalweight concrete. Prior to specifying water-cement ratios less than 0.40, the design team should contact local precast concrete suppliers to determine their capabilities with the desired special-facing aggregates.

Permeability can also be reduced by the use of clear penetrating concrete surface sealers, such as silane or siloxane. These are chemical products that partially penetrate the concrete and prevent moisture or soluble chemicals from penetrating to the reinforcement. However, prior to specifying sealers, designers should contact local precasters to determine the probable effect of specific sealers on surface appearance and project cost.

4.4.7.4 Carbonation

The reaction of carbon dioxide (CO_2) and sulphur dioxide with hydrated portland cement is called carbonation, which neutralizes the passivating oxide film

Fig. 4.4.2 Measured chloride profiles in moist-curved concrete from two FHWA investigations.

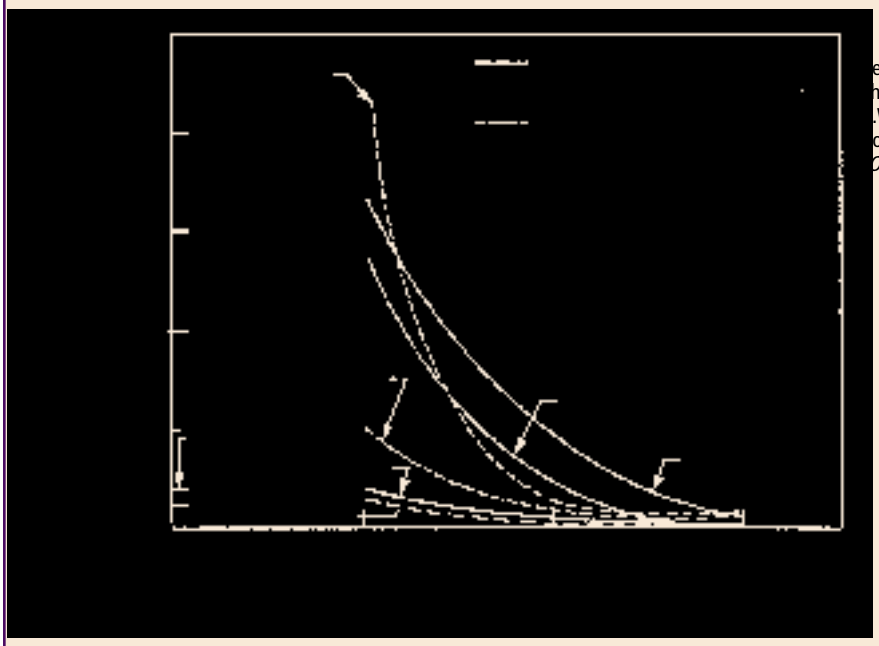

eference:
herman, M.R., McDondald, D.B., and Pfeifer, .W., "Durability Aspects of Precast Prestressed oncrete — Part 1: Historical Review," *PCI OURNAL*, V. 41, No. 4, July-August 1996, pp. 62-74

on the steel developed by the alkaline conditions of hydrated cement paste. Normally, with high-quality concrete, the effect of carbonation does not penetrate more than about $^1/_8$ to $^1/_4$ in. (3 to 6 mm), even when exposed to the weather for 30 years. The effects of carbonation can cause the pH of the concrete's pore water to drop from between 12.6 and 13.5 to about 8 to 9, at which level the passive film on steel is unstable. Thus, if the entire concrete cover layer were carbonated, corrosion of steel would occur, provided oxygen and moisture necessary for the reactions of corrosion are present.

As a result, it is important to know the depth of carbonation and, specifically, whether the carbonation "front" has reached the surface of the embedded steel. Because of the presence of coarse aggregate, the front does not advance as a perfectly straight line. It might also be noted that, if cracks are present, CO_2 can enter through them so that the front advances locally from the penetrated cracks. Galvanized steel remains passivated to much lower levels of pH than does black steel.

Carbonation rates are generally low in typical precast concrete with w/c less than 0.40, but are on the rise because of the increased concentration of gases in industrial environments. Under natural conditions, the atmospheric concentration of CO_2 in air is about 0.03%; in U.S. cities this is increased to 10 times that value and, at industrial sites, can rise as high as 100 times normal levels.

Carbonation occurs progressively from the outside of concrete exposed to CO_2, but does so at a decreasing rate because CO_2 has to diffuse through the pore system, including the already carbonated surface zone of concrete. Carbonation does not occur in very dry concrete or concrete at 100% RH. Apparently, at 100% RH, the moisture blocks CO_2 from passing through the pores. The most aggressive environment for concrete carbonation is that of alternate dry and wet cycles (and, of course, high temperatures). Under constant conditions, the optimum environment for carbonation occurs at a RH of between 50 and 70%.

The considerable influence of concrete's moisture content on carbonation means that even in a single building made of the same mixture design, there may be considerable variation in the depth of carbonation at a given age. Walls that are more exposed to rain will have a lower depth of carbonation, as will sloping surfaces that can be washed down by rain. This also applies to walls that can be dried thoroughly by the sun's rays.

The chloride content at the carbonation front reaches much higher levels than in uncarbonated concrete as any

chloride bound in the cement paste is released and is also much higher than the levels measured just below the concrete surface. Added to this factor is the effect of the decrease in pH of the carbonated concrete. Note that the concentration of chlorides necessary to initiate corrosion (the threshold value) decreases with pH.

4.4.7.5 Crack Widths

Cast-in-place concrete structures are inherently prone to restrained volume change–induced cracking. This cracking results from the normal restraint of movement that occurs when complex shapes and structural elements attempt to contract during early-age, concrete volume changes. These changes are caused by concrete temperature changes and drying shrinkage and are normal for cast-in-place concrete. Such natural restraint is difficult to eliminate. Therefore, cast-in-place concrete is designed with the assumption of a cracked section.

Precast concrete has less natural restraint problems, because the individual members are not initially integral with the structure. This is particularly true during the early-age time period when large concrete-related thermal and drying shrinkage effects occur. Sufficient reinforcement must be used in each unit to control the distribution of any shrinkage cracking which may occur.

The potential exposure of the reinforcement to oxygen and moisture as a result of cracking (both necessary for corrosion) is lessened in precast concrete. In addition, the denseness and impermeability of the precast concrete due to low water-cement ratios of plant-cast concrete should be considered when evaluating the corrosion potential.

A certain amount of cracking may occur without having any detrimental effect on the structural capacity of the member; it is impractical to impose specifications that prohibit cracking. However, in addition to being unsightly, cracks are potential locations of concrete deterioration and should be avoided if possible. The key point is cracks do not always result in corrosion of reinforcement. This depends not only on the width of the crack and whether it reaches the reinforcing steel, but also on the presence of chlorides or low pH in combination with oxygen and moisture.

When corrosion starts at a crack, the depassivated areas near the crack become the anode of a corrosion cell, while portions of the bar that are still protected by sound, alkaline concrete become the cathode. At the anode, metal ions are released. At the cathode, oxygen combines with water to form hydroxyl ions, which flow through the electrolyte to the anode where they combine with the metal ions to produce iron hydroxide. As a secondary reaction, this hydroxide combines with additional oxygen to form rust. The problem is rust occupies more volume than steel, causing more cracking.

The rate at which corrosion will occur depends on the resistance of the path through the concrete between the anode and the cathode and the availability of oxygen at the cathode, which is situated on the reinforcing bar surrounded by sound concrete, not at the crack. The rate of corrosion is thus dependent on the properties of the sound concrete. Cracks with widths below a certain limiting magnitude play no role in the reinforcement corrosion process.

The amount and location of reinforcing steel has a negligible effect on structural performance of a concrete element until a crack develops. As tension stresses increase above the concretes' modulus of rupture, hairline cracks will develop and extend a distance into the member. A sufficient amount of closely spaced reinforcement limits crack widths and the intrusion of corrosion initiators. Prestressing also may be used to limit or eliminate crack width. If the crack width is narrow, not over 0.012 in. (0.30 mm), the structural adequacy of the casting will remain unimpaired and the crack will have little influence on the potential for corrosion of the reinforcement. If crack repair is required for the restoration of structural integrity, cracks may be filled or pressure-injected with a low-viscosity epoxy.

Cracks transverse to the reinforcing steel usually do not cause continuing corrosion of the reinforcement if the concrete has low permeability. The potential corroded length of intercepted bars is likely to be no more than three bar diameters, because the exposed portion of a bar at a crack acts as an anode. Cracks that follow the line of a reinforcing bar are much more damaging because the potential corroded length of the bar is much greater and the resistance of the concrete to spalling is reduced. For surfaces exposed to the weather, cracks up to 0.005 in. (0.13 mm) wide have no influence on the corrosion of reinforcement and should be acceptable from an aesthetic viewpoint (Fig. 4.4.3).

Fig. 4.4.3 Viewer reaction to cracks of different widths.

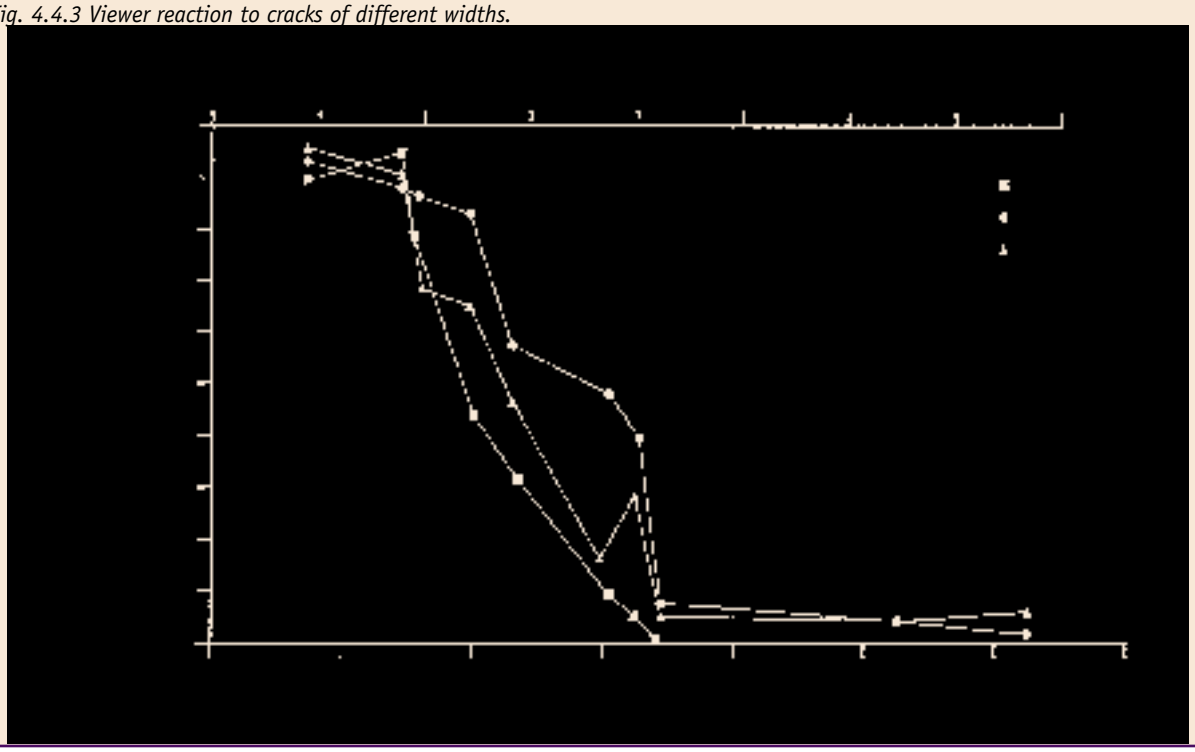

Figure 4.4.4 shows variations in crack width between the concrete surface and the bar surface obtained by injecting resin into cracks in a beam while under load and then sawing up the beam after the resin has set. For a given steel stress, the crack width at the bar surface remains constant while the width at the surface varies more or less linearly with the increase in cover. There is not a constant relationship between surface width and width near the bar. A direct relationship between surface crack width and corrosion should not be expected to exist.

Crack width appears to have a significant effect on the amount of corrosion at a relatively early age, because the time to depassivation is dependent on the width of the crack. However, once corrosion has started, the rate of corrosion is independent of crack width. If the combination of concrete density and cover thickness is adequate to restrict the flow of oxygen and moisture, then the corrosion process is self-sealing. Crack widths still should be controlled for appearance and watertightness.

4.4.7.6 Corrosion Protection

Corrosion of reinforcement is usually not a problem in architectural precast concrete. It should be recognized that galvanized or epoxy-coated reinforcement cannot take the place of quality control in mixture proportioning and steel placement. Sound concrete having strengths of 5000 to 6000 psi (34.5 to 41.4 MPa) in 28 days with a w/c of 0.40 or less and proper cover (greater than $^3/_4$ in. [19 mm]) typically will provide all of

Fig. 4.4.4 Internal crack widths

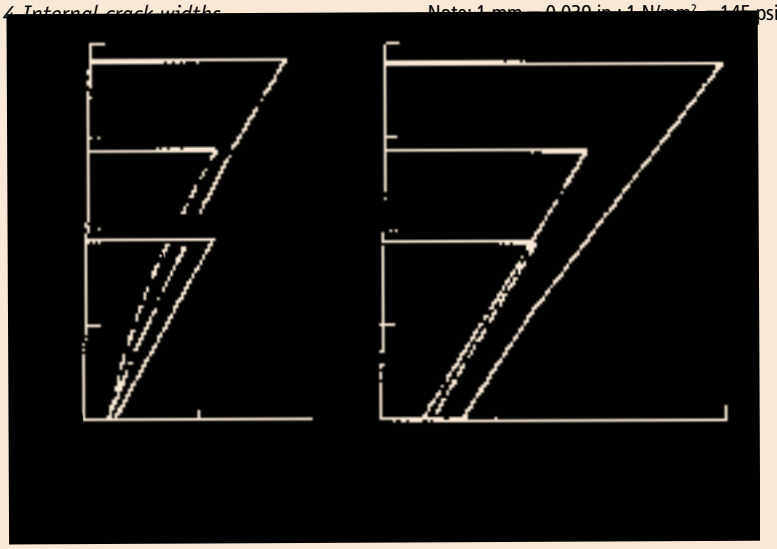

the corrosion protection necessary for the reinforcing steel in architectural precast concrete.

GALVANIZED REINFORCEMENT. The term galvanized steel refers to the electrolytic method that bonds zinc to the steel surface. Zinc is a reactive metal that readily oxidizes in air to form a corrosion-resistant film of zinc oxide. The zinc oxide layer is very thin, hard, and tenacious and is the first step in the development of the protective corrosion product-layer normally associated with galvanized coating. When this surface has access to freely moving air in normal atmospheric exposure, the surface reacts with rainfall or dew to form zinc hydroxide.

During drying, the zinc hydroxide reacts with carbon dioxide in the atmosphere and is converted into a thin, compact, and tightly adherent layer of basic zinc carbonate. This layer provides the barrier protection afforded by the galvanized coating. Because it is relatively insoluble, the basic zinc carbonate layer is weather resistant and, once formed, minimizes further corrosion.

Galvanized WWR generally is manufactured from galvanized wire and is a stock item in some sizes. There is no specific ASTM specification for galvanized WWR, but ASTM A641/A641M serves as a reference. The amount of zinc coating on WWR is rarely specified for galvanized WWR. Galvanized wire can be produced with thicknesses of zinc coating ranging from 0.30 to 2.0 oz/ft^2 (107 and 610 g/m^2) for different grades and wire sizes. The galvanizing premium is usually 35 to 40% over non-galvanized wire. Deformed wires are seldom galvanized.

Where galvanizing of reinforcing bars is desired, galvanizing in accordance with ASTM A767/A767M is usually performed after fabrication but may be done before fabrication. The ASTM specification has two classes of zinc coating weights. Class II (2.0 oz/ft^2 [610 g/m^2]) normally is specified for precast concrete units. ASTM A767/A767M requires that all damaged coating be repaired with a zinc-rich formulation (92 to 95% metallic zinc in the dry film) in accordance with ASTM A780/A780M, and sheared ends coated with a zinc-rich formulation.

Some precasters prefer galvanized reinforcement because it minimizes the potential for staining caused by red rusting during the prolonged storage of reinforcing steel, which often is required by the economics of bulk purchasing.

A galvanized coating is anodic to the base steel and provides cathodic protection to exposed steel, such as cut edges or holes in the galvanized coating due to abrasion or impact. Galvanizing is "sacrificial" protection; therefore, in a corrosive environment, it also corrodes. The zinc oxide does not crack the concrete as quickly as iron oxidation products because it occupies about one-third less volume for a given weight and is loose and powdery.

The rate of pressure buildup from corrosion products is reduced by using a zinc sacrificial barrier, increasing the time before corrosion-related cracking occurs. Whether cracking of the concrete occurs subsequently or not depends on many factors such as the strength of concrete, amount of concrete cover, size of galvanized member, exposure conditions, and chemical composition of concrete. To what extent the base steel will be corroded is uncertain because galvanizing does furnish sacrificial protection to the steel.

Galvanized reinforcement is recommended when minimum cover requirements cannot be achieved, or when the concrete is exposed to a particularly severe environment. However, a detrimental chemical reaction can take place when the concrete is damp and chloride is present. Therefore, the benefit obtained by galvanizing is questionable for members subjected to a marine atmosphere.

EPOXY-COATED REINFORCEMENT. Epoxy-coated reinforcement has been widely used in aggressive environments since the early 1970s. Epoxy-coated reinforcing bars should conform to ASTM A775 and epoxy-coated WWR should conform to ASTM A884. ASTM A934 covers epoxy coating of fabricated bars. The effectiveness of epoxy coatings for protecting steel from corrosion has been well documented. However, this can only be achieved if the coating has minimal pinholes (holidays) and is not significantly damaged. The corrosion resistance is related to holiday count (that is, any hole or defect in the coating that permits corrosion current to pass between the bare steel and liquids) and extent of damage.

In practice, there will be some pinholes in the coating when the epoxy-coated reinforcement leaves the factory (ASTM requires not more than an average of one holiday per foot). Additional damage may occur during transport to the precast concrete plant, placement of the reinforcement, and placement and vibration of the concrete. Such damage should be repaired but locat-

ing all the holidays is difficult and very time consuming. The after-fabrication cut ends and damaged areas should be patched using the manufacturer's approved patch compound.

In addition, bent bars, although visually undamaged might have lower corrosion resistance than straight bars. The long-term durability of structures employing epoxy-coated reinforcement will depend on the progress of corrosion where defects occur in the coating material. If defects are limited and corrosion does not spread beneath the coating, long-term performance should be possible. If high-quality practices cannot be used, the use of epoxy reinforcement should be limited.

Epoxy-coated reinforcement does not control cracks as well as uncoated reinforcement. Cracks in concrete members reinforced with epoxy-coated reinforcement, if they occur, will tend to be larger than cracks of similar concrete members reinforced with mild reinforcing steel. If crack-free design is used, then there is no reason for epoxy coating. Thus, epoxy-coated reinforcement should not be specified for architectural precast concrete that is expected to be nearly crack free.

Epoxy-coated reinforcement may add significantly to the cost of the precast concrete products. This results from epoxy-coated WWR costing two to two-and-a-half times that of plain WWR, and depends on the size of the wires. The premium cost of epoxy-coated reinforcing bars ranges from 15 to 30% more per pound than plain bars.

The use of epoxy-coated reinforcement in architectural precast concrete panels has not been observed to produce a significantly better performance. This could be due to the difficulties in achieving the ideal epoxy coating. The reduction of performance, when exposed to heat or fire, is also a concern. Epoxy coatings usually are used where the projected loss of bond under high heat is not significant. Epoxy-coated reinforcement is not necessary with the environmental conditions typically experienced by architectural precast concrete as long as adequate cover and a low w/c concrete are used.

4.5 CONNECTIONS

4.5.1 General

Connections are a significant design consideration that influence the safety, performance, and economy of the precast concrete system. Many different connection details are often required to accommodate the multitude of sizes and shapes of precast concrete units and varying support conditions.

Regardless of whether an architectural precast concrete element is used in a loadbearing or a non-loadbearing application, various forces must be considered in connection design. In non-loadbearing applications, a cladding panel must resist its self weight and all other appropriate forces, such as earthquake, wind, snow, restraint of volume changes and effects of support system movement, construction loads, loads from adjacent materials, and any other specified loads. These forces are transferred by the architectural precast concrete element through connections to the supporting structure. If the panel is loadbearing, then in addition to the above, each connection must also resist and transfer dead and live loads imposed on it by floor and roof elements.

A major advantage of precast concrete construction is rapid erection. To fully realize this benefit and to maximize economy, field connections should be simple, repetitious, and easy to install. Precasters and erectors have developed individual, specific connections over the years that they favor because they suit their particular production and/or erection techniques.

Connections should comply with local building codes and also satisfy the functional and aesthetic requirements of the project, such as recessing for flush floors and/or exposed ceilings. Connections are designed for each project. Nevertheless, general concepts governing the design, performance, and material requirements of connections can be formulated for each project. For the most effective design, along with efficient connections details, it is recommended that the designer coordinate the connection concepts with a precast concrete manufacturer prior to finalizing the plans.

Terminology: Terms used in this section may be unfamiliar to some. A precast concrete **unit** (aka **panel** or **element**) is attached to the main building **structure** (or **frame**) with a **connector** or **connection** that consists of several parts. The **body** is the main part of the connector and may also include fasteners between its components (for example, the angle in Fig. 4.5.24 (page 335) and Fig. 4.5.25 (page 335), the tube and plate assembly, with the weld being a fastener). **Fasteners** are items such as bolts, welds, weld plates, or even grout or epoxy resin. Fasteners may be used to attach the body to other portions of the connec-

tion. The body, if more than very simple, is sometimes called a **bracket** or **outrigger** and according to what it projects from, a panel bracket or a seat bracket. The **seat** (or **bearing** surface) is that portion of the structure upon which the precast concrete unit's weight is supported, and could be a floor or roof slab edge, a beam, or a seat bracket projecting from a column or beam. **Shear** (or **weld**) **plates** are welded between parts of a connection, such as a panel bracket and seat, primarily to transmit horizontal loads from one to the other. **Tiebacks** (**push-pull, lateral**, **stay**) are the connectors that resist forces, primarily perpendicular to a wall panel, due to wind or out-of-plane seismic and the couple created by eccentric **bearing** (or **support**) connectors. Tiebacks connect at the structure side to tieback **receiver** brackets (or **kicker**) (for example, the four angle assembly in Fig. 4.5.33 (page 336). **Anchors** or **anchorages** are that part of the connection that are embedded in the concrete, either in the precast concrete unit (panel anchors) or the main structure (structure anchors), and typically are headed studs, bolts, threaded **inserts** (**coil** or **national coarse**), deformed bars, or structural shapes. **Expansion** or **chemical anchors** are also used at times. **Embedments** are items, usually steel fabrications (with anchors), cast into concrete. **Adjustable inserts** are (usually proprietary) assemblies that have internal adjustability.

4.5.1.1 Design Responsibilities

A successful project requires close cooperation and coordination between all participants. With the current complexity of construction, it is essential to have design input by the precaster at an early stage. The precaster will be able to supply suggestions and designs that ensure that maximum design efficiency is achieved at the lowest erected cost.

The precaster will usually develop the precast concrete connection details and be responsible for those details and their performance. Practices regarding the assignment and acceptance of responsibility in design and construction vary. It is imperative that the responsibilities of various parties be clearly and firmly established in the contract documents (see Section 4.1 for further discussion).

The building frame must be designed with adequate bracing and be stiff enough to support the precast concrete panels without unanticipated distortion, recognizing that panel loads are usually concentrated at discrete points, which may require localized strengthening and/or stiffening of structural members. The contract documents should clearly show acceptable locations for bearing connections and structural loading requirements. When the panel support system requires projecting brackets, kickers, hardware, and bracing integral to the panel-support frame, they should be designed by the EOR with input from a precaster.

4.5.2 Design Considerations

The primary purpose of a connection is to transfer loads between the panel and the supporting structure. In doing so, connections must satisfy design criteria including:

1. **Strength.** A connection must have the strength to safely transfer the forces to which it will be subjected during its lifetime. In addition to gravity loads (such as panel self weight), the forces to be considered may include:
   a. Wind, seismic forces, and blast forces.
   b. Forces from restraint of material volume change.
   c. Forces induced by restrained differential movements between the panel and the supporting structure.
   d. Forces required for stability and equilibrium.
   e. Loads from adjacent materials, such as windows, louvers, signs, and other panels.
2. **Ductility.** This is the connection's ability to accommodate deformations without failure. Ductility is generally achieved by designing connections so that steel components yield prior to failure of the concrete.
3. **Volume change accommodation.** Restraint of creep, shrinkage, or temperature strains can induce large stresses into precast concrete members and their supports and thus, must be considered in connection design. It is usually far better for the connection to allow some movement to take place, thus minimizing such stresses. The proper accommodation of thermal movements in the wall is a major design consideration. In non-loadbearing units, such movements should be allowed to take place in individual units with no (or a minimal) effect on adjacent units. Movements caused by long-term concrete shrinkage (after a reasonable curing time) and creep are normally insignificant in cladding units, but these movements for loadbear-

ing panels should be considered in the structural design. The *PCI Design Handbook* supplies procedures for estimating such movements.

4. **Durability.** When exposed to weather or used in a corrosive atmosphere, connections should be adequately protected with concrete, paint, galvanizing, or other coatings. Stainless steel is rarely used for connection hardware because of cost. All exposed connections should be periodically inspected and maintained.
5. **Fire resistance.** Connections should be protected as required.
6. **Constructability and economy.** The following items related to constructability and economy should be considered when designing connections:
   a. Use standard connection types.
   b. Use standard hardware items and as few different sizes as possible.
   c. Avoid reinforcement and hardware congestion.
   d. Avoid penetration of forms.
   e. Consider clearances and tolerances.
   f. Use industry production and erection tolerances.
   g. Plan panel connection operations to use a hoist or crane for the shortest possible time.
   h. Provide for appropriate field adjustment.
   i. Provide accessibility to complete the connection from the same floor level.
   j. Ensure connections are concealed within space provided by interior finishes.
   k. Minimize length and size of field welds.

Fig. 4.5.1 Forces on a panel subjected to wind suction or seismic and eccentric loading.

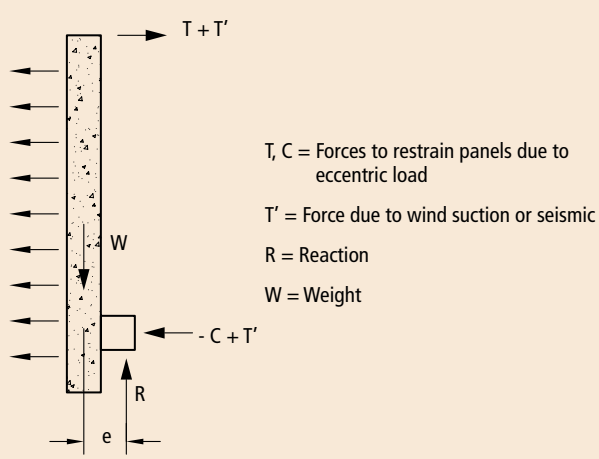

7. **Wind considerations.** Building codes delineate methods by which design wind pressures should be determined for any structure. However, these loads may not be adequate for localized portions of a tall structure that may be subject to gusting or funnel effects produced by adjacent structures. In these cases, a wind tunnel test is normally used to assess wind loads. The lateral deflection of thin panels subjected to wind should be determined, particularly if they are attached to, or include, windows. Wind suction must be considered in design with the magnitude dependent on the panel shape or building configuration. Although the design of the panel itself will generally not be critical for wind loading, the design of the connections may be. This is particularly true for tension connections that resist eccentric gravity loads (Fig. 4.5.1).
8. **Seismic considerations.** Seismic motions occur in both directions on all three axes (although the vertical seismic forces generally do not control) and the resultant forces may be very large. These forces are usually reduced by designing structural systems with sufficient ductility to absorb the seismic energy and dissipate the forces. Seismic effects can result in substantial story drifts, which are horizontal movements of one floor with respect to those above and below.

   Once the cladding panelization is determined, the general seismic design approach for architectural cladding is to determine how the panel will behave in response to drift and then to configure the connections to accommodate that behavior. Joint locations and widths are important aesthetic concerns and should be considered in the design process.

   For design convenience, all gravity and seismic forces are assumed to originate at the unit's center of gravity. Horizontal forces and movements are considered one direction at a time; left, right, in, out, and algebraically added to gravity loads. The story drift is generally accounted for with connections that flex or slide. For example, a tieback connection is designed to deform under lateral forces, so it should not transmit racking forces from the support frame to the panel. All connections need to be ductile and designed and anchored in such a manner as to preclude sudden failure.
9. **Blast resistance.** Blast resistance may be specified for buildings judged to be a potential target for

attack. Blast loading is characterized by very high forces acting over very short periods of time—typically measured in milliseconds. Ductile materials and detailing and redundant systems should be used to prevent the units from becoming a "fall hazard." This subject is treated more fully in Section 5.6 of this manual.

4.5.2.1 Panel Configuration

Panel size and the number and spacing of the connection locations all influence connection design. In general, the minimum number of connections and the largest size of panel, subject to limits in shipping and erection, are the most economical.

The location of joints between precast concrete panels is an important part of the evaluation of economical connections. Figure 4.5.2 shows a few of the many possible panel configurations for a window wall. In addition to aesthetics, defining the panel configuration requires recognition of the joint size and movement with story drift due to wind or earthquake loads. When possible, it is advantageous to locate panel joints at gridlines or column lines.

Typical panel connections generally consist of two bearing connections and four lateral (or tieback) connections. Bearing connections and tieback connections are sometimes combined. The weight of a panel should be supported on not more than two points and at one level. If supported by more than two points or at more than one floor, the deflections of supporting frame members may cause the weight distribution to be different than calculated and could compromise performance.

Figure 4.5.3 illustrates schematically some common connection locations for different panel types. Figure 4.5.3(a) represents a typical (floor-to-floor) wall unit. Figures 4.5.3(b) and (c) show possible connection locations for a narrow unit, such as a column cover, and (d) shows a wide unit, such as a spandrel, with optional, intermediate tieback connections to minimize flexural stresses and deflection in longer panels. Spandrel panels should be supported at floor level and restrained at a column or other vertical member rather than at the underside of the floor member. This prevents potential creep rotation of the edge member from affecting the alignment of the panel. Mid-length tiebacks for spandrels and mid-height connections for taller column covers are sometimes used to stiffen the panel for lateral loads, resulting in thinner, lighter, and more eco-

Fig. 4.5.2 Typical arrangement of precast concrete panels.

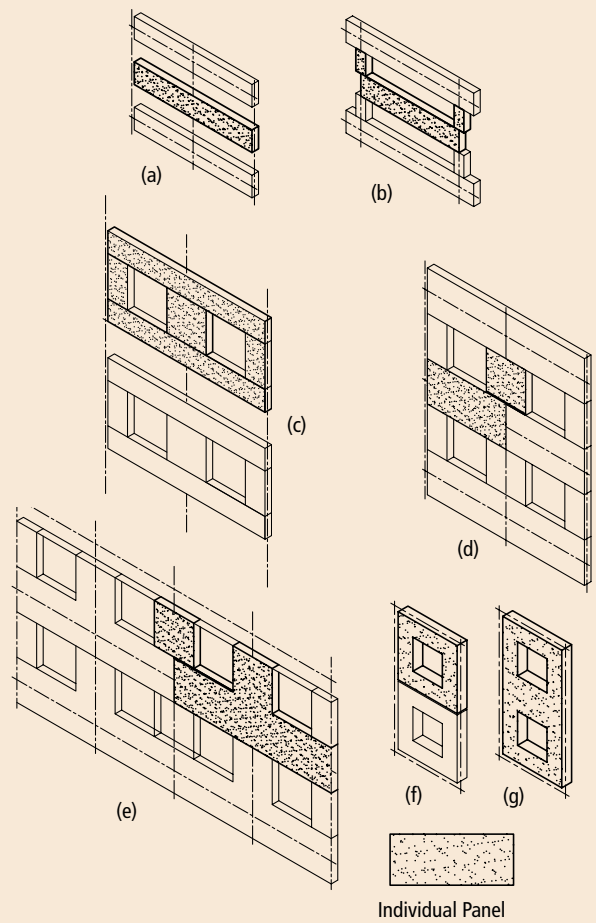

Fig. 4.5.3 Typical cladding panel connector locations.

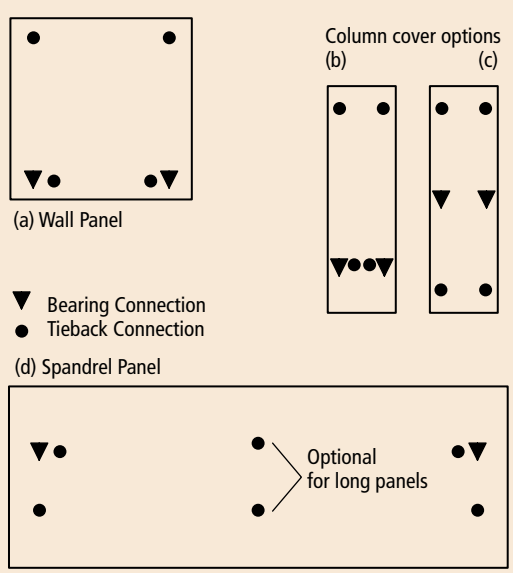

nomical panels. Special consideration should be given to story drifts if connecting units at three levels. In all cases, the basic connection concepts are similar. In high seismic areas, force levels often have led to fixing both bearing connections with no ill effects, in spite of volume change considerations.

Story drift is less of an issue if spandrel panels' load-bearing connections and tieback connections are located on the floor beam (Fig. 4.5.3[d]). In this instance the tiebacks are not affected by story drift because the top and bottom of the floor beam move together.

Connection details and joint sizes between cladding panels should be designed to accommodate any shrinkage, story drift, or other expected movement of the structure, such as sway in tall, slender, steel-frame structures. Story drift must be considered when determining joint locations and sizes, as well as connection locations and types. Connections that permit movement in the plane of the panel for story drift (by flexing of steel or sliding, with slotted or oversized holes, or other methods allowing for equivalent movement and ductility) are desirable.

In loadbearing wall construction, horizontal joints and connections usually occur at, or preferably just above floor levels and at the foundation or transfer beams. Joints may be between floors and walls or wall units only. The principal forces to be transferred are vertical and horizontal loads from panels above and from the diaphragm action of floor slabs. When the panels are "stacked," one panel bearing on another, consideration should be given in the connection design to drift.

4.5.2.2 Panel–connection–structure interaction

The interdependency of panel behavior and the supporting frame must be understood.

The way cladding panels behave in response to displacement of the supporting structure can be categorized as shown in Fig. 4.5.4.

Fig. 4.5.4 Modes of panel response to displacement.

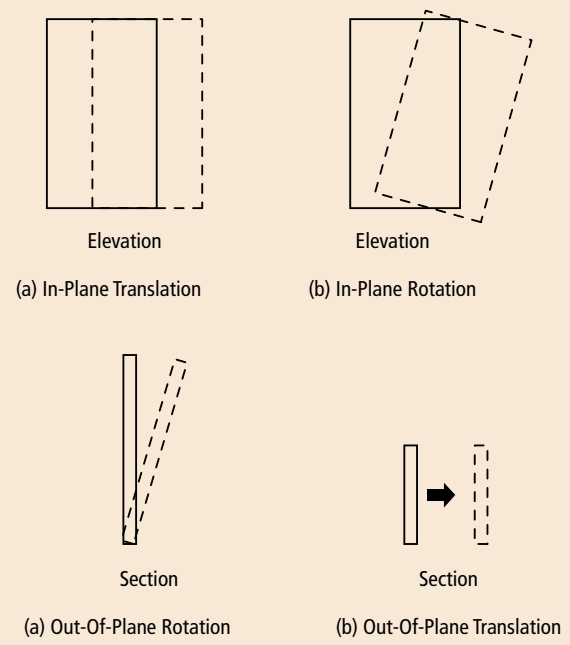

In-Plane Translation occurs when the panel is "Fixed" in-plane to one level. The panel translates laterally with that level, remaining vertical in elevation. Spandrel panels and wall panels are typically designed to behave this way.

In-Plane Rotation, also known as "rocking", occurs when the panel is supported in-plane at two levels of framing. When the structure displaces, the lateral connections drag the panel laterally, causing it to rotate in-plane. This rotation requires bearing connections that allow lift-off. Column covers are sometimes designed this way.

Out-of-Plane Rotation is the tilting of a panel perpendicular to its face. This motion is common whenever a panel is connected to the structure at different levels of framing. The push-pull connections that support the panel for wind and seismic forces will also cause the panel to tilt out-of-plane during story drift. Bearing connections should be designed to accommodate out-of-plane rotation when panels behave in this fashion.

Fig. 4.5.5 Corner joint made wider to avoid collision.

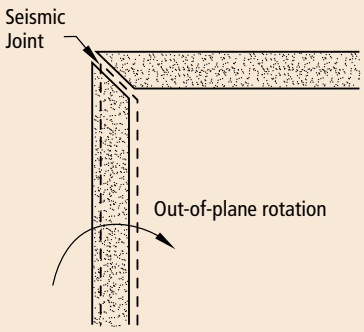

Out-of-Plane Translation is common for spandrel panels that are attached to a single level of framing, such as a perimeter beam and floor system.

Fig. 4.5.6 Joint elevation changes.

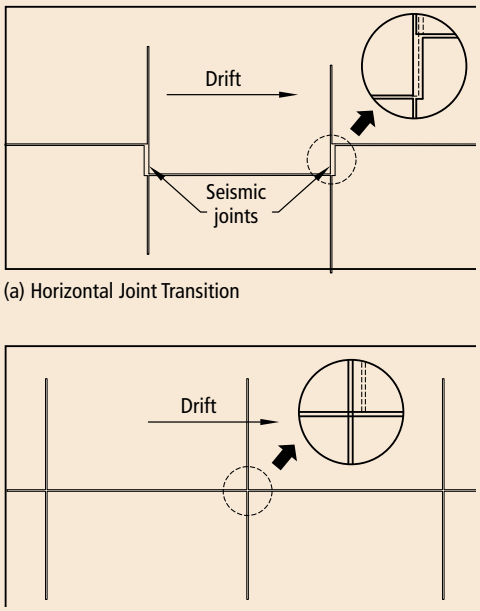

Panel geometry and joints must be configured so that panels do not collide with one another or with the supporting structure during a seismic event. When collisions occur, possible over-loading of the connections may result as well as cosmetic damage to the body of the panel. A common way to avoid collisions is to increase the width of the joint, moving adjacent panel beyond the limit of movement. A common case is shown in Fig. 4.5.5 where wall panels form the corner of the building. Wall panels are typically connected at two framing levels and consequently rotate out-of-plane in response to structure drift, in the case of the building corner, one panel will rotate while the other remains vertical resulting in the joint between the two closing up. To avoid a collision, the corner joint width must be increased in size in proportion to the anticipated story drift.

When panels are designed to translate, the horizontal joint at each level should remain at a constant elevation whenever possible, as it tracks around the perimeter of the building. Elevation changes (Fig. 4.5.6) will require seismic joints at the transitions and detract from the aesthetics of the cladding.

When a panel is subjected to an in-plane horizontal force, its connection system can make the panel rock up on one corner or translate without tipping or rocking (Fig. 4.5.7 and 4.5.8). It is essential that the poten-

Fig. 4.5.7 Cladding panel connection concepts - Seismic drift effect (Translating panels).

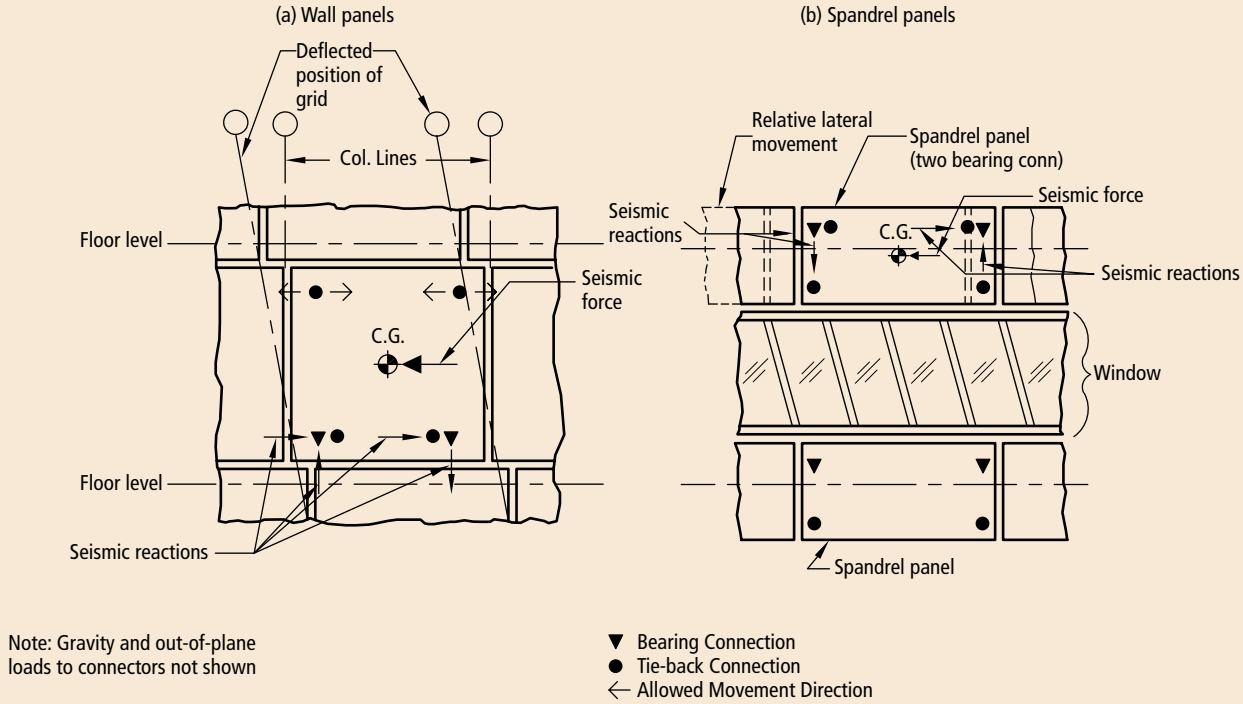

Fig. 4.5.8 Tall/narrow units.

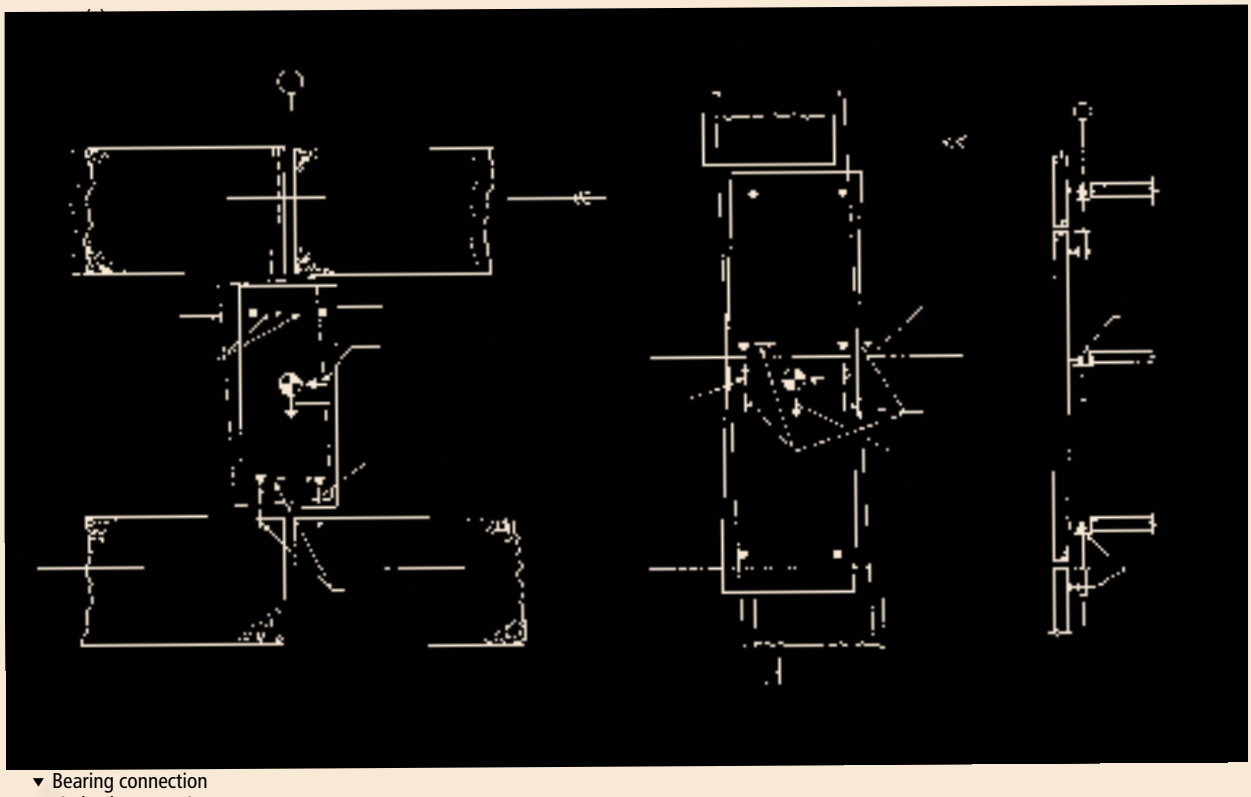

▼ Bearing connection
● Tie-back connection

Note: All connectors carry out-of-plane loads / gravity and out-of-plane loads to connectors not shown

tial movements be studied and coordinated in regard to the connection system and the joint locations and widths. Such considerations may govern the connection design or the wall's joint locations and widths.

The connection system determines panel movement in a seismic event. In the case of floor-to-floor wall panels (Fig. 4.5.7[a]), the upper tiebacks become isolation connections, preventing the building movement forces from being transmitted to the panel. The panel is rigidly fixed, to and translates with, the floor beam at the panel bottom. The seismic force in the plane of the panel creates a vertical couple and shear forces at the bearing connections, where these forces and gravity loads must be resisted. Some designers prefer to provide gravity support for the panel at the top and put the tieback connections at the bottom, see Fig. 4.5.9.

In Fig. 4.5.8(a) rigid tiebacks at the top of the panel, together with lift-off allowance at the bottom connections, force the panel to rock when subject to seismic forces, so its entire weight is being carried on one low-

Fig. 4.5.9 Tieback or push-pull connection for a tall precast spandrel attached to a steel beam. Bearing connection at top, tieback connection at bottom. Illustration: Chris Arnold / Tony Alexander, WBDG Building Envelope Study, National Institute of Building Sciences, Washington, DC.

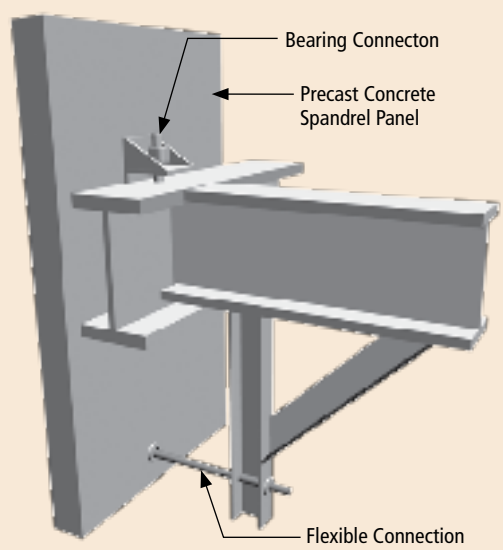

er connection. Because the movement occurs in both directions, each bearing connection must have the capacity to carry the full weight of the element. When the design intent is to allow rocking of the panels, it is critical that lift-off be allowed, without tie-down, with provisions like those shown in Fig. 4.5.67. If lift-off were prevented, the forces on the bearing connectors would be increased due to the couple between them.

If the panel is tall and narrow, like a column cover, bearing connectors can be located so the unit translates with the level of the bearing connectors (Fig. 4.5.3[b] or [c]). If these are vertically close to the panel's center of gravity, as in Figs. 4.5.3(c) and 4.5.8(b), the seismic overturn couple is minimized and the bearing connectors would carry all gravity and in-plane seismic loads. The tiebacks would then isolate both the top and bottom of the panel from their respective floors (Fig. 4.5.8[b]). An alternative seismic connection sometimes used for tall, narrow units is a single bearing connection, along with sufficient tiebacks for stability.

Historically, in high seismic areas, the most common application of architectural precast concrete has been cladding. The International Building Code and the Uniform Building Code require that wall panels, or similar non-structural elements, be designed to accommodate movements of the structure resulting from lateral forces and temperature changes. The force requirements often overshadow the importance of allowing for moisture and thermal volume changes. Panels typically have two rigid loadbearing connections, with volume change relief provided only by the ductility of the connections, and two or more tieback connections with full freedom of movement in the plane of the panels.

Building codes set the requirements for lateral forces and story drift accommodation. These parameters, which are too variable to detail in this publication, depend on seismic design category, building site, occupancy, type, and configuration and should be in the contract documents. Required drift consideration between floors can be several inches and often present a greater challenge to the designer than resisting the forces. This drift requirement is in anticipation of frame yielding to absorb seismic energy. Connections must also accommodate the movement during a seismic event either by sliding or by bending in ductile connectors. Sliding connections must have slots long enough (after installation tolerance) to account for expected travel due to story drift without binding or shearing bolts or welds. Flexible connections must have ample rod or plate length to truly bend and flex under drift without failing in shear. Careful installation and inspection is required to ensure that tolerances do not negate the available movement in a way to make the connection ineffective. Weather and corrosion protection of these sliding connections is also essential to ensure their long-term performance so the sliding effect can occur without binding. In the context of seismic connection design, there are four basic connection types:

1. Fixed connections (Fig. 4.5.10a)
2. Rocking connections (Fig. 4.5.10b)
3. Slip connections (Fig. 4.5.10c)
4. In-plane connections (Fig. 4.5.10d)

Connections that resist imposed loads in all directions are referred to as rigid connections. Rigid bearing connections are generally used in panels that translate in-plane as shown in Fig. 4.5.4a.

Bearing connections that allow vertical upward movement (lift-off) are referred to as rocking connections. This type of connection would allow the panel to rotate in-plane as shown in Fig. 4.5.4b.

Secondary connections that allow horizontal and vertical movement of the panel relative to the supporting structure but resist out-of-plane loading are called slip connections. Slip connections can be accomplished by either bolted/slotted arrangements or by flexing of the connection elements. In-plane connections resist out-of-plane and in-plane lateral loads, but allows vertical movement between the panel and supporting structure.

Connections for loadbearing wall panels are an essential part of the structural support system, and the stability of the structure may depend on them. Loadbearing wall panels may have horizontal and/or vertical joints across which forces must be transferred. Loadbearing panel connections should be designed and detailed in the same manner as connections for other precast concrete structural members. It is desirable to design loadbearing precast concrete structures with connections that allow lateral movement and rotation, and to design the structure to achieve lateral stability through the use of floor and roof diaphragms and shearwalls. Designers are referred to an extensive treatment of design methods in the *PCI Manual on Design and Typical Details of Connections for Precast and Prestressed Concrete* and the *PCI Design Handbook*.

Fig. 4.5.10 Four basic seismic connection types.

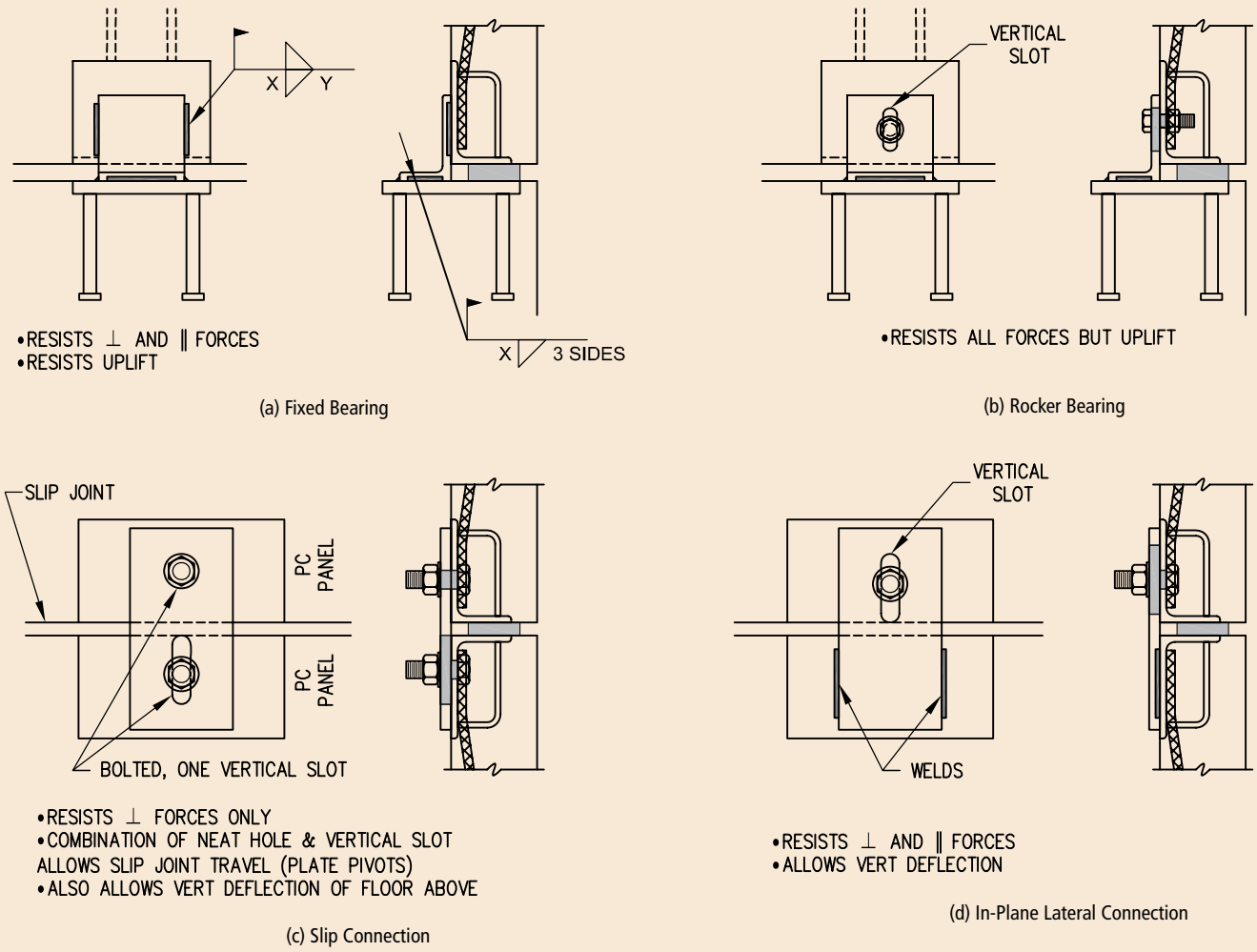

4.5.2.3 Tolerances and product interfacing

When determining clearance between a new or existing structure and a precast concrete element, dimensional variations of structures—in length, height, and plumbness—must be considered together with possible deflection, rotation, and irregularities of the supporting surfaces.

Adequate clearance and access must be provided between precast concrete units and the supporting structure to allow for product, erection and structure tolerances. Panel connections often require blockouts in the edge of floor slabs or access ports in the walls, which are filled on completion of the connection. In the case of metal deck systems, size of the blockout may dictate supplemental deck supports.

It is also important to anticipate geometric variations in the supporting structure and in the location of hardware in the design of connections (Fig. 4.5.11[a]). In this case, a preferred clearance of 2 in. (50 mm) is indicated. However, due to allowable tolerances, the actual clearance could vary. The bearing bracket should be designed for the maximum possible eccentricity.

Connections may be subjected to functional requirements such as recessing for flush floors (Fig. 4.5.11[b]) and/or exposed ceilings. The interior finish systems, furring, and fireproofing must be designed and installed to conceal the panel connection system. Allowing at least an extra $^1/_2$ in. (13 mm) between the back of the drywall and the theoretical back edge of the connection hardware is recommended. Top connections may be located above the suspended ceiling or covered by a

Fig. 4.5.11 Dimensions for design of connections methods.

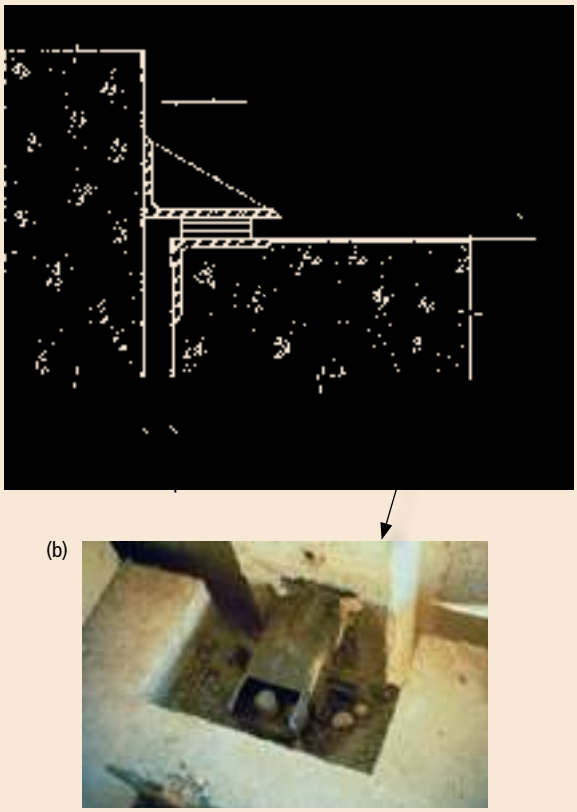

Note: 1 in. = 25.4 mm

valance. Load support connections at floor level may be embedded below the floor level or concealed together with mechanical services. These connections should be checked early in the process to ensure that recessing the embed, if necessary, will not interfere with the reinforcement in the structure and that reinforcing details account for slab recesses.

All connections should provide maximum adjustability in all directions. Oversized plates, slotted inserts, or oversized holes in connection hardware can be used to accommodate plant and field tolerances (Fig. 4.5.14) (page 329). Welds, shims, and leveling bolts are used to obtain connection adjustability at the time of installation. The adjustability of the connections facilitates the alignment of panels and joints.

Sufficient space must be provided to make the connections, including room for welding or for turning a wrench to tighten a nut. When fireproofing is used, clearances should be planned from the face of the fireproofing material.

4.5.2.4 Other detailing information

The designer should provide simple and direct load transfer paths through the connections as well as ductility within the connections. The number of load transfer points should be kept to a minimum with no more than two connections per panel to transfer gravity loads. Bearing points should occur at the same level. The EOR should clearly show on the contract documents the acceptable locations for bearing connections. Details that accommodate adequate production and erection tolerances must be provided as described in section 4.5.2.3 with the use of slotted or oversized holes or plates.

Movement allowance in the vertical and horizontal directions to prevent restraint at tieback connections can be accomplished by various means. A long, ductile tieback rod that flexes with drift is common. However, care must be taken to ensure that this type of tieback can satisfactorily resist panel forces perpendicular to the plane of the panel without buckling or excessive stress. Though costly, low-friction washers or sleeves slightly longer than the material thickness at a slot or oversize hole can be used to ensure better performance (Fig. 4.5.66[b]) (page 343). Long or medium-length rods or bolts may bind instead of slide when load is applied at the far end. If nuts or bolts are used at sliding connections, they must be prevented from either tightening or loosening with movement. This can be accomplished by using jamb nuts, patent nuts, punched threads, liquid thread locker, or tack welding the nut to a square plate washer or a separate stub bar. If large movement is expected, an articulated tieback might be considered (Fig. 4.5.66[a]).

Twisting and deflection of the panel support beams can be a concern. Where connections for cladding transmit panel vertical loads to a steel beam, they should be centered on the beam unless provisions, such as bracing, have been made to minimize torsional stresses in the supporting member. It is usually desirable to locate bearing connections on beams near the column to minimize beam twisting and deflection. Where the bearing is on a column, twisting and deflection of the beam is not a problem.

Some codes require that the anchorage of the connector be made in such a way as to distribute forces to the reinforcing steel to avert sudden or localized failure. The engagement details are left to the precast concrete engineer. In these situations, some designers

use confining hoops, deformed bar anchors, or long reinforcing bars welded to plates, rather than short headed studs or inserts in order to better distribute connection forces to a larger panel area. If anchors are used near the edge of a precast concrete panel, it is recommended that they be enclosed in sufficient reinforcing steel, such as hairpins, to distribute any load back into the panel.

Embedded anchors, inserts, plates, angles, and other cast-in items should be sufficiently anchored in the concrete and be detailed so as to not interfere with the mild steel or prestressed reinforcement. Large reinforcing bar anchors may be impractical due to their longer required development length, and/or the difficulty in accomodating the necessary larger bend radii to interface with the connection hardware. The design should ensure that interference of reinforcing and connection hardware does not interfere with concrete placement and consolidation.

In many cases, the wall panels are sufficiently outboard of the supporting frame, to require either outriggers off of the beam (or column) or long panel brackets (Fig. 4.5.25 through 4.5.28) (page 335). For seismic forces in the plane of the panel, anchorage of the longer panel-bearing brackets can become quite cumbersome when the forces are combined with gravity. If a separate shear transfer plate is added to the system, such as in Fig. 4.5.49 (page 339), the bracket anchorage problem becomes more manageable because the shear plate relieves the bracket connection from carrying some of the seismic forces.

The type of connection shown in Fig. 4.5.11, with different shapes or angles (gusseted if required), is a common bearing connection. Such connections are fastened to the concrete using anchors (Fig. 4.5.65) (page 342). The connection assembly must be located accurately in the precast concrete unit to ensure proper functioning. The anchors should be placed flush with and perpendicular to the surface.

Bearing pads are sometimes used to distribute loads over the bearing area and to accommodate construction, fabrication, and erection irregularities. These pads reduce the concentration of forces at the connection by deforming readily within their thickness or allowing slippage. The physical characteristics of bearing pad materials necessary to satisfy this function are:

1. Permanence and stability.
2. Ability to equalize uneven surfaces and avoid point pressure.
3. Ability to accommodate movements.

Erection drawings should clearly indicate the type, location, and orientation of all bearing pads. The pad supplier or precaster should be consulted when selecting bearing pads. The type of bearing pad required will depend on the imposed loads and the expected movements of the precast concrete element and support structure. Two types of bearing pad materials are:

1. Elastomerics with known compression, shear, and friction properties and ability to deform with movements.
2. Plastics with low-friction coefficients along with high compression and shear strength.

If significant movements are expected, soft pads or low-friction rigid pads should be used. However, if relative movement is not expected, a bed of rigid material, such as grout or drypack, can be used at the bearing locations.

Connections cannot be designed without consideration of the interior finishes and vice-versa. The interior finish may limit both the type of connection and its location. In many cases a full-depth blockout (down to a supporting beam) in a floor slab or recessing of a connection plate is sufficient accommodation for interior finishes. It is not practical to show the innumerable variations in connections and finishes that may be encountered.

4.5.3 Handling and Erection Considerations

In order to achieve the optimum overall economy of a precast concrete project, it is important to plan for a minimum of handling of precast concrete components and erection time at the jobsite. Selection of suitable connections is also essential.

Allowing the precaster to play an active role in the development of connection concepts will result in an optimum solution for achieving efficient erection. It is important that the designer discuss the use of safe, efficient, and economical lifting hardware and connections to facilitate erection with the local precast concrete manufacturer and the erector early in the project planning stage. The precaster or erector may prefer certain details or procedures not anticipated by the de-

signer. Allowing alternate solutions will usually result in more economical and better performing connections.

The following is a list of items that should be considered during the selection, design, and detailing of connections to facilitate safe and speedy erection:

1. Hoisting and setting the precast concrete pieces is usually the most expensive and time-consuming element of erection. Connections should be designed so that the erector can safely secure the member to the structure and release from the crane in a minimal amount of time. If necessary, temporary bracing, leveling devices, or connections can be used, with final adjustment and alignment in all directions relative to the structure and adjacent components completed after release from the crane. This is particularly important if the permanent connection requires field welding, grouting, drypacking, or placement of cast-in-place concrete. Temporary connections should not interfere with or delay placement of subsequent members. Temporary connections may have to be relieved or cut loose prior to completion of the permanent connections.

2. A certain amount of vertical adjustment for alignment at the connection is normal. Precasters have a number of different methods for alignment. The common approaches for panel alignment are illustrated in Fig. 4.5.12. The choice between these procedures and alternates should be the option of the precaster and/or erector.

   Final panel alignment should not be attempted until all the panels on a beam are in place. As part of the preliminary layout, the erector should note the theoretical centerlines of the joints so that the panels may be centered between these lines, with minor adjustments to equalize joint widths.

   A popular method for vertical adjustment shown in Fig. 4.5.12(b), uses a leveling bolt. The panel is usually set a little high and lowered to the correct elevation with a wrench. The bolts may get very large for heavy panels and often have a rounded point to prevent "walking" when turned and to ease horizontal adjustments. A head-down carriage bolt can also be used.

3. When a unit cannot be erected within the tolerances assumed in the connection design, the structural adequacy of the connection should be checked by the responsible engineer, and if required, the connection design should be modified. No unit should be left in an unsafe condition. Field changes to connections that could induce additional stresses in the unit or connection assembly (other than adjustments within the prescribed tolerances) should only be made after review by the connection designer.

4. Connections should be planned so that they are accessible to workers from a stable deck or platform. Erection techniques that require temporary scaffolding should be avoided, if possible. Room to turn wrenches should be provided for bolted connections. Foundation piers should extend above rough grade so that the anchor bolts can be readily adjusted during erection and so that the base plate need not be grouted down in a hole, which can fill with water and debris. Properly drypacking wall panel bases in a narrow excavation is difficult.

Fig. 4.5.12 Vertical adjustment.

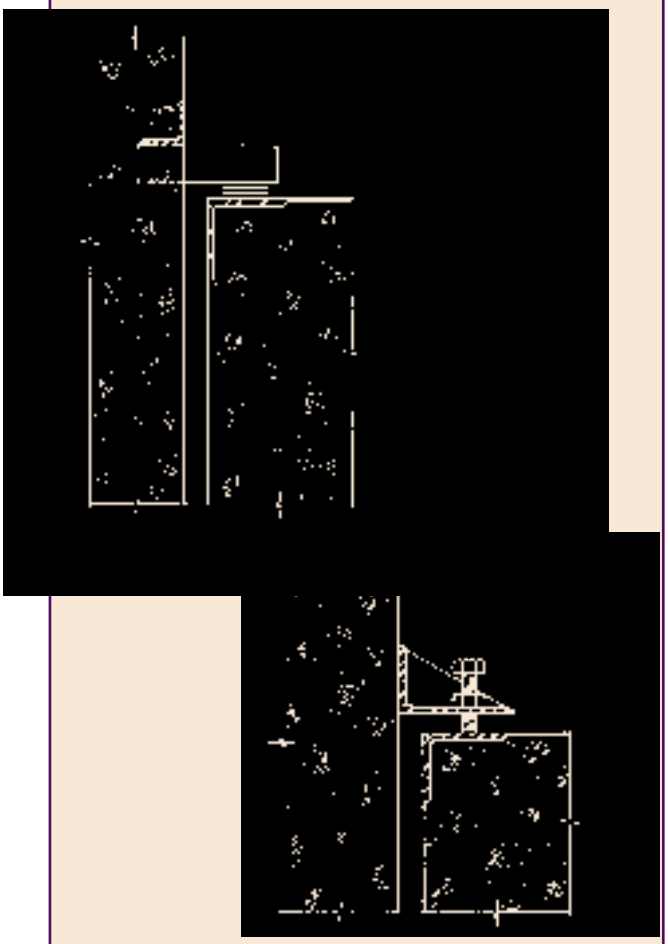

5. Connections that serve similar functions within the building should be standardized as much as possible. Standardization of details facilitates selection and shipment of connection items to the project. As workers become familiar with the procedures required to make the connection, productivity is enhanced, and the potential for error is reduced. Whenever possible, items such as field bolts and loose angles should be of the same size for all connections. Bolts with National Coarse or coil threads are most commonly used.
6. Connection details should allow erection to proceed independent of ambient temperatures without temporary protective measures. Materials such as grout, drypack, cast-in-place concrete, and epoxies usually need protection or other special provisions when placed in cold weather. Also, welding is slower and not as simple when the ambient temperature is very low. If the connections are designed so that these processes must be completed before erection can continue, the cost of erection is increased and delays may result.
7. Connections that are not susceptible to damage in handling should be used. Reinforcing bars, steel plates, dowels, and bolts (particularly threads) that project from the precast concrete unit are subject to damage during handling and should be avoided whenever possible. Connectors attached to the panel with threaded inserts may be removed during shipping to minimize damage and facilitate placement of units on trucks. Threads of inserts and projecting bolts should be protected from damage and rust. The precast concrete manufacturer should clean out and cap or seal sleeves or inserts until used, to prevent dirt and water from entering and freezing or causing corrosion.
8. When cast-in-place concrete, grout, or drypack is required to complete a connection, the detail should provide for self forming, if possible. When not practical, the connection should allow for easy placement and removal of formwork. Field patching and finishing should be kept to a minimum.

With steel frames, it may be necessary to determine how far ahead its final connections and/or floor slabs must be completed, and what the minimum strength should be for cast-in-place concrete structures, prior to loading them with precast concrete units.

In the case of high-rise, cast-in-place concrete structures, delay in erecting precast concrete units will allow some shrinkage and creep to take place. Connections and joints should be designed to accommodate shrinkage and creep.

If the structural frame deflection is sensitive to the location or eccentricity of the connection, limits of their parameters should be given by the EOR.

For loadbearing units, the use of non-metallic shims or bearing pads, such as neoprene or plastic, may be used where stresses are not excessive and the risk of damage to concrete edges is negligible. Any permanent shims should be non-corrosive or protected so staining does not occur. Permanent shims should be sized and positioned so they do not interfere with placement of joint sealants.

4.5.4 Handling and Lifting Devices

The subject of handling and lifting devices is included in this section because their design and selection are determined by requirements similar to those governing connections.

The design of lifting devices, including checking of stresses in units during handling, is normally the responsibility of the precaster. Erection inserts cast in precast concrete members vary depending on the member's use in the structure, the size and shape of the member, and the precast concrete manufacturer's preference.

The location of lifting devices can affect the ease of erection and connection of the precast concrete unit to the structure. Lifting points should be compatible with the method of shipping (flat or on edge) and be placed so that the crane lines do not interfere with the structure. Lifting devices should be placed on the precast concrete units so that changes to the rigging can be avoided. The precast concrete manufacturer should clean and cap or seal lifting inserts until used by the erector, to prevent dirt and water from entering and freezing.

The design of lifting devices should consider impact loads incurred during transit and handling of the units. The strength of the precast concrete at the time of stripping may only be a fraction of the design strength, and is a design consideration. Since lifting devices are subject to dynamic loads, ductility should be considered.

Connection hardware should not be used for lifting or handling unless reviewed and approved by the con-

nection designer. The final connections should not be used for erection if they would interfere with the process of attaching the unit to the structure.

Lifting devices can be prestressing strand or aircraft cable loops that project from the precast concrete, coil thread inserts, or proprietary lifting hardware. All require engineering and adequate safety factors.

If possible, the placing of lifting and handling devices should be planned so that little or no patching will be required after use. When temporary lifting and handling devices are located in finished edges or exposed surfaces, they must be recessed and patched to match adjacent surfaces. Often, these recesses may be finished at a later date with prior designer approval. Specialized lifting equipment may also be used to eliminate the necessity of patching exposed lifting and handling devices.

Details of lifting devices should include the consideration of corrosion and possible staining of the finished product if they are to be left in the units. If the handling devices interfere with any other function or trade, erection drawings should include removal instructions.

4.5.5 Manufacturing Considerations

Because precast concrete plant working conditions, quality control, and inspection are superior to those in the field and less dependent on climatic factors, operations demanding high-quality standards are most efficiently and economically performed in the plant. Connections should be detailed so that only the least complicated aspects are completed in the field.

Economy in manufacturing and incorporation of hardware items into precast concrete units demand simplicity and repetition. These demands often result in the use of one connection detail for several types of units on a job. Although such connections must be designed for the most severe load conditions, the cost of the extra material required will often be less than the detailing, manufacturing, storing, and scheduling costs for a different connection. As a safeguard against human error, changes in dimensions and materials used in connection hardware should be in increments large enough for visual recognition.

Precast concrete units are usually cast in forms that leave only the top accessible; if one item must be threaded through and around other items, labor costs can be significantly increased. When reinforcing bars and connection anchors are concentrated in one location there may be difficulty in placing and consolidating the concrete that can lead to honeycombing unless special care is taken. Reinforcing bar bend radii, if not considered, can cause fit problems and leave some regions unreinforced.

A major requirement for the incorporation of hardware in precast concrete units is the positioning of the hardware to required tolerances. It is often advisable for the precaster to provide jigs, positioning fixtures, or mold brackets to ensure proper location, and to maintain tolerances while avoiding skewed or misaligned hardware.

Hardware placed in precast concrete panels often has provisions (holes, lugs, and nuts.) so that they may be secured to jigs, but such details should be left to the precaster. Hardware projections, which require cutting through the forms, are difficult and costly to place. Where possible, projecting hardware should be limited to the top of the element as cast. Even this placement increases labor by inhibiting the finishing of the top surface. The second preference is for the projection to be on the side forms. The least desirable location for a projection is on the down or finished face, unless it is welded or bolted on after stripping from mold.

Avoid casting wood (nailers or lath) in precast concrete. The stress induced by the swelling of the wood can cause cracking of the concrete.

Dissimilar metals should not be in contact with each other unless experience has shown that no detrimental galvanic reaction will occur. Casting aluminum into concrete should be avoided unless a permanent coating dielectrically insulates it, such as bituminous paint or zinc chromate primer followed by one or two coats of aluminum metal-and-masonry paint. Also, polyethylene or similar nonabsorptive tapes or gaskets can be used to provide local insulation between any dissimilar metals.

Design of connections should consider the ease of inspection during casting and after completion of installation. Connections should be protected from any muriatic (dilute hydrochloric) acid used to finish or clean the units.

4.5.6 Connection Hardware and Materials

A wide variety of hardware, including reinforcing bars, deformed bar anchors, headed studs, various in-

serts, structural steel shapes, bolts, threaded rods, and other materials are used in connections. In order to achieve strength, the hardware must be properly anchored into the concrete. Plate connections are widely used in combination with flat metal straps, reinforcing bars, or metal studs welded to the plate for anchorage. The exterior surface of the plate is normally flush with the concrete face and provides a weld area for fastening it to the connector body. By replacing the flat weld plate with an embedded structural shape, additional anchorage and strength can be provided. The steel for anchors should be of a grade and strength similar to the hardware material in which it anchors, to minimize welding complications.

Careful placement to required tolerances, including inclination of protruding shapes, is important because the bearing surfaces of the panel and the structure must be parallel in order to obtain optimum bearing and load transfer. A widely used anchor is the threaded insert, and numerous variations are available, including some that are adjustable.

Inserts are easily located and commonly held by bolts and jigs during casting operations. It is equally important to place inserts so that the depth of thread is constant for the same size insert throughout a particular job. Otherwise, an erection crew may not always engage adequate thread. Also, a typical size and thread depth for inserts on projects will minimize the possibility of erection crews using the incorrect size and length of bolts.

Hardware to be placed at the project site should be detailed with provisions for simple and safe securing and be oversized to accommodate tolerances in placing. Angles with suitable nail or screw holes for fastening to side forms are superior to flat plates for accurate placement. Where large horizontal hardware surfaces are required, it is advisable to provide air release holes to prevent air pockets and ensure proper concrete consolidation under such surfaces. Hardware for cast-in-place concrete structures should be detailed to provide the proper anchorage. Anchorage details should allow placing with reasonable clearance from reinforcing steel in the structure.

The cost of field hardware may be reduced if one item can be used for connecting two adjacent units. This requires that connections in the precast concrete units be located close to the edges, which often facilitates production. The practical considerations for detailing of field hardware are equally applicable to plant hardware and are normally part of the precaster's detailing.

4.5.7 Corrosion Protection of Connections

The need for protection from corrosion will depend on the actual conditions to which the connections will be exposed to in service.The corrosion rate of unprotected steel typically ranges from 0.001 in. (0.025 mm) to 0.005 in. (0.125 mm) per year when exposed to air and moisture for a significant part of its life.

Connection hardware generally needs protection if exposed to the weather in service or a corrosive environment. Such hardware should be completely encased in concrete (partially embedded members should be primed to a depth of 2 in. [50mm]) or otherwise suitably protected where there is any danger of water contact. The most common condition requiring protection is exposure to climatic conditions.

Protection may be provided by:

1. Paint with shop primer.
2. Coating with zinc-rich paint (95% pure zinc in dried film).
3. Chromate plating.
4. Zinc metallizing or plating.
5. Hot dip galvanizing.
6. Epoxy coating.
7. Stainless steel.

The cost of protection increases in the order of listing. Proper cleaning of hardware prior to protective treatment is important. It should be noted that the threaded parts of bolts, nuts, or plates should be electroplated, not epoxy coated or galvanized, unless they are subsequently rethreaded prior to use or threads are oversized.

Where connections requiring protection are not readily accessible for the application of zinc-rich paint or metallizing after erection, they should be metallized or galvanized prior to erection and the connections bolted, where possible. If welding is required as part of the field assembly, the weld slag must be removed and the weld painted or otherwise repaired to match the parent material. For galvanized items, the galvanizing repair paint should be a minimum of 0.004 in. (0.10 mm) thick and conform to ASTM A780.

Special care should be taken when galvanized as-

semblies are used. Many parts of connection components are fabricated using cold-rolled steel or cold working techniques, such as bending of anchor bars. Any form of cold working reduces the ductility of steel. Operations such as punching holes, notching, shearing, and sharp bending may lead to strain-age embrittlement of susceptible steels. This is particularly the case with high-carbon-content steel. The embrittlement may not be evident until after the work has been galvanized. This occurs because aging is relatively slow at ambient temperatures but is more rapid at the elevated temperature of the galvanizing bath.

The recommendations of the American Hot Dip Galvanizers Association and the practices given in ASTM A143, *Recommended Practice for Safeguarding Against Embrittlement of Hot Dip Galvanized Structural Steel Products and Procedure for Detecting Embrittlement,* and CSA Specification G164, *Galvanizing of Irregularly Shaped Articles*, should be followed.

Some designers specify the use of stainless steel connections in highly corrosive environments to prevent long-term corrosion; however, it is extremely costly. While this may appear to be the best possible corrosion protection, designers are cautioned that the welding of stainless steel produces more heat than conventional welding. The increased heat input, plus a higher coefficient of thermal expansion, may create adverse hardware expansion and greater cracking potential in the adjacent concrete, thus potentially promoting accelerated long-term deterioration. If welding is to be done on stainless steel connection plates, edges should be kept free from adjacent concrete to allow expansion during welding without spalling the concrete.

Fireproofing of connections may be necessary, depending on codes and/or insurance requirements. In many cases, fireproofing with concrete cover will also provide corrosion protection. Many types of connections in precast concrete construction are not vulnerable to the effects of fire and, consequently, require no special treatment. For example, direct bearing areas between precast concrete panels and footings or beams that support them do not generally require any special fire protection, nor do concrete haunches.

If the panels rest on elastomeric pads or other combustible materials, protection of the pads is not generally required because pad deterioration will not cause collapse. Nevertheless, after a fire, the pads would probably have to be replaced, so protecting the pads might prevent the need for replacement. If the connections are to be fireproofed or concealed, this fact should be indicated in the contract documents.

Connections that can be weakened by fire, and thereby jeopardize the structure's load-carrying capacity, should be protected to the same degree as required for the structural frame. If, for example, an exposed steel bracket supports a precast concrete element that is required to have a designated fire rating, the steel bracket must have the same fire rating.

Many connections simply provide stability and are under little or no stress in service. While fire could substantially reduce the strength of such a connections, no fire protection is necessary. Connections that have steel elements encased in concrete, drypacking, or grout after erection usually need no additional protection.

There is evidence that exposed steel hardware used in connections is less susceptible to fire-related strength reduction than other steel members. This is because the concrete provides a "heat sink," which draws off the heat and reduces the temperature of the steel.

Fireproofing of connections is usually accomplished with sprayed cementitious fireproofing, or mineral fiber, intumescent mastic compounds, or enclosed with gypsum wall board.

Figure 4.5.13(a) shows the thicknesses of various, commonly used, fire-protection materials required for fire endurances up to four hours when applied to connections comprised of structural steel shapes. The values shown are based on a critical steel temperature of 1000 °F (538 °C) (that is, a stress-strength ratio of about 65%). The values in Fig. 4.5.13(b) are applicable to concrete or drypack mortar encasement of structural steel shapes used as brackets.

When a rational analysis or design for fireproofing is not performed and concrete is used to fireproof the connections in the field, a conservative estimate would suggest that such concrete should have a thickness in inches corresponding to the specified hours of fire rating. Unless the nature of the detail itself supports such concrete, it should be reinforced with a light welded-wire reinforcement.

4.5.8 Fasteners in Connections

Shim stacks are used to transmit bearing loads between elements or to the supporting structure. Shims can be made from plastic, steel, neoprene, or other

Fig. 4.5.13 Thickness of fire protection materials on steel connection components.

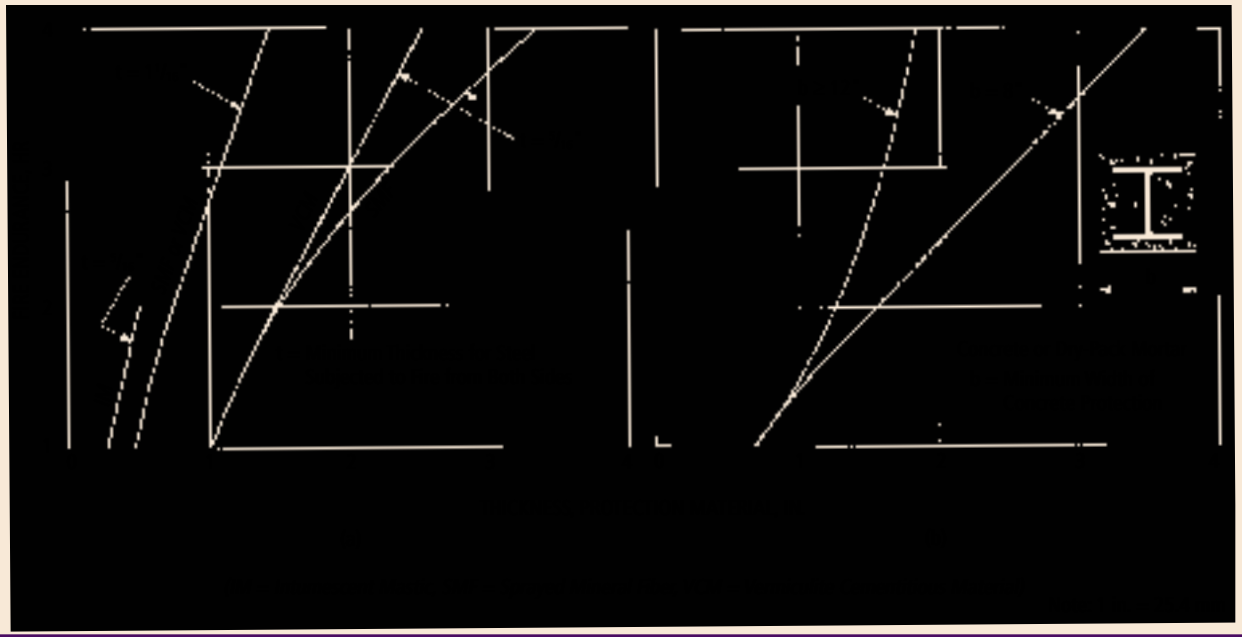

suitable materials and are often used as spacers or as means of leveling or aligning adjacent components. Shim stacks often lead to multiple shims, which are not suitable for transmitting lateral forces. Shims range in thickness from $^1/_{16}$ in. to 2 in. (1.6 to 50 mm). One-piece shim blocks may be used and are favored by some erectors when they are combined with reliable panel dimensions and a survey of the structure prior to the placing of panels. When shim stacks are to carry loads permanently it may be advisable to weld them together, especially if they are used at a sliding connection. Such stacks might need to be supplemented with separate shear plates similar to those in Figs. 4.5.45 through 4.5.51 (pages 338 to 339) for horizontal loads. Temporary shims should be removed from joints of non-loadbearing units after connections are completed and before applying sealant.

Welded connections for cladding panels are structurally efficient and easily adapted to varying field conditions. Their strength depends on reliable workmanship and the compatibility of welding materials with the metal to be joined. Welded connections can be completed only after final alignment. Where only a few field connections are to be welded, it is usually more economical to use an alternate connection rather than require another trade (welders) on the project.

Hoisting and setting time is critical for economical erection. Welding that must be executed prior to the release of the unit from hoisting equipment should be minimized. If structural considerations indicate the necessity for welding, the precast concrete erector may temporarily support and brace the unit so the crane will not be tied up. Bolted connections minimize this concern. Provisions must be made to maintain the unit safely in place until final connections are completed. Welding should be performed in accordance with the erection drawings by personnel that have been certified for the welding procedures specified. These drawings should clearly specify type, size, length and location of welds, and any critical sequences. All welding, including tack welds, should be made in accordance with the applicable provisions of the American Welding Society.

It is both difficult and expensive to weld overhead or in confined places, so these situations should be avoided. Welding on galvanized hardware requires proper procedures to avoid contamination due to poor-weld quality. Cold galvanizing, zinc-rich paint should be applied over welded areas to replace the removed galvanizing.

When welding is performed on components that are embedded in concrete, thermal expansion and distortion of the steel may destroy the bond between the steel and concrete or induce cracking or spalling in the surrounding concrete.

The extent of cracking and distortion of the metal is dependent on the amount of heat generated during

welding and the stiffness of the steel member. Heat may be reduced by:

1. Use of low-heat welding rods of small diameter.
2. Use of intermittent, rather than continuous, welds.
3. Use of smaller welds and multiple passes.

Using thicker steel sections can minimize distortion. A minimum of $^1/_4$ in. (6 mm) is recommended for plates. Some precasters line the metal with sealing foams, clay, or other materials to minimize the risk of the concrete cracking, especially if the metal is thinner than $^3/_8$ in. (10 mm).

Cracks in concrete may be wider during welding, but will usually close significantly after the steel cools.

Bolted connections often simplify and speed up the erection operation because the connection is positive immediately. Final alignment and adjustment of the panel can be made later without using valuable crane time. In using bolted connections, it is desirable to standardize the size of attachment hardware (clip angles and bolts). Standardization minimizes errors and inventory of hardware and improves productivity. With bolted connections, $^3/_4$, 1, or $1^1/_4$ in. (19, 25, or 32 mm) diameter bolts with National Coarse or coil threads are considered standard in the precast concrete industry and should be used when possible. Coil thread stock or coil bolts are often used in lieu of National Coarse threaded stock or bolts to minimize the time required to make connections and reduce the risk of thread damage.

Bolted connections should allow for industry erection tolerances. Slotted or oversized holes should be provided to accomodate variation and tolerance when they do not conflict with the design intent, Fig. 4.5.14.

Precautions must be taken to ensure adequate engagement of threads in all threaded inserts. Following erection of a precast concrete unit where slotted connections are used, a check of bolt position and tightness should be made. For sliding connections, the bolt should be properly secured, with lock washers, tack welding, or other means to prevent tightening or loosening. They should be snug, but not so tight that they cannot move within the slot. Low friction washers (Teflon® or nylon) may be used to ensure movement capability. Roughness at sheared or flame-cut edges should be removed. Washers, when used, should be large enough to overlap the sides of slots or oversize holes, and allow for full movement. Plate washers with off-center holes allow maximum flexibility without requiring separate size parts (Fig. 4.5.14[c]). Adjustable inserts can also allow for movement.

Fig. 4.5.14 Slotted or oversize holes.

(a) Two-axis adjustability during erection. Welding square plate washer after alignment limits movement to one axis.

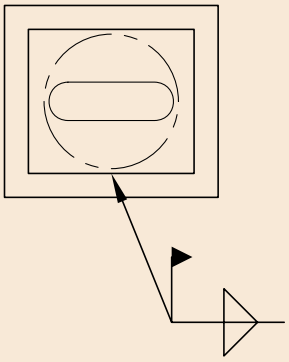

(b) Alternate adjustable insert

Two axis adjustability via slotted insert and slotted washer with perpendicular axes

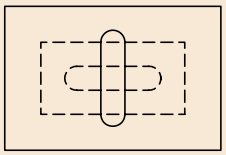

(c) Off-center hole in square plate washer takes full advantage of oversize hole, yet allows maximum weld length in spite of varying dimension to an obstruction during alignment

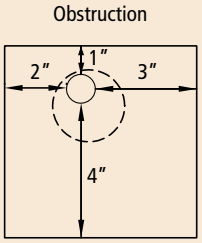

When the connection cannot be made because the insert is out of place or missing, the connection designer should approve any modifications.

Expansion anchors are often used as connections at foundations or for corrective measures when cast-in inserts are mislocated or omitted. They are inserted into drilled holes in hardened concrete. Performance of these anchors is dependent on the quality of field workmanship. Strength is obtained by tightening of the bolt or nut, thus expanding parts of the anchor, which exert lateral pressure on the concrete. Types that increase, rather than reduce, expansion under load are preferable. Anchorage strength depends entirely on the expansion force. For connection reliability, the importance of correct installation and quality control cannot be overemphasized. Holes for expansion anchors must be drilled straight, deep enough, with the proper diameter, and be cleaned out. The minimum distance to the edge of the concrete and spacing between

bolts should be based on the anchor manufacturer's recommendations.

The performance of expansion anchors when subjected to stress reversals, vibrations, or earthquake loading is such that the designer should carefully consider their use for these load conditions. These anchors should meet the requirements of *ACI 318, Appendix D*.

Chemical anchors (resin capsule or epoxy anchors) could be considered for corrective measures or for heavy loads. However, chemical anchors may degrade at temperatures in the 140 to 150 °F (60 to 66 °C) range. Such temperatures may be experienced in warm climates, particularly in façade panels with dark aggregates. Chemical anchors may not be allowed in fire-rated connection assemblies. Manufacturers' recommendations and local code provisions for installation must be followed.

Grouting or drypacking of connections is not widely used, apart from base plates or loadbearing units. The difficulty in maintaining exact elevations and the inability to allow movements and still maintain weather tightness must also be considered. Grouting should be used carefully when installed during temperatures below or near freezing. Units with joints that are to be drypacked are usually supported with shims or leveling bolts until drypack has achieved adequate strength. Shims used for this purpose could be subsequently removed to prevent them from permanently carrying the load or to facilitate joint sealant installation. A drypacked joint requires a joint wider than 1 in. (25 mm) for best results.

Grouted dowel/anchor bolt connections depend on their diameter, embedded length, and bond developed. Placement of grout during erection usually slows down the erection process. Any necessary adjustment that is made after initial set of the grout may destroy bond and reduce strength. It may be better to provide supplemental bolted connections to expedite erection.

Erection drawings should show the required grout strength:

1. Before erection can continue.
2. Before bracing can be removed.
3. At 28 days.

Pressure grouting has been successfully employed in the joints in a number of cases. In order to contain the pressure grout, special neoprene gaskets with suitable vents are usually designed specifically for the project. Grout is usually injected from the bottom to minimize voids.

Post-Tensioning may be used to make field connections between precast concrete members using either bonded or unbonded tendons installed in preformed voids or ducts. Bonded tendons are made monolithic with the member and protected from corrosion by grouting after the stressing operation is completed. Unbonded tendons are protected against corrosion by a properly applied preventive coating. The unbonded tendons are connected to the member only through the anchorage hardware, which also must be protected from corrosion and fire where appropriate. In the right circumstances, unbonded tendons can absorb substantial seismic energy.

Erection drawings should show post-tensioning details and instructions. Bracing may need to remain until tensioning is complete.

4.5.9 Supply of Hardware for Connections

The responsibility for supplying **field hardware** to be placed on or in the structure in order to receive the precast concrete units depends on the type of structure and varies with local practice. The furnishing and placing of the hardware should be clearly defined in the bid and contract documents. Hardware should be incorporated into the structure within specified PCI tolerances according to a predetermined and agreed upon schedule to avoid delays or interference with the precast concrete erection and the project schedule.

1. **Building frame of structural steel**. Projecting brackets, kickers, hardware, and bracing for precast concrete connections that are integral to the frame are preferably supplied and installed as part of the structural steel contract for reasons of economy (minimizes the cost of crew and equipment standby). This requires sufficient coordination time to provide proper hardware locations before detailing and fabrication. It is recommended that the precaster be brought "on board" before the structural steel is bid, to allow for the design and detailing of the precast concrete connections to be incorporated into the steel bid. If added later, these items are likely to cost more than if included in the original steel bid.

2. **Building frame of cast-in-place concrete.** Field hardware may be supplied by the precaster, the GC, or be a part of the miscellaneous steel subcontract. It is recommended that the precaster supply this hardware, because this method usually reduces the problems of detailing and coordination. Hardware is placed by the GC, or the concrete subcontractor, to a layout drawing prepared by the precast concrete manufacturer. In any case, award of the precast concrete contract must be timely to allow design, detailing, and fabrication of embedded items to be in sequence with casting schedules.

   If anchors or other structural items shown on the precast concrete manufacturer's approved drawings cannot be accommodated because of mislocation, unforeseen reinforcing complications, or the work of other trades, the GC shall obtain approval for any modifications by both the EOR and the precast concrete manufacturer to ensure the required structural adequacy of the hardware.

Field-installed, pre-erection hardware consists of miscellaneous loose steel pre-welded or pre-bolted to the structure prior to beginning the panel installation. It is customary for the precast concrete manufacturer to supply this erection hardware even when not performing the actual erection.

Erection hardware is the loose hardware needed in the field for final connection of the panel and is normally supplied by the precaster.

Accessory hardware, if required to be cast into the precast concrete units (such as electrical boxes, conduit, window inserts, fastenings for other trades, and dovetails for flashing), should be designed and supplied by the trade requiring them. If inserts are used, their locations should be given on the approved shop drawings of both trades.

4.5.10 Connection Details

This section shows typical details for some of the more commonly used connections for cladding panels and loadbearing precast concrete walls, as well as other connections that may be useful in special applications. The details included are not exhaustive. They should not be considered as "standard," but rather, as concepts on which to build. Detailed design information, such as component sizes, weld and anchorage lengths, joint sizes, and bearing pad thicknesses is purposely omitted.

There are many possible combinations of anchors, plates, steel shapes, and bolts to form various connection assemblies. The details and final assemblies selected should be optimized considering design criteria, production and erection methods, tolerances, and economy. Common practice by precast concrete manufacturers in a given area may also influence the final selection of details on a particular project. The connection details are not numbered in any order of preference.

It is not the intent to limit the type of anchorage of any connector to the precast concrete to that shown in the figures. A variety of anchors are shown in Fig. 4.5.65, which are generally interchangeable and must be integrated with the reinforcement. This is an engineering task required for each individual project. The details may sometimes have to be combined to accomplish the intended purposes. For example, Fig. 4.5.15 and Fig. 4.5.17 are often combined, and Fig. 4.5.46 shows how connector anchor loads can be minimized.

All connections must consider tolerances as outlined in Section 4.5.2.3.

The examples shown cover the following broad categories:

Fig. 4.5.15 to 22	Direct bearing	DB 1-8
Fig. 4.5.23 to 28	Eccentric bearing	EB 1-6
Fig. 4.5.29 to 36	Welded tieback	WTB 1-8
Fig. 4.5.37 to 44	Bolted tieback	BTB 1-8
Fig. 4.5.45 to 51	Shear plate	SP 1-7
Fig. 4.5.52 to 55	Panel to panel alignment	PPA 1-4
Fig. 4.5.56 to 61	Column cover	CC 1-6
Fig. 4.5.62	Beam cover	BC 1
Fig. 4.5.63	Soffit hanger	SH 1
Fig. 4.5.64 to 69	Special conditions	SC 1-7
Fig. 4.5.70 to 74	Bearing wall to foundation	BWF 1-5
Fig. 4.5.75 to 77	Slab to bearing wall	SBW 1-3
Fig. 4.5.78	Slab to side wall	SSW 1
Fig. 4.5.79	Wall to wall	WW 1

Bearing (direct and eccentric) connections are intended to transfer vertical loads to the supporting structure or foundation. Bearing should be provided at no more than two points per panel, and at just one level of the structure. Bearing can be either directly in the plane of the panel along the bottom edge, or eccentric using continuous or localized reinforced con-

crete corbels or haunches, cast-in steel shapes, or attached panel brackets. Transfer of forces perpendicular to the panel is provided by various tieback arrangements. Adjustability in the support system generally necessitates the use of shims, leveling bolts, bearing pads, and oversized or slotted holes.

Direct bearing connections are used primarily for panels resting on foundations or rigid supports where movements are negligible. This includes cases where panels are stacked and self supporting for vertical loads with tieback connections to the structural frame, floor, or roof to resist forces perpendicular to the panel.

Eccentric bearing connections are usually used for cladding panels when movements of the support system are possible. Cladding panels are, by definition, fastened to and/or supported by a structure located in a different plane. Eccentric bearing connectors (corbel or panel bracket) cause permanent bending stresses in the supported panel that must be accommodated. Concrete haunches or corbels also provide a solution for heavy bending within the panel. Bending combined with tension, shear, and torsion may have to be resisted by the connection and, in turn, the structure, depending on the type of connection and load transfer details.

If leveling bolts and shear plates are used, the shear plates are proportioned for all lateral loads (Fig. 4.5.25).

The leveling bolt is usually left in place to carry the vertical load. If shims are used instead of leveling bolts, and lateral loads are to be carried, a weld plate is recommended, because the welding of shim edges is usually unreliable for transmitting significant forces. The erector's individual preference for shims or leveling bolts should be allowed.

Bearing connections are usually, but not always, combined with tiebacks.

Tieback (welded or bolted) connections are primarily intended to keep the precast concrete unit in a plumb position and to resist wind and seismic loads perpendicular to the panel. Welded tiebacks often require temporary bracing during alignment. Tiebacks may be designed to take forces in the plane of the panel, or isolate them to allow frame distortions independent of the panel and allow movement vertically and/or horizontally.

Shear plates are generally welded and serve primarily to provide restraint for longitudinal forces in the plane of the panel. They usually also carry loads perpendicular to the panel, acting as a tieback connection as well. Because seismic force is the most common in-plane force, these plates are sometimes referred to as seismic shear plates. It is, in many cases, uneconomical to carry longitudinal forces on longer panel brackets of eccentric bearing connections because their anchorage loads become very high. In such cases, the shear plate connection is used to reduce the load on the anchors (Fig 4.5.46). Longitudinal force transfer on spandrels, for example, can be accomplished near mid-length of the member to minimize volume change restraint forces that would otherwise be additive to the longitudinal seismic forces.

Panel-to-panel alignment connections are used to adjust precast concrete units' relative positions with respect to adjacent units; they do not usually transfer design loads. Out-of-plane alignment of panels is sometimes necessary, especially if they are very slender and flexible and have warps or bows prior to erection.

Column and beam cover connections are used when precast concrete panels serve as covers over steel or cast-in-place concrete columns and beams. The cover units are generally supported by the structural column or beam and carry no load other than their own weight, wind, and seismic forces. The weight of a column cover section is normally supported at one level. Tieback connections for lateral load transfer and stability occur at multiple levels. Connections must have sufficient adjustability to compensate for tolerances of the structural system. Column cover connections are often difficult to reach, and once made, difficult to adjust. For thin flat units, when access is available, consideration should be given to providing an intermediate connection for lateral support and restraint of bowing. "Blind" connections, made by welding into joints between the precast concrete elements, are sometimes necessary to complete the final enclosure.

Soffit hanger connections can be made by modifying many of the tieback connections previously discussed. If long, flexible hanger elements are used, a lateral brace may be provided for horizontal stability.

Special conditions are presented in Figs. 4.5.64 through 4.5.69. These are suggested to help solve unique or difficult situations.

Bearing wall connections are divided into categories: those that support the bearing wall and floor or roof slabs, and those with (non-supported) edges of floor or roof slab running alongside them. These conditions are not the same as the connection of an architectural panel

to the structure like the others in this section. They are included because they often occur in loadbearing wall panel systems. Many of the tieback, shear plate, and panel-to-panel alignment connections in Figs. 4.5.29 to 4.5.45 could be used in bearing walls.

Bearing wall to foundation connections and the direct bearing connections in Figs. 4.5.15 to 4.5.19 are primarily intended to transfer their gravity loads to the panel below or to the foundation, although they can usually carry lateral loads, as well. The connections should provide a means of leveling and aligning the panel. The attachment method should be capable of accepting the base shear in any direction. In cases where an interior core carries lateral loads, this may be accomplished with a simple welded connection.

Slab to bearing wall connections are used to join precast or cast-in-place concrete floor or roof members to precast concrete bearing walls. They transfer any vertical load from the horizontal system and, sometimes, diaphragm action and on rare occasions provide moment resistance.

Blockouts in wall panels or spandrels as in Figs. 4.5.75(e), 4.5.75(f), and 4.5.76 decrease eccentricity and bending in the wall panel. Using blockouts in a spandrel would reduce the torsion stresses and twist during erection. If discontinuous pockets are used, they require substantial draft on their sides ($^1/_2$ in. [13 mm] every 6 in. [150 mm] depth to allow blockout stripping) and should have at least $2^1/_2$ in. (63 mm) cover to the exposed face. More cover (3 in. [75 mm] minimum) is required if the exterior surface has an architectural finish. In the case of a fine textured finish, there may be a light appearing area (the approximate size of the blockout) that shows on the face of the panel due to differential drying. This may be quite noticeable, despite the uniformity of the finish. The initial cure of the 2 $^1/_2$ to 3 in. (63 to 75 mm) of concrete versus 8 to 9 in. (200 to 225 mm) in the surrounding area will make the difference.

When the slab functions as a diaphragm, the connections must transmit diaphragm shear and chord forces to a structural core, thus reducing the load on individual exterior walls or spandrel units and their connections. When the slab-to-wall connection is accomplished with composite topping, temporary connections or bracing may be necessary during erection.

Most designs result in some degree of fixity for these connections. However, a fully fixed connection is generally not desirable. The degree of fixity can be controlled by a judicious use of bearing pads or weld plates.

Slab-to-side wall connections along the (non-bearing) sides of floor or roof slabs may be required to transmit lateral (diaphragm) loads and should either allow some vertical movement to accommodate camber and deflection changes in the floor units, or be designed to develop forces induced by restraining the units.

Wall-to-wall connections are primarily intended to position and secure the walls, although with proper design and construction, they are capable of carrying lateral loads from shear walls or frame action as well. The two locations of wall-to-wall connections are horizontal joints (usually in combination with floor construction) and vertical joints.

The most practical connection is one that allows realistic tolerances and ensures immediate transfer of load between panels.

Fig. 4.5.15 Direct bearing (DB1).

- Lateral restraint not provided
- Has large tolerance
- Finish joint with drypack or sealant

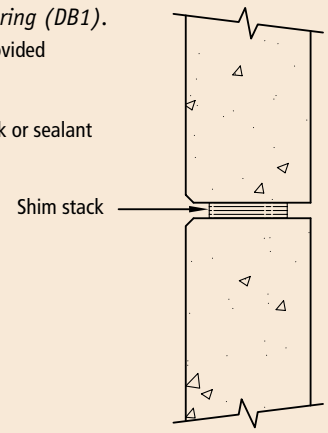

Fig. 4.5.16 Direct bearing (DB2).

- Insert must be jigged plumb
- Allows vertical adjustment without crane
- Finish joint with drypack or sealant
- Bolt head may be welded for tensile or shear capacity
- Plate may be eliminated, but adjustment becomes more difficult
- May be inverted with insert below.

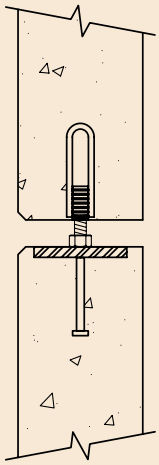

Fig. 4.5.17 Direct bearing (DB3).

- Reasonable tolerance
- Provides lateral restraint
- Realignment not possible after connection complete
- Requires shims until grouting or drypacking is done
- Cold weather may be a problem with grouting or drypacking
- Grout could be injected through tubes, allowing more time for alignment
- Void may be formed or field drilled
- Finish joint with drypack or sealant

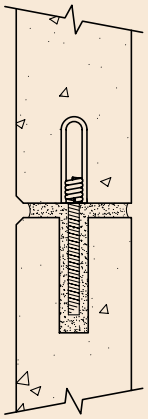

Fig. 4.5.18 Direct bearing (DB4).

- Reasonable tolerance
- Provides lateral restraint
- Realignment not possible after connection complete
- Requires shims until grouting or drypacking is done
- Cold weather may be a problem with grouting or drypacking
- Grout could be injected through tubes, allowing more time for alignment
- Upper void difficult to fill
- Upper void could be continuous or intermittent
- Finish joint with drypack or sealant

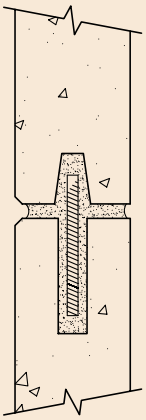

Fig. 4.5.19 Direct bearing (DB5).

- Full strength of bar can be achieved with proprietary grouted sleeve
- Small tolerance requires jigging
- Requires shims until grouting or drypacking is done
- Joint may be drypacked or grouted at same time as sleeve
- Smooth or corrugated sleeve could replace proprietary sleeve for lower capacity
- Finish joint with drypack or sealant
- Sleeve can be in either panel

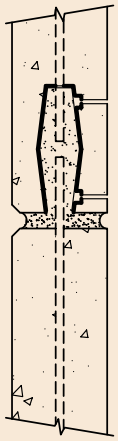

Fig. 4.5.20 Direct bearing (DB6).

- For shaped panels: can eliminate dead load overturn if shims in line with panel center of gravity
- Complex forming, especially if location of haunch changes
- Forming simplified if a bolt-on steel haunch is used

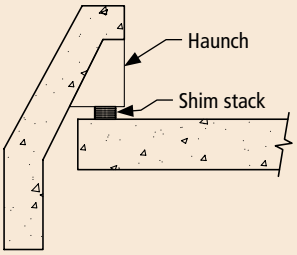

Fig. 4.5.21 Direct bearing (DB7).

- Preferable if column bearing bracket shown on contract drawings and shop-installed
- Cost substantially more if bracket field-installed, which also requires field layout
- Leveling bolt could be used in lieu of shims
- Can be used in pocket farther up panel away from joint

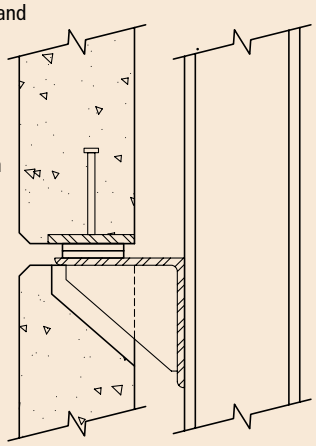

Fig. 4.5.22 Direct bearing (DB8).

- Lateral restraint could be provided by welding bolt head to seat
- Could use threaded insert in lieu of angle assembly

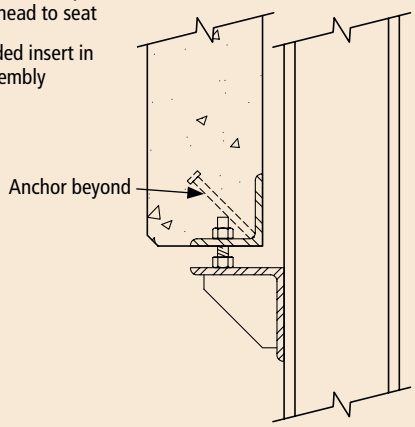

Fig. 4.5.23 Eccentric bearing (EB1).

- Coordinate with GC for placement of seat
- Could use leveling bolt or shims
- Could use thicker angle and delete gusset
- Could eliminate projection from panel by attaching angle with inserts or welding to flush plate

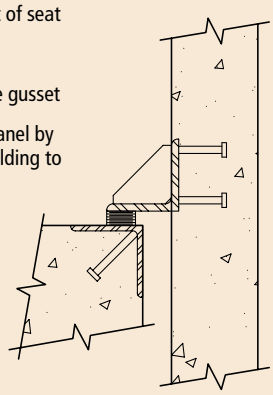

Fig. 4.5.24 Eccentric bearing (EB2).

- Coordinate with GC for placement of seat
- Complex haunch reinforcement
- Complex forming, especially if location of haunch changes
- Haunch could be cast first and set in form
- Haunch could be intermittent or continuous
- Plate washer may require welding for lateral loads

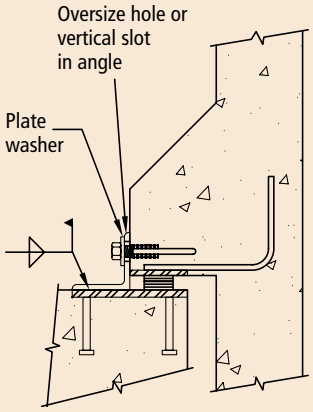

Fig. 4.5.25 Eccentric bearing (EB3).

- Keep bearing at center of beam to avoid torsion
- Leveling bolt saves time
- Could use shims in lieu of leveling bolt
- May require blockout in floor slab
- Different tieback could be used in lieu of shear plate

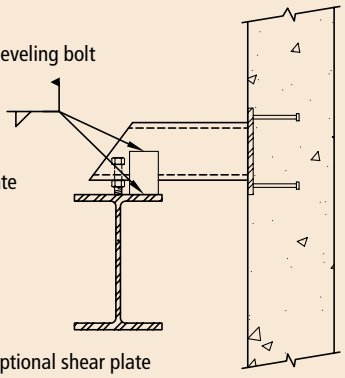

Shown with optional shear plate

Fig. 4.5.26 Eccentric bearing (EB4).

- Coordinate with GC for placement of seat
- Any structural shape could be used for projecting bracket—if unsymmetrical, consider torsion
- Many types of panel bracket anchorage could be used

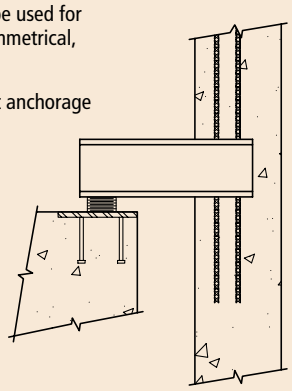

Fig. 4.5.27 Eccentric bearing (EB5).

- Same panel bracket can be used with any column size
- Any structural shape could be used for projecting bracket
- Many types of panel bracket anchorage could be used

Any of the members shown could be other structural shapes.

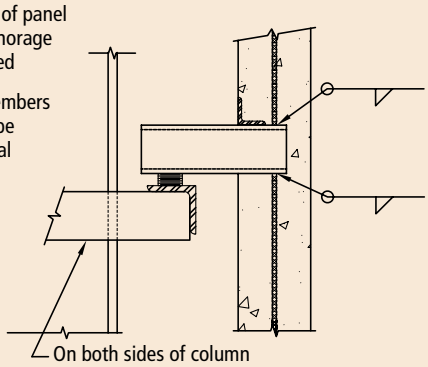

Fig. 4.5.28 Eccentric bearing (EB6).

- Same panel bracket can be used with any column size
- Thin tube may require reinforcing plate at bearing

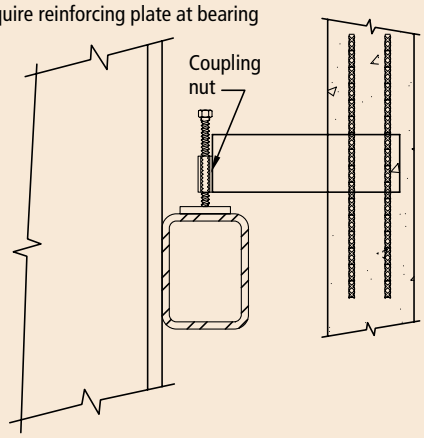

Fig. 4.5.29 Welded tieback (WTB1).

- Consider beam deflection
- Stagger anchor studs to minimize magnification of force on them due to variation of shear plate location
- Requires bracing until welded
- May also serve as shear plate

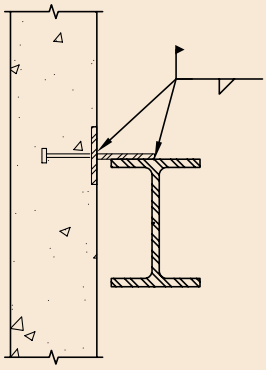

Fig. 4.5.30 Welded tieback (WTB2).

- Requires bracing until welded
- Alignment and welding must be done before upper panel is erected
- Difficult to inspect
- May also serve as shear plate

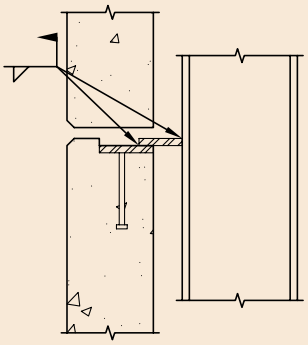

Fig. 4.5.31 Welded tieback (WTB3).

- Buckling of rod must be considered if compression load is expected
- Requires bracing until welded
- Do not over-tighten threaded rod if movement in slotted insert to be allowed
- Slotted bar may be used to fit proprietary slotted embedment

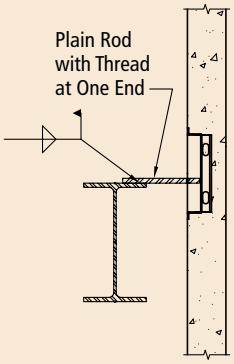

Fig. 4.5.32 Welded tieback (WTB4).

- Consider deflection of support
- Slots and bolts allow fast erection—weld after alignment

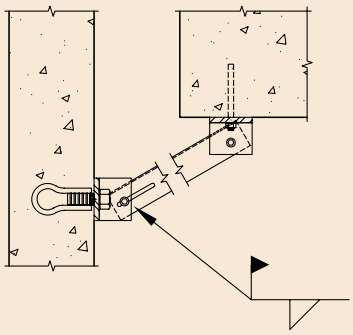

Fig. 4.5.33 Welded tieback (WTB5).

- Consider deflection of support
- Slots and bolts allow fast erection—weld after alignment

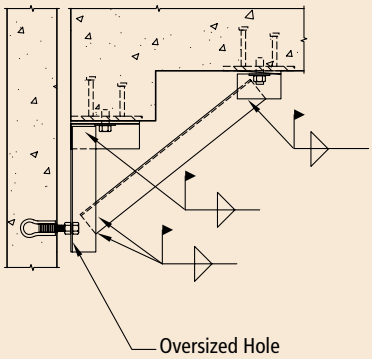

Fig. 4.5.34 Welded tieback (WTB6).

- Coordinate with GC for placement of insert
- Adjustment limited by thread length of insert and bolt
- Need adequate clearance for welding
- Weld not required for compression only
- Could reverse with plate in structure, and insert in panel

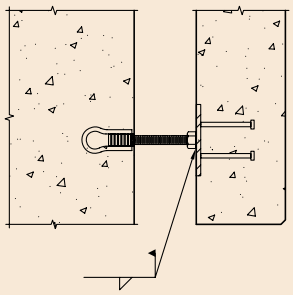

Fig. 4.5.35 Welded tieback (WTB7).

- Anchorage of plate and angle could vary
- Shear plate configuration to be determined by load type

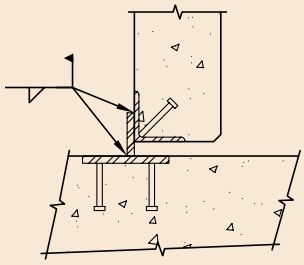

Fig. 4.5.36 Welded tieback(WTB8).

- Oversize hole in angle
- Plate washer could be welded and slotted to control directional movement See Fig. 4.5.14 for reference

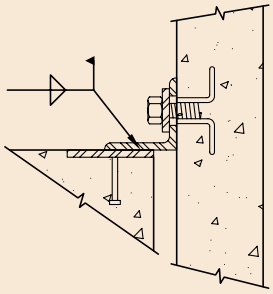

Fig. 4.5.37 Bolted tieback (BTB1).

- High-strength rod is advantageous
- Rod flexes for in-plane movement
- Bucking of rod must be considered if compression load is expected
- Oversize hole primarily for tolerance

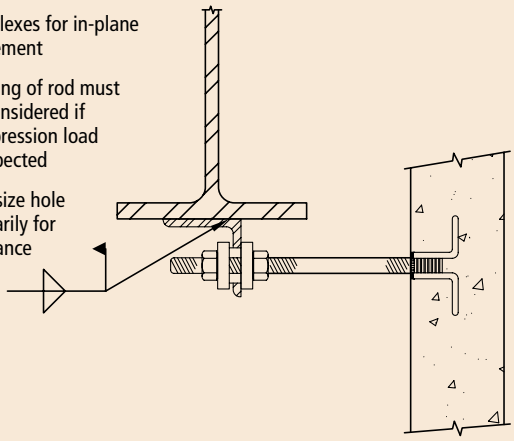

Fig. 4.5.39 Bolted tieback (BTB2).

- Alignment can be completed after release from crane
- Slots in embedment and angle to be perpendicular to each other for three-way adjustment
- Threaded insert can be used if angle has oversize hole and plate washers

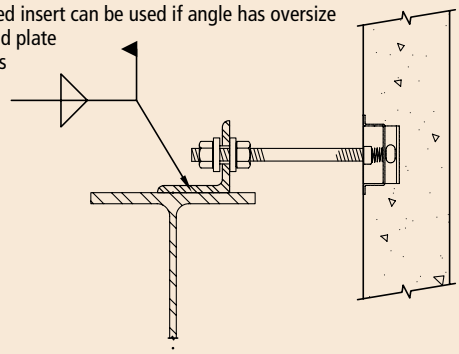

Fig. 4.5.39 Bolted tieback (BTB3).

- Horseshoe shims allow adjustment perpendicular to panel
- Oversize hole and plate washer allows adjustment parallel to panel
- Do not over-tighten bolt if movement to be allowed
- Plate washer could be welded and slotted to control directional movement. See Fig. 4.5.14

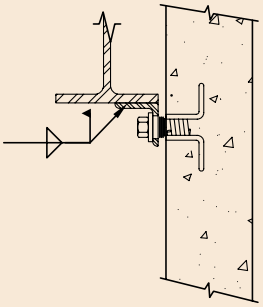

Fig. 4.5.40 Bolted tieback (BTB4).

- Coordinate with GC for placement if insert is used
- Edge distance and reinforcing in floor/foundation must be considered
- Angle has slotted holes

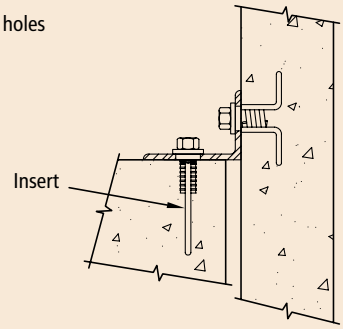

Fig. 4.5.41 Bolted tieback (BTB5).

- Basically an alternate to BTB1 where long rod cannot be accommodated
- Oversize hole both for tolerance and movement allowance
- Tieback rod receiver could be many configurations

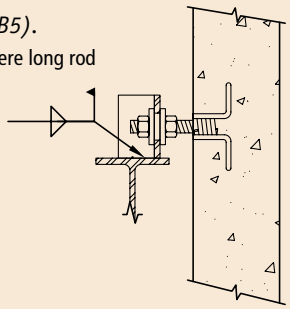

Fig. 4.5.42 Bolted tieback (BTB6).

- Sleeve in concrete column or wall must be large enough for adjustment
- Bearing pad need not be adjacent to tieback rod
- Special care required to maintain tolerance

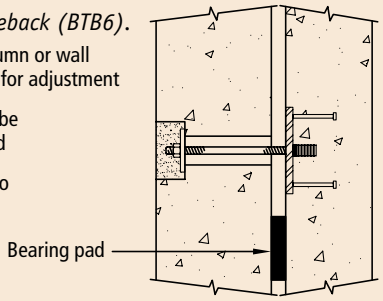

Fig. 4.5.43 Bolted tieback (BTB7).

- May require bracing until floor is cast

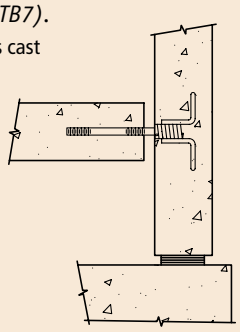

Fig. 4.5.44 Bolted tieback (BTB8).

- Blind connection
- Panel face does not need patching
- Large opening required for access
- If angle is field welded, smaller access hole allowed, but temporary bracing required
- Field tolerances critical

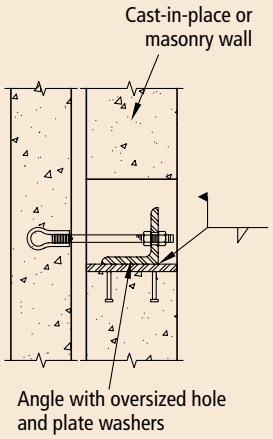

Fig. 4.5.45 Shear plate (SP1).

- Primarily for in-plane lateral force
- Also takes out-of-plane force
- Normally one used near center of panel, with larger panel to beam dimension, so force needn't be restricted by long panel brackets
- Trapezoidal plate may be assumed fixed at beam and pinned at panel to minimize panel plate anchorage
- Installed after panel fully aligned, so temporary tieback may be required
- Thin plate allows some vertical movement

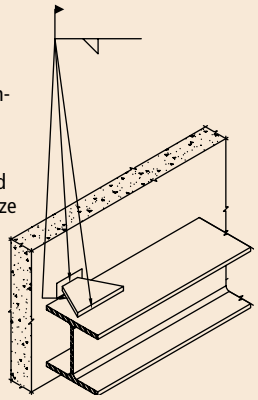

Fig. 4.5.46 Shear plate (SP2).

- Similar to SP1 except combined on bearing connector anchor plate
- Eliminates need for shear plate on bearing bracket
- Panel plate anchorage requirement is lower than if in-plane force were resisted by bracket

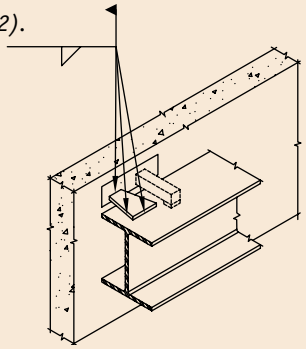

Fig. 4.5.47 Shear plate (SP3).

- Convenient at mid-height of column covers
- Can be used for rocking or translating unit, depending on balance of connection system
- Use in pairs or weld to column

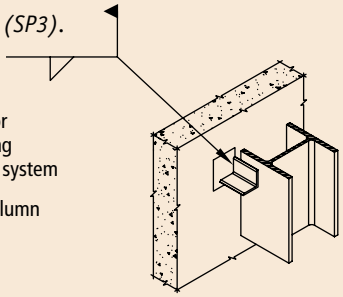

Fig. 4.5.48 Shear plate (SP4).

- Shims carry full weight of panel
- Shims should be adjacent to shear plate (angle)
- Angle orientation gives high capacity in all three axes
- Cannot be installed until after alignment, so temporary tieback may be required
- If leveling bolt were recessed into sill for ease of alignment, patching might be required

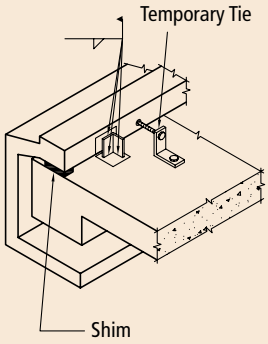

Fig. 4.5.49 Shear plate (SP5).

Shown at bearing bracket

- A few of the variety of shear plates used at bearing connectors
- Shape and location of plate or angle tailored to suit conditions and forces to be resisted

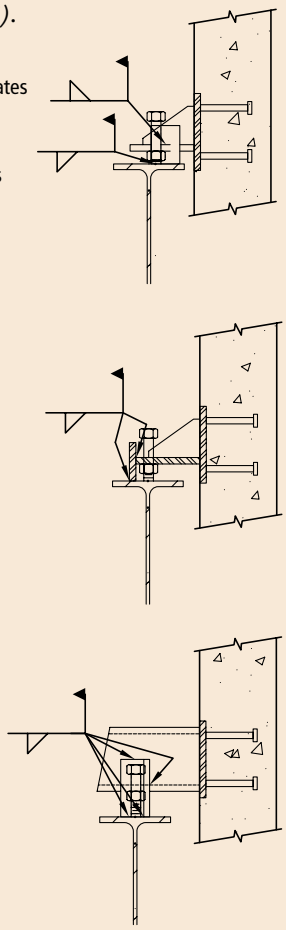

Fig. 4.5.50 Shear plate (SP6).

- Common at foundations
- May be flush or recessed
- Shape and location of plates or angles vary to suit conditions and forces to be resisted

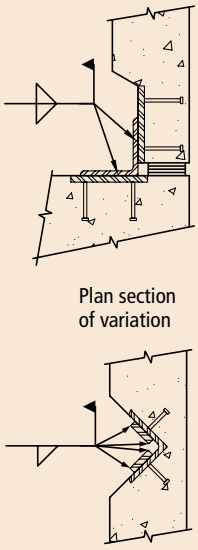

Plan section of variation

Fig. 4.5.51 Shear plate (SP7).

- (a) and (b) are sections at horizontal joint. For vertical joint, modify to eliminate overhead weld.
- (c) is section at vertical joint
- May be flush or recessed
- Shape and location of plates or angles vary to suit conditions and forces to be resisted
- Can also resist uplift

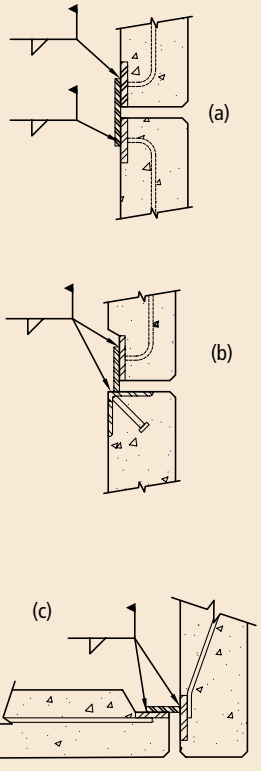

Fig. 4.5.52 Panel to panel alignment (PPA1).

- Not intended for required out-of-plane force resistance, but can be adapted to serve as tieback, as in Fig. 4.5.68
- Dimension to face of panel is critical
- Good solution when slightly bowed panels are not accessible after erection
- If panels are accessible after erection, finger plates can be field welded and shimmed if necessary

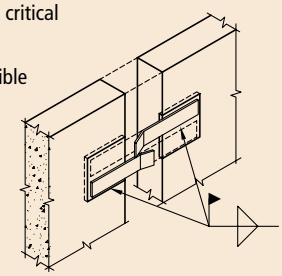

Fig. 4.5.53 Panel to panel alignment (PPA2).

- Not intended for required out-of-plane force resistance, but can be adapted to serve as tieback
- Shim thin panel if necessary

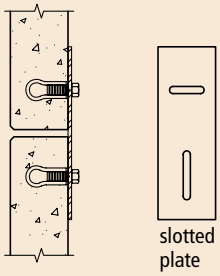

Fig. 4.5.54 Panel to panel alignment (PPA3).

- Not intended for required out-of-plane force resistance, but can be adapted to serve as tieback
- Panels must be aligned before welding
- Option (a) requires vertical weld, inside narrow joint
- Option (b) allows downhand weld, inside narrow joint

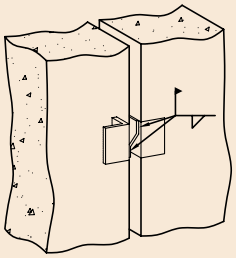

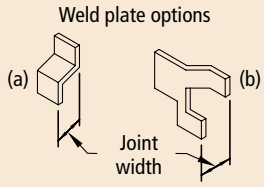

Fig. 4.5.55 Panel to panel alignment (PPA4).

- Not intended for required out-of-plane force resistance
- A few of the variety of alignment connectors
- Shape and location of embeds and loose slugs tailored to suit conditions

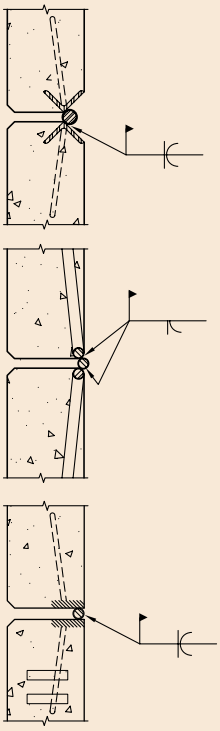

Fig. 4.5.56 Column cover (CC1).

- Serves as tieback
- Length and diameter of rod may limit capacity
- First element of column cover must be aligned prior to placing second
- Could be used for both halves if located at top
- Placement and coverage of insert is difficult in thin sections
- Shown in conjunction with Fig. 4.5.57

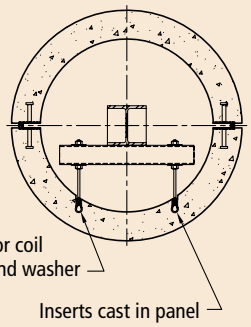

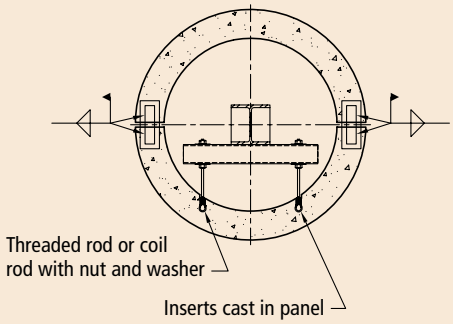

Fig. 4.5.57 Column cover (CC2).

- Use where access is limited
- Exercise caution to prevent weld stain and cracking from excess heat
- Minimum recommended joint size is 3/4 in. (19mm)

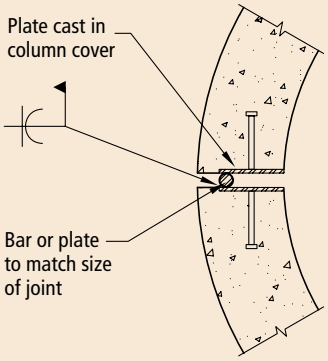

Fig. 4.5.58 Column cover (CC3).

- Serves as tieback
- Used only at top for welding access
- Could be changed to bolted

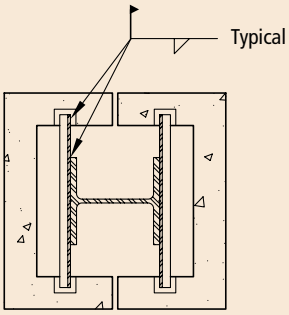

Fig. 4.5.59 Column cover (CC4).

- Can be both a loadbearing and tieback connector
- Lower panel must be aligned and welded prior to placing upper portion
- Good with limited access
- Could modify to insert and bolt if ample space

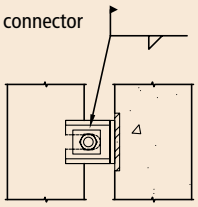

Plan View

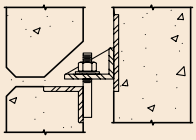

Section View

Fig. 4.5.60 Column cover (CC5).

- Top connector
- Align with tieback rods prior to welding angle

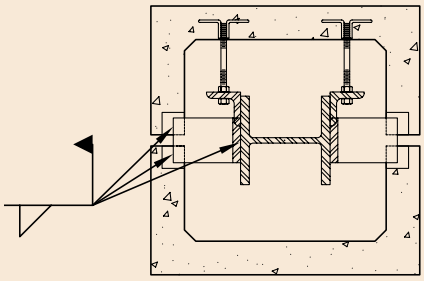

Plan View

Fig. 4.5.61 Column cover (CC6).

- Bottom connector
- Support unit on shims
- Joint width sets thickness of vertical plate on knife assembly
- Align and weld first unit prior to setting second
- Welding of second half difficult in narrow joint
- Allows units to rock if bent plate (or angle) legs long enough

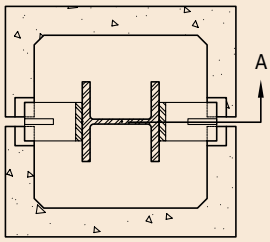

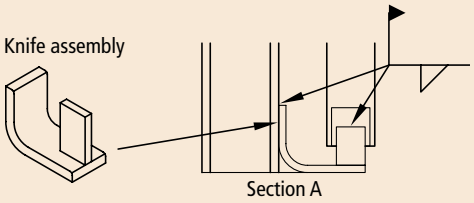

Fig. 4.5.62 Beam cover (BC1).

- Erection sequence critical
- Beam must be adequate to prevent excessive rotation when first element is placed
- Top right connector (alternate) requires tight tolerance
- Sealant at top left connector (alternate) is critical
- May require combination of grouting, bolting, and welding
- Preferably, use one type of alternate top connector
- Joint locations optional

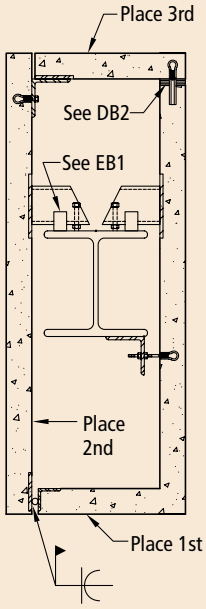

Fig. 4.5.63 Soffit hanger (SH1).

- Allows alignment after in place
- May require separate tiebacks for lateral forces
- Access for bolting may be difficult

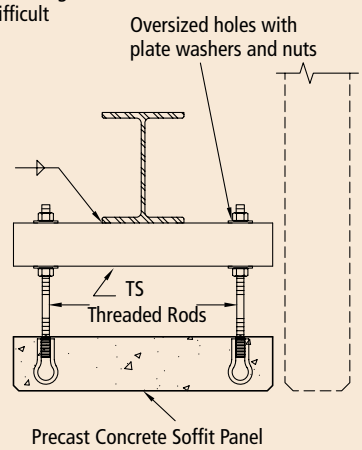

Fig. 4.5.64 Special conditions (SC1).

Oversize hole considerations

(a) Bolt subject to bending

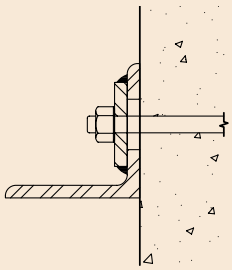

(b) Loose plate under angle, welded after adjustment eliminates bending in bolt

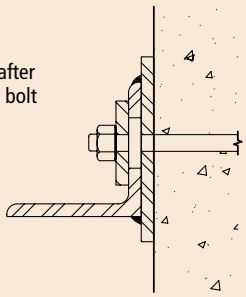

Fig. 4.5.65 Special conditions (SC2).

Concrete Anchors

(a) National Coarse or coil thread loop insert

(b) National Coarse or coil thread wing nut

(c) National Coarse or coil thread coupling nut and bolt

(d) National Coarse or coil thread coupling nut, plate, and studs

(e) Projecting National Coarse or coil bolt

(f) Flush plate with studs or hand welded bolt blanks

(g) Bearing lug and/or tension bar supplement on flush plate with studs or hand-welded bolt blanks

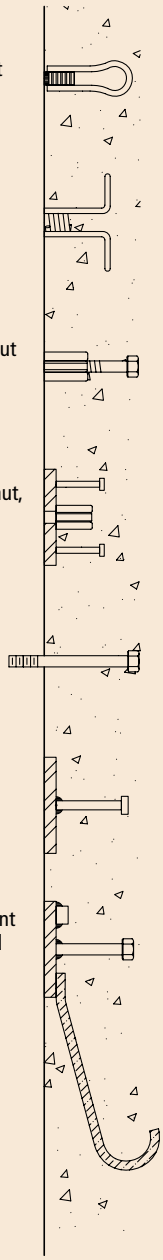

(h) Proprietary threaded embedment. Available with one- or two-way adjustability.

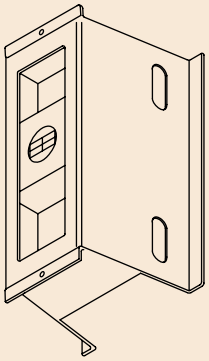

Fig. 4.5.66 Special conditions (SC3).

Special tiebacks

(a) Double pivots allow for extreme drift

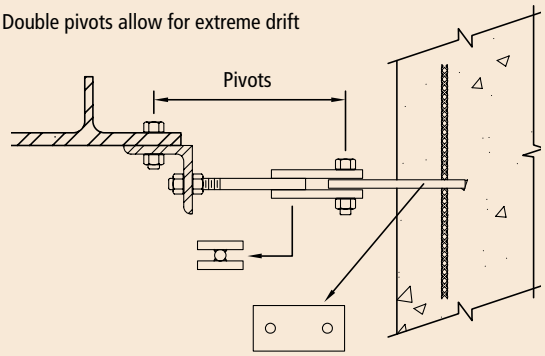

(b) Sleeve eliminates possibility of binding when oversize hole provides for drift

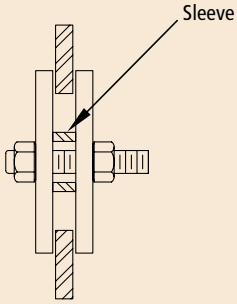

(c) Small diameter tieback rods desired for flexing can be prevented from buckling in compression with loose pipe sleeve

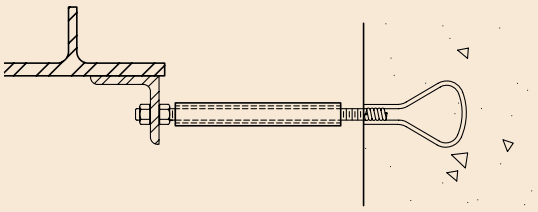

Fig. 4.5.67 Special conditions (SC4).

Special shear plates that allow lift-off for rocking

(a) Use in pairs. Allows movement perpendicular to panel

(b) Use in pairs. Round bars shop welded to bearing bracket.

(c) Use in pairs. Round bar shop welded to bearing bracket.

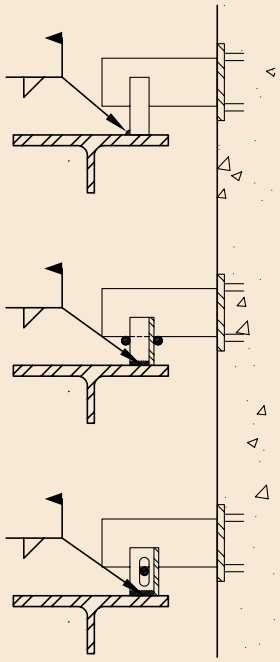

Fig. 4.5.68 Special conditions (SC5).

- Figure 4.5.52 can be supplemented to become a tieback
- Lower panel with insert and bolt must be aligned and welded prior to placing upper panel
- Limited bolt head weld length could be mitigated by shop welding a plate to it

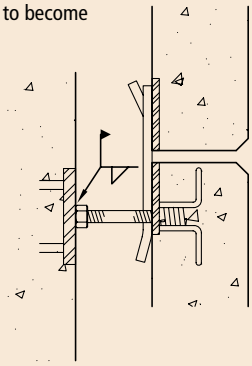

Fig. 4.5.69 Special conditions (SC6).

Anchor load control shown at bearing bracket.

- Upper bolts carry shear
- Lower bolts carry tension

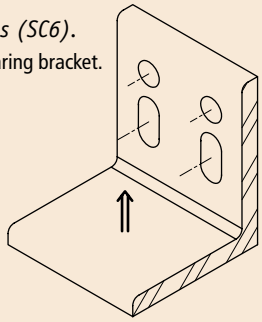

Fig. 4.5.70 Bearing wall to foundation (BWF1).

- Can be designed for shear and uplift
- Could develop moment resistance by placing a connection on each side of wall
- Shim prior to drypack

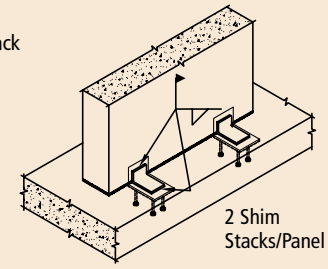

Variations

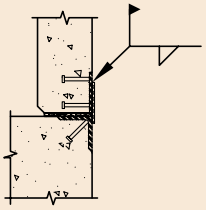

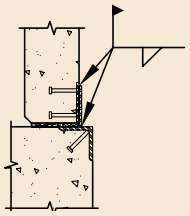

Fig. 4.5.71 Bearing wall to foundation (BWF2).

- Insert must be jigged plumb
- Allows vertical adjustment without crane
- Finish joint with drypack or sealant
- Bolt head may be welded for tensile or shear capacity
- Plate may be eliminated, but adjustment becomes more difficult
- May be inverted with insert below

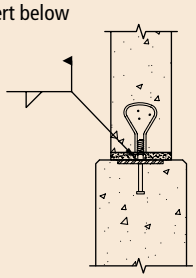

Fig. 4.5.72 Bearing wall to foundation (BWF3).

- Has shear, uplift, and moment capacity
- Location and alignment of dowels critical
- Capacity can be increased with confinement reinforcing
- Dowels projecting from panel create storing and shipping problems
- Requires bracing until grouted
- Grouting could be done after alignment if injection tube used
- Could be inverted with sleeve and injection tube in panel

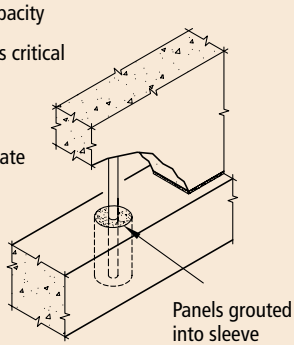

Fig. 4.5.73 Bearing wall to foundation (BWF4).

- Can be designed for shear, uplift, and nominal moment capacity
- Requires bracing until welded

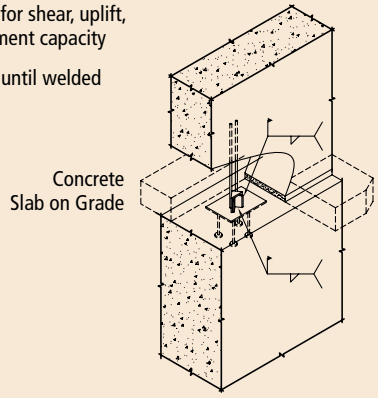

Fig. 4.5.74 Bearing wall to foundation (BWF5).

- Bar could be prestressed or mild steel
- Substantial shear, uplift, and moment capacity
- Tolerance for placement of bars and sleeves critical
- May require grout tubes and vents
- Preferably grout from bottom to eliminate voids
- Bracing required until drypacked and grouted
- Void in foundation at bar essential for field alignment
- Foundation void can be formed with EPS (expanded polystyrene) or foam pipe insulation

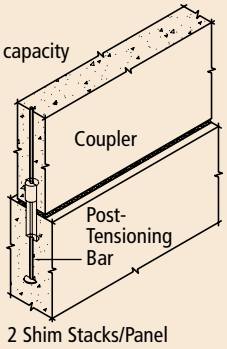

Fig. 4.5.75 Slab to bearing wall (SBW1).

- Welding at bottom of tee or slab is NOT recommended as excessive restraint results
- Load is eccentric to wall panel
- Top connection for shear can provide some torsional restraint of spandrel
- Corbel requires special forming
- Could replace corbel with inverted EB type assembly
- Variations (d) through (g) could be used either in topping or hollow-core joints

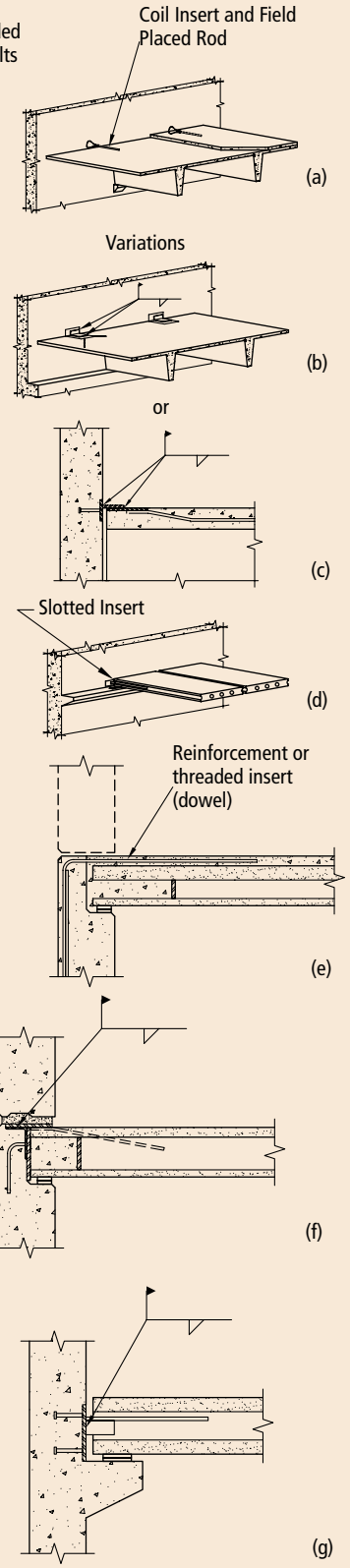

Fig. 4.5.76 Slab to bearing wall (SBW2).

- Pocket and tee end must be planned so slab can be swung into place
- CANNOT be used at both ends of slab
- Consider volume change shortening of slab
- Pocket may telegraph through and show on outside of wall
- DO NOT drypack pocket so it restricts tee stem
- If slab at top of wall, as in (b), pockets could be replaced with continuous dap

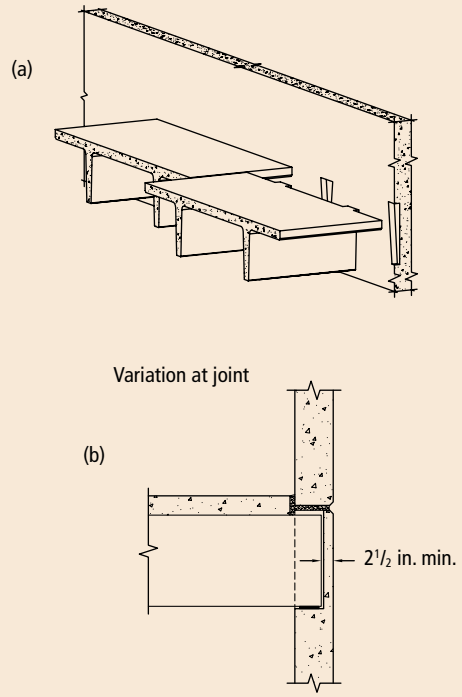

Fig. 4.5.77 Slab to bearing wall (SBW3).

- DO NOT use at both ends of slab to prevent excessive restraint
- Develops a rigid moment connection
- Effect of moment, rotation, and volume changes in wall and slab must be considered
- Welding must be completed before placing upper panel
- Avoid overhead welding if possible
- Could use wall corbel in lieu of angle seat

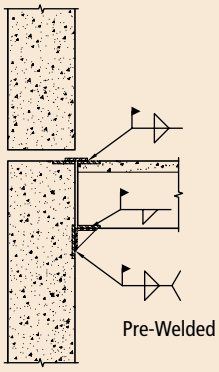

Fig. 4.5.78 Slab to side wall (SSW1).

- Allows for slab deflection
- Transfers horizontal forces
- Do not over tighten bolt in (a)
- Proprietary or fabricated slot embedment in (b)
- Vertical movement accommodated by flexing plate and welds in (c)
- Vertical movement accommodated by flexing tee flange in (d)
- (c) and (d) could be underneath, for less roofing interference, but field labor would be more expensive

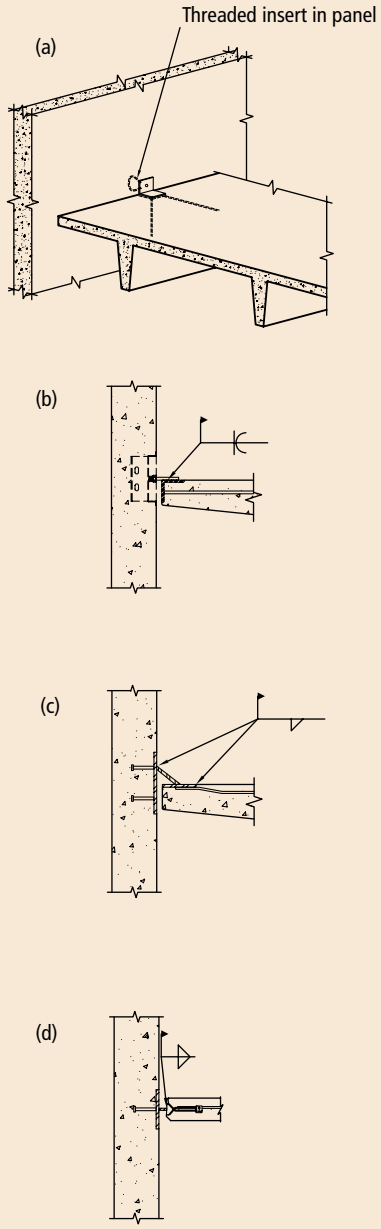

Fig. 4.5.79 Wall to wall (WW1).

- Can be used to withstand uplift forces
- Connection is hidden and protected
- Connection is not developed until tensioning is completed (bars are anchored)
- Temporary bracing is required
- Drypack, tensioning, grouting sequence may limit erection to one story at a time
- Grouting requires care to ensure complete filling

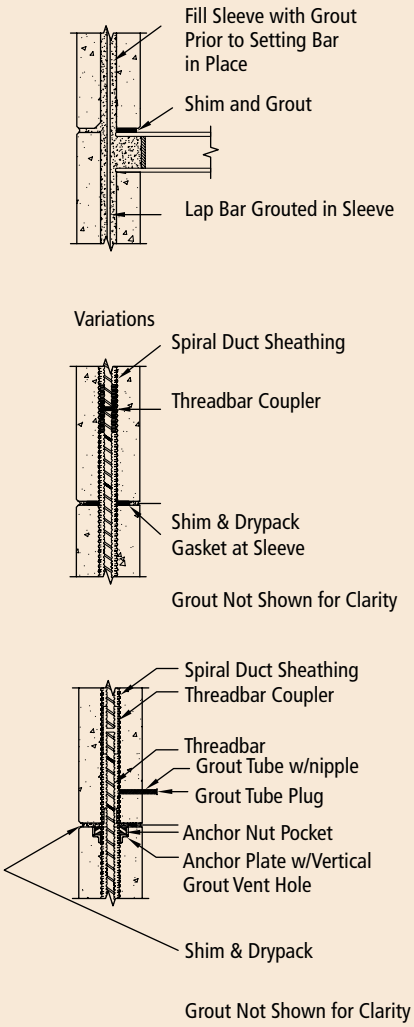

4.6 TOLERANCES

4.6.1 General

Designers must recognize that manufacturing and erection tolerances apply to precast concrete just as they do to other building materials. Tolerance is defined as a permissible variation from a specified dimension. A tolerance can be expressed as an additive (+) or subtractive (-) variation from a specified dimension or relation or as an absolute deviation from a specified relation. Tolerances define realistic limits for size and shape within which the precast concrete units must lie, and must satisfy the designer's intent while ensuring the constructability and economy of the building system.

Three groups of tolerances should be established as part of the precast concrete design: product tolerances, erection tolerances, and interfacing tolerances.

Tolerances are established for the following reasons:

1. **Structural**—To ensure that structural design accounts for variations in dimensional control. Examples include eccentric loading conditions, bearing locations, hardware anchorage locations, and locations of reinforcing or prestressing steel.
2. **Feasibility**—To ensure acceptable performance of joints and interfacing materials, such as glazing between panels, and to ensure that designs and details are dimensionally feasible.
3. **Visual**—To ensure that the variations will result in an aesthetically acceptable structure.
4. **Economic**—To ensure ease and speed of production and erection with a known degree of accuracy in the dimensions of the precast concrete product.
5. **Contractual**—To establish a known acceptability range and to establish responsibility for developing, achieving, and maintaining mutually agreed tolerances.
6. **Legal**—To avoid encroaching on property lines and to establish tolerance standards against which the work can be compared in the event of a dispute.

Tolerances and interface conditions are best handled by the design team, GC, or other entity having the contractual authority necessary to specify, coordinate, and control interfacing requirements of other trades that adjoin the precast concrete construction.

While the responsibility for specifying and maintaining tolerances of the various elements may vary among projects, it is important that this responsibility be clearly assigned. The tolerances must be reasonable, realistic, and within generally accepted limits. Some manufacturing and erection costs are directly proportional to the tolerance requirements. It is more economical to design connection and interace details with maximum flexibility and to keep tolerance requirements as realistic as possible.

Whenever possible, it is preferred that product and erection tolerance be specified in accordance with PCI-recommended values. PCI has published a comprehensive guide to tolerances in *Tolerance Manual for Precast and Prestressed Concrete Construction*, MNL 135.

It should be understood by those involved in the design and construction process that the listed tolerances in this manual must be considered as guidelines for an acceptability range and not limits for rejection. If specified tolerances are met, the members should be accepted. If these tolerances are exceeded, the member may still be acceptable if it meets any of the following criteria:

1. Exceeding the tolerances does not affect the structural integrity, architectural performance of the member, or other trades.
2. The member can be brought within tolerance by structurally and architecturally satisfactory means.
3. The total erected assembly can be modified reasonably to meet all structural and architectural requirements.

The enforcement of tolerances should be based on the technical judgment of the designer. This design professional is able to decide whether a deviation from the allowable tolerances affects safety, appearance, or other trades. In building construction, very little out of tolerance work, whether it is concrete, masonry, cast-in-place concrete, steel, or precast concrete, has been rejected and removed solely because it was "out-of-tolerance."

4.6.2 Product Tolerances

Product tolerances relate to the dimensions and dimensional relationships of the individual precast concrete units. They are a measure of the dimensional accuracy required on individual members to ensure, prior to delivery, that the members will fit the structure without requiring tolerance related rework. Product

tolerances are applied to physical dimensions of units such as thickness, length, width, squareness, and location and size of openings. They are determined by economical and practical production considerations, and functional and appearance requirements. Product tolerances also control the locations of the member features as they relate to the overall member dimensions.

The architect should specify product tolerances within generally accepted limits, as they relate to each individual project, or require performance within a generally accepted limit. The architect must account for the function of the member, its fit in the structure, and the compatibility of the member tolerances to those of the interfacing materials (see Section 4.6.4). Tolerances for manufacturing are standardized throughout the industry and should not be specified to more stringent, and therefore more costly, unless absolutely necessary. Areas that might require more exacting tolerances could include special finish or appearance requirements, glazing details, and certain critical dimensions on open shaped panels (see Sections 3.5, 5.2. and 3.3.1).

For example, a special appearance requirement may be necessary for honed or polished flat concrete walls where bowing or warping tolerances may have to be decreased to avoid joint shadows. Another special case might be tolerances for dimensions controlling the matching of open-shaped panels. These tolerances may have to be tighter than the standard dimensional tolerances to ensure a visually acceptable match-up, unless the architect has recognized and solved the alignment problem as part of the design.

When a project involves particular features sensitive to the cumulative effect of generally accepted tolerances on individual portions, the design team should anticipate and provide for this effect by setting a cumulative tolerance or by providing escape areas (clearances) where accumulated tolerances or production errors can be absorbed. The consequences of all tolerances permitted on a particular project should be investigated to determine whether a change is necessary in the design or in the tolerances applicable to the project or individual components. For example, there should be no possibility of minus tolerances accumulating so that the bearing length of members is reduced below the required design minimum. These bearing dimensions and their tolerances should be shown on the erection drawings.

The published allowable variation for one element of the structure should not be applicable when it will permit another element of the structure to exceed its allowable variations.

Restrictive tolerances should be reviewed to ascertain that they are compatible and that the restrictions can be met. For example, a requirement that states, "no bowing, warpage, or movement is permitted," is not practical or possible to achieve.

The product tolerances for architectural precast concrete panels have the following significance:

1. Length or width dimensions and straightness of the precast concrete will affect the joint dimensions, opening dimensions between panels, and possibly the overall length of the structure. Tolerances must relate to unit size and increase as unit dimensions increase.
2. Panels out-of-square can cause tapered joints and make adjustment of adjacent panels difficult.
3. Thickness variation of the precast concrete unit becomes critical when interior surfaces are exposed to view. A non-uniform thickness of adjacent panels will cause offsets of the front or the rear faces of the panels.

Industry product tolerances for architectural precast concrete panels are defined as follows:

Warping is generally the twisting of a member, resulting in an overall out-of-plane curvature in which the corners of the panel do not all fall within the same plane. Warping tolerances are stated in terms of the magnitude of the corner variation (Fig. 4.6.1). It is usually stated in terms of the allowable variation per 1 ft (0.3 m) of distance from the nearest adjacent corner with a not-to-exceed maximum value of corner warping.

Bowing is an overall out-of-plane curvature, which differs from warping in that while the corners of the panel may fall in the same plane, the portion of the panel between two parallel edges is out of plane. Several possible bowing conditions are shown in Fig. 4.6.2. Differential temperature effects, differential moisture absorption between the inside and outside faces of a panel, the effects of prestress eccentricity, and differential shrinkage between wythes in an insulated panel should be considered in design to minimize bowing and warping.

Fig. 4.6.1 Warping definitions for panels.

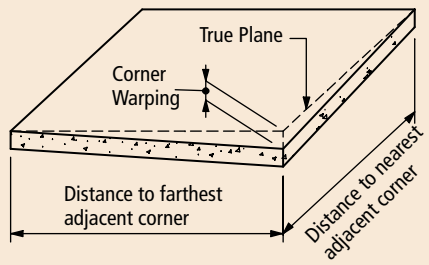

Fig. 4.6.2 Definition of bowing for panels.

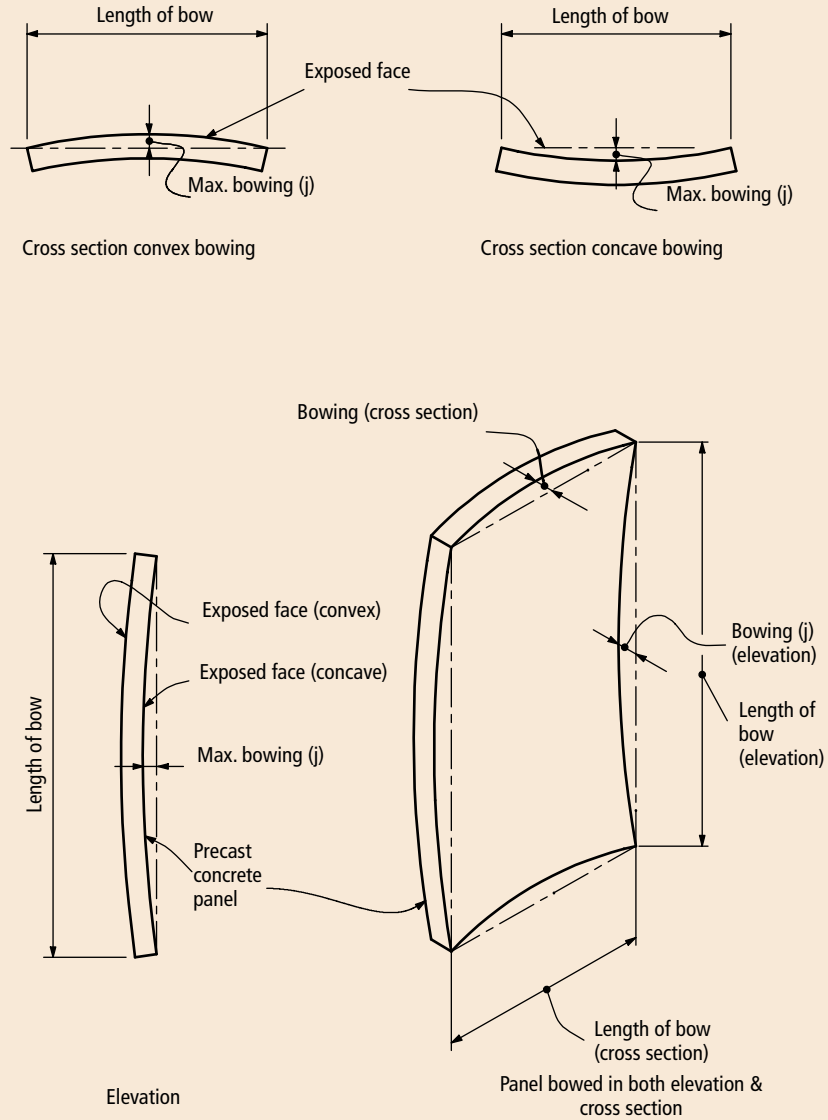

Fig. 4.6.3 Local smoothness variations.

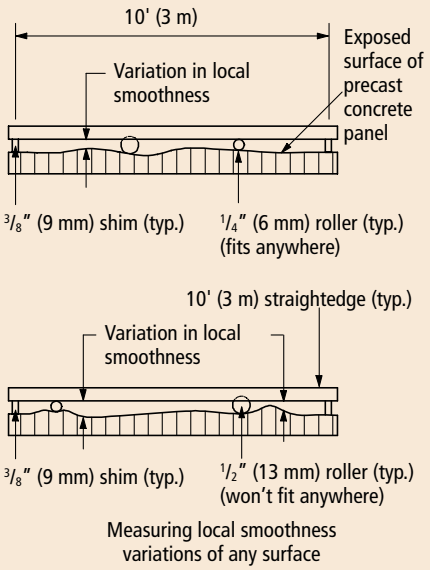

Bowing and warping tolerances are of interest primarily at the time the panel is erected. They have an important effect on the edge match-up during erection and on the visual appearance of the erected panels, both individually and when viewed together. The requirements for bowing and warping of panels may be overridden by erection tolerances for panels as installed with reference to joint widths, jog in alignment, and step-in face.

Tolerances for the planeness of concrete surfaces at the window or curtain wall face should be provided. Bowed or warped panels can make alignment of adjacent panels or materials difficult. Slender panels should not be automatically subjected to the standard tolerances for bowing and warping. Table 4.6.1 shows the relationship between overall flat panel dimensions and thickness. Anything below the suggested bowing and warping tolerances should be reviewed to determine if the dimensions should possibly be increased or a mid-point tieback used. Note that the thickness values in this table should not be considered as limiting values, but rather as an indication that more detailed consideration of the possible magnitude of warping and bowing is warranted. The major criteria for maintaining or relaxing bowing and warping tolerances will

Table 4.6.1. Guidelines for Panel Thickness for Overall Panel Stiffness Consistent with Suggested Normal Panel Bowing and Warping Tolerances.[1]

Panel Dimensions[2]	8 ft	10 ft	12 ft	16 ft	20 ft	24 ft	28 ft	32 ft
4 ft	4 in.	4 in.	4 in.	5 in.	5 in.	6 in.	6 in.	7 in.
6 ft	4 in.	4 in.	4 in.	5 in.	6 in.	6 in.	6 in.	7 in.
8 ft	4 in.	5 in.	5 in.	6 in.	6 in.	7 in.	7 in.	8 in.
10 ft	5 in.	5 in.	6 in.	6 in.	7 in.	7 in.	8 in.	8 in.

[1] This table should not be used for panel thickness selection.

[2] This table represents a relationship between overall flat panel dimensions and thickness below which suggested bowing and warping tolerances should be reviewed and possibly increased or a mid-point tieback used. For ribbed panels, the equivalent thickness should be the overall thickness of such ribs if continuous from one end of the panel to the other.

Note: 1 ft = 0.3048 m; 1 in. = 25.4 mm

be the appearance requirements, the required type of connections (as well as the number and location of tieback connection points), and the advice of the local precaster regarding overall economic and construction feasibility.

To reduce the possibility of panel warpage or bowing, consideration should be given to the panel length, shape, and connection locations. The longer the panel, the more difficult it is to control planeness of the panel. Bowing or warpage can be reduced by the use of multiple tieback connections.

For ribbed panels, the equivalent thickness used in Table 4.6.1 should be the overall thickness of the ribs, if they run continuous from one end of the panel to the other. Similarly, panels that are manufactured using large-aggregate concrete (above $^3/_4$ in. [19 mm] aggregate) or units that are fabricated from nonhomogeneous materials (such as two significantly different concrete mixtures, natural stone or clay product veneers, insulating mediums, and the like) also require more careful consideration of all aspects of fabrication, storage, and handling with regard to bowing and warping.

Surface out-of-planeness is defined as a local smoothness variation rather than a bowing of the entire panel shape. Examples of local smoothness variations are shown in Fig. 4.6.3. The tolerance for this type of variation is usually expressed in fractions of 1 in. per 10 ft (25mm per 3 m).

Figure 4.6.3 also shows how to determine if a surface meets a tolerance of $^1/_4$ in. per 10 ft (6 mm per 3 m). A $^1/_4$ in. (6 mm) diameter by 2-in.-long (50 mm) roller should fit anywhere between the 10-ft-long (3 m) straightedge and the element surface being measured when the straightedge is supported at its ends on $^3/_8$ in. (10 mm) shims as shown. A $^1/_2$ in. (13 mm) diameter by 2-in.-long (50 mm) roller should not fit between the surface and the straightedge.

Dimensional tolerance requirements for architectural precast concrete elements are given in Fig. 4.6.4, 4.6.5, 4.6.6, and 4.6.7. It must be emphasized that these are guidelines only and that each project must be considered individually to ensure that the staled tolerances are applicable.

Groups of inserts or cast-in items that must be located in close tolerance to each other should not be separated into two different panels by a joint.

4.6.3 Erection Tolerances

Erection tolerances control the position of the individual precast concrete members as they are located and placed in the assembled structure. They normally involve the GC and various subcontractors, such as the precast concrete erector.

Erection tolerances are provided to help achieve uniform joint widths, level floor elevations, and planar wall conditions. Erection tolerances should be determined on the basis of individual unit design, shape, thickness, composition of materials, and overall scale of the unit in relation to the building. The specified erection tolerances may affect the work of several different building trades and must be consistent with the tolerances specified for those trades.

Fig. 4.6.4 Architectural Wall Panels.

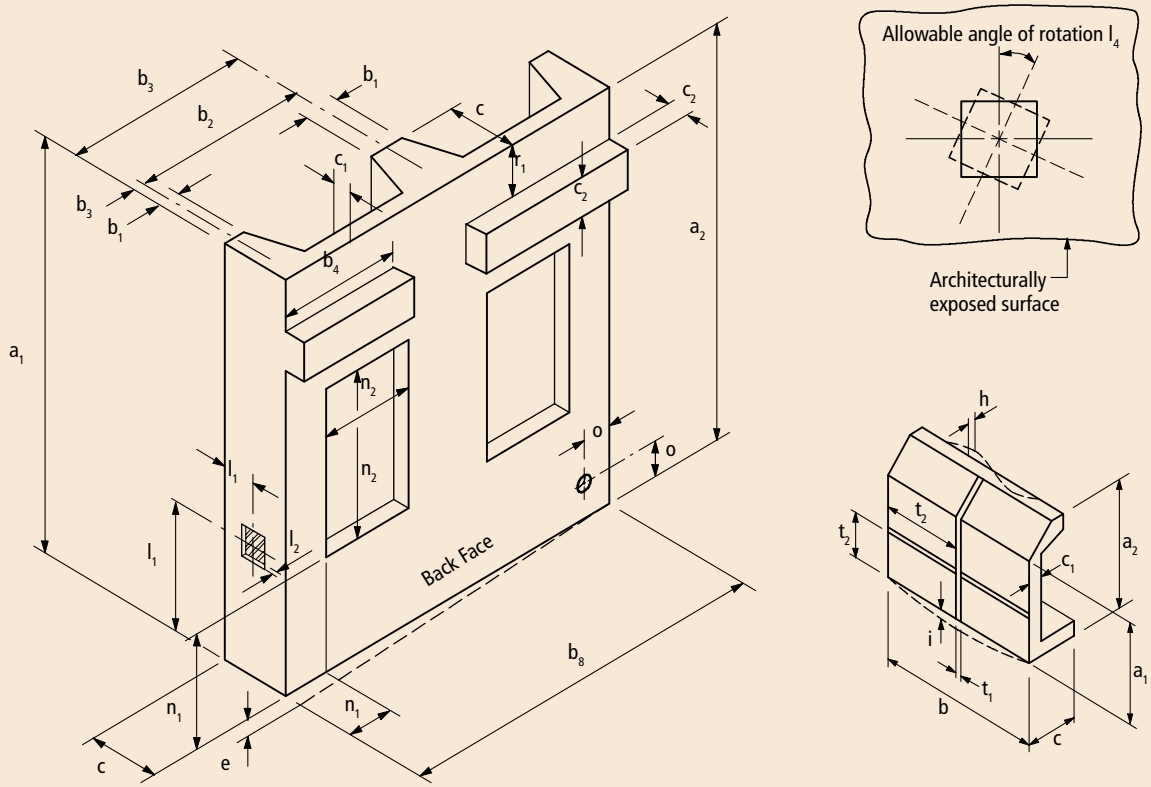

a_1 = Overall height of unit measured at the face exposed to view:
Up to 10 ft [3 m] ..... ± 1/8 in. [± 3 mm]
10 to 20 ft [3 to 6 m] ..... + 1/8 in., –3/16 in. [+ 3 mm, –5 mm]
20 to 40 ft [6 to 12 m] ..... ± 1/4 in. [± 6 mm]
Greater than 40 ft [12 m] ..... ± 1/16 in. per 10 ft [± 1.5 mm, per 3 m]

a_2 = Overall height of unit measured at the face not exposed to view:†
Up to 10 ft [3 m] ..... ± 1/4 in. [± 6 mm]
10 to 20 ft [3 to 6 m] ..... + 1/4 in., –3/8 in. [+ 6 mm, –10 mm]
20 to 40 ft [6 to 12 m] ..... ± 3/8 in. [± 10 mm]
Greater than 40 ft [12 m] ..... ± 1/8 in. per 10 ft [± 3 mm, per 3 m]

b = Overall width of unit measured at the face exposed to view:
Up to 10 ft [3 m] ..... ± 1/8 in. [± 3 mm]
10 to 20 ft [3 to 6 m] ..... + 1/8 in., –3/16 in. [+ 3 mm, –5 mm]
20 to 40 ft [6 to 12 m] ..... ± 1/4 in. [± 6 mm]
Greater than 40 ft [12 m] ..... ± 1/16 in. per 10 ft [± 1.5 mm per 3 m]

b_1 = Rib width ..... ± 1/8 in. [± 3 mm]

b_2 = Distance between ribs ..... ± 1/8 in. [± 3 mm]

b_3 = Rib to edge of flange ..... ± 1/8 in. [± 3 mm]

b_8 = Overall width of unit measured at the face not exposed to view:
Up to 10 ft [3 m] ..... ± 1/4 in. [± 6 mm]
10 to 20 ft [3 to 6 m] ..... + 1/4 in., –3/8 in. [+ 6 mm, –10 mm]
20 to 40 ft [6 to 12 m] ..... ± 3/8 in. [± 10 mm]
Greater than 40 ft [12 m] ..... ± 1/8 in. per 10 ft [± 3 mm per 3 m]

c = Total thickness ..... + 1/4 in., –1/8 in. [+ 6 mm, –3 mm]

c_1 = Flange thickness ..... + 1/4 in., –1/8 in. [+ 6 mm, –3 mm]

c_2 = Dimensions of haunches ..... ± 1/4 in. [± 6 mm]

e = Variation‡ from square or designated skew ..... ± 1/8 in. per 6 ft, ± 1/2 in. max. [± 3 mm per 2 m, ± 13 mm max.]

h = Location smoothness, unconcealed surfaces ..... ± 1/4 in. per 10 ft, [± 6 mm per 3 m]

i = Bowing ..... ± Length/360, to maximum of 1 in. [25 mm]

j = Warp (from adjacent corner) ..... 1/16 in. per ft [1.5 m per 300 mm]

l_1 = Location of weld plates ..... ± 1 in. [± 25 mm]

l_2 = Tipping and flushness of plates ..... ± 1/4 in. [± 6 mm]

l_4 = Allowable rotation of plate, channel insert, electrical box ..... 2 degrees
1/4 in. [6 mm] maximum measured at perimeter of insert

m_2 = Haunch bearing surface tipping and flushness of bearing plates ..... ± 1/8 in. [± 3 mm]

m_3 = Difference in relative position of adjacent haunch bearing surfaces from specified relative position ..... ± 1/4 in. [± 6 mm]

n_1 = Location of opening within panel ..... ± 1/4 in. [± 6 mm]

n_2 = Length and width of blockouts and openings within one unit ..... ± 1/4 in. [± 6 mm]

n_3 = Location and dimensions of blockouts hidden from view and used for HVAC and utility penetrations ..... ± 3/4 in. [± 19 mm]

o = Position of sleeve ..... ± 1/2 in. [± 13 mm]

p = Reinforcing steel extending out of member ..... ± 1/2 in. [± 13 mm]

q = Position of handling devices ..... ± 3 in. [± 75 mm]

r_1 = Location of bearing surface from end of member ..... ± 1/4 in. [± 6 mm]

s_1 = Reinforcing steel and welded wire reinforcement:
Where position has structural implications or affects concrete cover ..... ± 1/4 in. [± 6 mm]
Otherwise ..... ± 1/2 in. [± 13 mm]

s_3 = Position of insert ..... ± 1/2 in. [± 13 mm]

s_4 = Location of strand:
Perpendicular to panel ..... ± 1/4 in. [± 6 mm]
Parallel to panel ..... ± 1 in. [± 25 mm]

t_1 = Dimensions of architectural features and rustications ..... ± 1/8 in. [± 3 mm]

t_2 = Location of rustication joints ..... ± 1/8 in. [± 3 mm]

w_1 = Location of flashing reglets ..... ± 1/4 in. [± 6 mm]

w_2 = Location of flashing reglets at edge of panel ..... ± 1/8 in. [± 3 mm]

w_3 = Size of reglets for glazing gaskets ..... ± 1/8 in. [± 3 mm]

z = Electrical outlets, hose bibs, etc. ..... ± 1/2 in. [± 13 mm]

Tolerances below are for smooth-finished stone veneer-faced precast concrete panels.

1. Variations in cross-sectional dimensions: For thickness of walls from dimensions indicated..... .....1/4 in. (6 mm).
2. Variation in joint width: 1/8 in. in 36 in. (3 mm in 900 mm) or a quarter of nominal joint width, whichever is less.
3. Variation in plane between adjacent stone units (lipping): 1/16 in. (1.5 mm) difference between planes of adjacent units.

*Units shall be manufactured so that the face of each unit which is exposed to view after erection complies with the following dimensional requirements.

†Unless joint width and fit-up requirements demand more stringent tolerance.

‡Applies to both panel and to major openings in panel. Tolerances apply to the difference of the two diagonal measurements.

Fig. 4.6.5 Brick faced architectural elements.

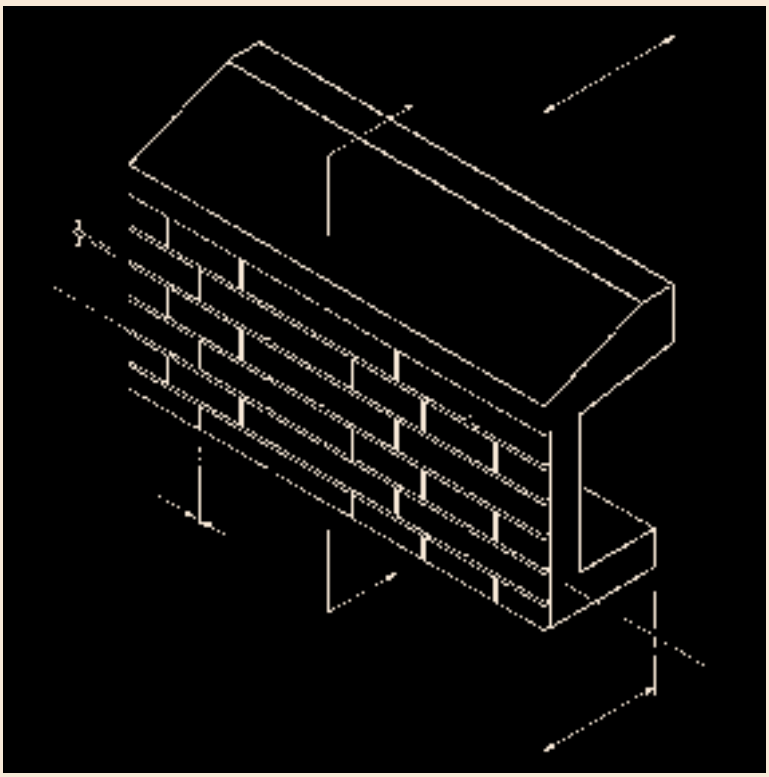

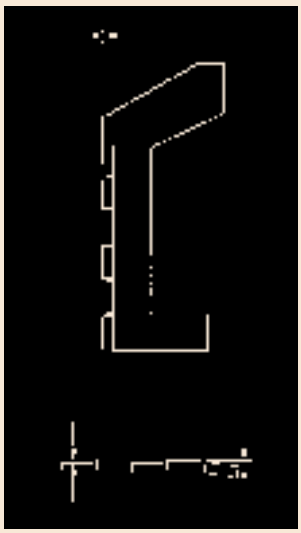

a = Alignment of mortar joints:
Jog in alignment ..... 1/8 in. [± 3 mm]
Alignment with panel centerline ..... ± 1/8 in. [± 3 mm]

b = Variation in width of exposed mortar joints ..... ± 1/8 in. [± 9 mm]

c = Tipping of individual bricks from the panel plane of exposed brick surface –1/4 in. [–6 mm]
≤ depth of form liner joint

d = Exposed brick surface parallel to primary control surface of panel ..... + 1/4 in., –1/8
[+ 6 mm, –3 mm]

e = Individual brick step in face from the panel plane of exposed brick surface ... –1/4 in. [–6 mm]
≤ depth of form liner joint

Note: The number of bricks that could exhibit these misalignments should be limited to 2% of the bricks on the panel. See other panel tolerances in Fig. 4.6.4.

Fig. 4.6.6 Columns.

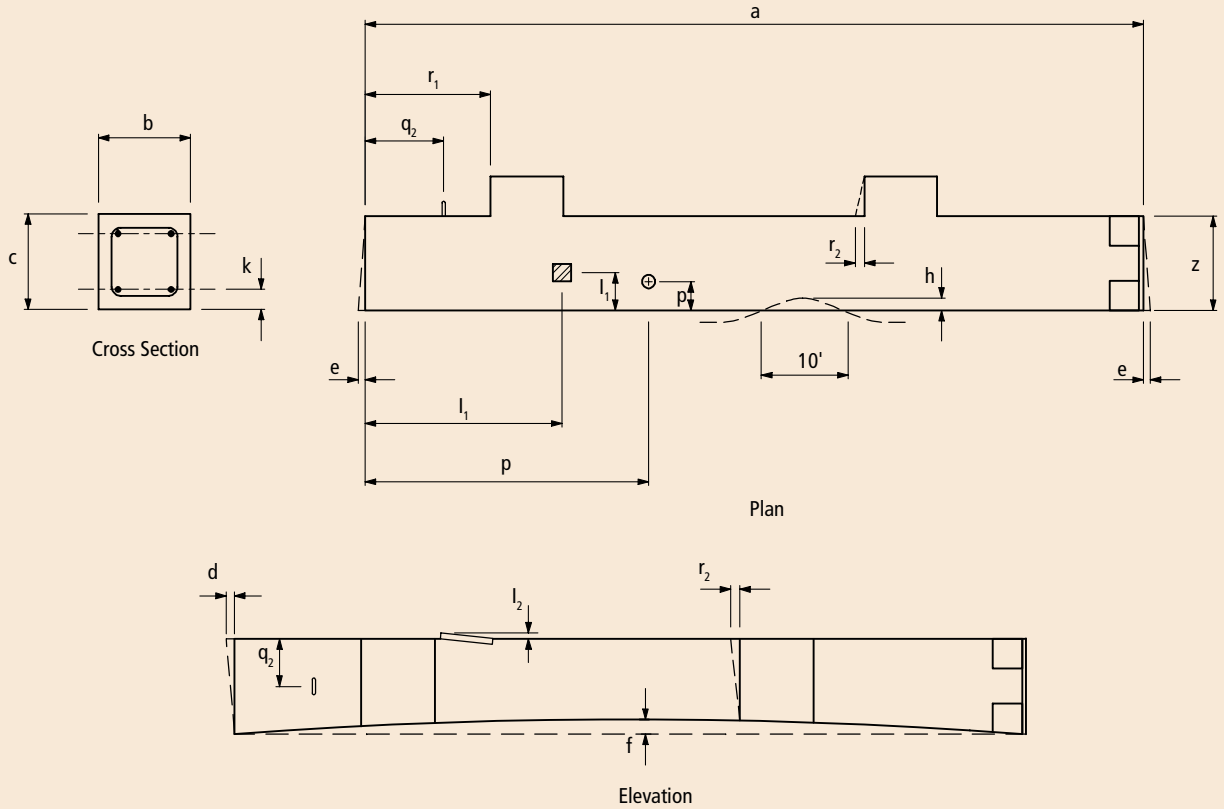

a = Length ..... ± 1/2 in. [± 13 mm]

b = Width ..... ± 1/4 in. [± 6 mm]

c = Depth ..... ± 1/4 in. [± 6 mm]

d = Variation from specified plan and squareness or skew ..... ± 1/8 in. per 12 in., ± 3/8 in. max. [± 3 mm per 300 mm, ± 10 mm max.]

e = Variation from specified elevation end squareness or skew ..... ± 1/8 in. per 12 in., ± 3/8 in. max. [± 3 mm per 300 mm, ± 10 mm max.]

f = Sweep ..... ± 1/8 in. per 10 ft, ± 1/2 in. max. [± 3 mm per 3 m, ± 13 mm max.]

h = Local smoothness of any surface ..... 1/4 in. per 10 ft [6 mm in 3 m]

k = Location of strand ..... ± 1/4 in. [± 6 mm]

l_1 = Location of embedment ..... ± 1 in. [± 25 mm]

l_2 = Tipping and flushness of embedment ..... ± 1/4 in. [± 6 mm]

p = Location of inserts for structural connections ..... ± 1/2 in. [± 13 mm]

q_1 = Location of handling device parallel to length of member ..... ± 6 in. [± 150 mm]

q_2 = Location of handling device transverse to length of member ..... ± 1 in. [± 25 mm]

r_1 = Location of haunch bearing elevation from end ..... ± 1/4 in. [± 6 mm]

r_2 = Variation from specified haunch bearing surface slope ..... ± 1/8 in. per 12 in., ± 3/8 in. max. [± 3 mm per 300 mm, ± 10 mm max.]

z = Base plate overall dimensions ..... ± 1/4 in. [± 6 mm]

Fig. 4.6.7 Architectural trim units.

Sills, Lintels, Copings, Cornices, Quoins, and Medallions

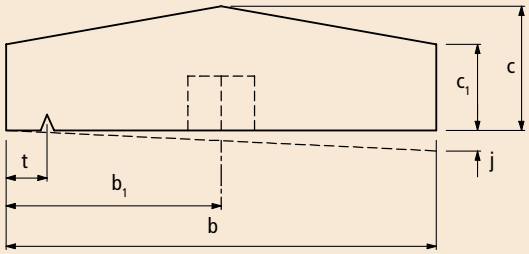

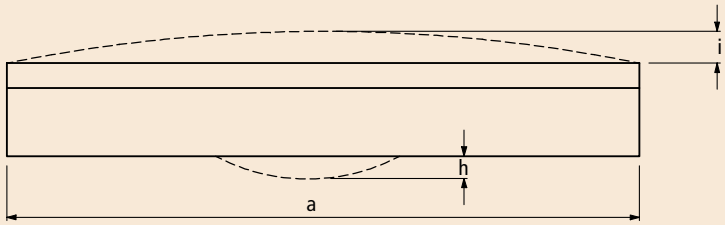

a = Length ..... ± 1/8 in. [± 3 mm]
Where one face will be installed in dead wall space of mortar joint ± 1/4 in. [± 6 mm]

b = Overall width of units* ..... ± 1/8 in. [± 3 mm]

b_1 = Location of inserts and appurtenances:
On formed surfaces ..... ± 1/8 in. [± 3 mm]
On unformed surfaces ..... ± 3/8 in. [± 9 mm]

c = Overall height of units* ..... ± 1/8 in. [± 3 mm]

c_1 = Total thickness ..... ± 1/8 in. [± 3 mm]
Flange thickness ..... ± 1/8 in. [± 3 mm]
Where one face will be installed in dead wall space of mortar joint ± 1/4 in. [± 6 mm]

t = Size and location of rustications and architectural features ..... ± 1/16 in. [± 1.5 mm]

h = Local smoothness ..... ± 1/8 in. per 5 ft [± 3 mm per 1.5 m]

i = Bowing ..... span/360, max., ± 1/4 in. [± 6 mm]

j = Warping† ..... ± 1/16 in. per ft. [± 1.5 mm per 0.3 m]

*Measured at face exposed to view.
†Measured per foot of distance from nearest adjacent corner.

Bollards, Benches, and Planters

a = Height or length ..... ± 1/4 in. [± 6 mm]

b = Width or diameter ..... ± 1/4 in. [± 6 mm]

o = Location of inserts and appurtenances:
Formed surfaces ..... ± 1/4 in. [± 6 mm]
Unformed surfaces ..... ± 1/4 in. [± 6 mm]

t = Size/location of rustication/features ....± 1/4 in. [± 6 mm]

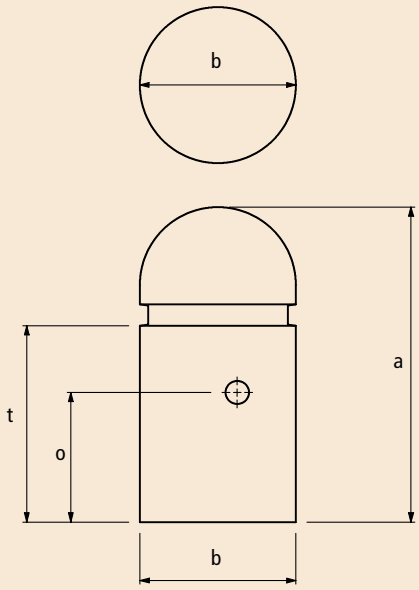

Pavers

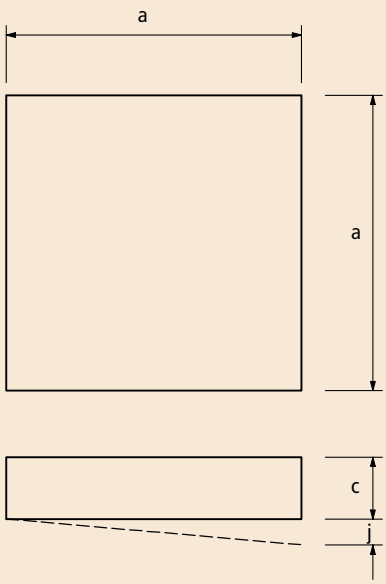

Pavers

a = Length or width ..... ± 1/16 in. [± 1.5 mm]

c = Thickness ..... ± 1/16 in. [± 1.5 mm]

j = Warping* ..... ± 1/32 in. [± 0.75 mm]

*Measured per foot [0.3 m] of distance from nearest adjacent corner.

Erection tolerances are both equipment and site dependent. There may be valid reasons to vary some of the recommended tolerances to account for unique project conditions. The erection tolerances should be carefully reviewed by the designer and the involved contractors and adjusted, if necessary, to meet the project requirements. The effects of adjusted tolerances on specific details at joints, connections, and in other locations in the structure should be evaluated by the designer. Different details may have varying amounts of sensitivity to tolerances. If the final erection tolerances are different from those given in this manual, the tolerances should be stated in writing and noted on the project erection drawings.

The erector is responsible for erecting the members within the specified tolerances and completing the connections in the manner specified. Appropriate surveying and layout procedures should be followed to ensure accurate application of tolerances. When a unit cannot be erected within the specified tolerances, the erector should notify the precaster and GC/CM to check the structural adequacy of the installation and determine if the connection design should be modified. No unit should be left in an unsafe condition. Any adjustments affecting structural performance, other than adjustments within the prescribed tolerances, should be made only after approval by the precast concrete design engineer.

The primary control surfaces or features on the precast concrete members are erected to be in conformance with the established erection and interfacing tolerances (Figs. 4.6.10 and 4.6.11). Clearances are generally allowed to vary so that the primary control surface can be set within tolerance. It is important to recognize product tolerances are not additive to the primary surface erection tolerances.

Secondary control surfaces that are positioned from the primary control surfaces by the product tolerances are usually not directly positioned during the erection process, but are controlled by the product tolerances. Thus, if the primary control surfaces are within erection and interfacing tolerances, and the secondary surfaces are within product tolerances, the member should be considered erected within tolerance. The result is that the tolerance limit for secondary surfaces may be the sum of the product and erection tolerances. Product tolerances, in general, must not exceed erection tolerances.

Because erection and product tolerances for some secondary control surfaces of a precast concrete member may be directly additive, the erection drawings should clearly define the primary erection control surfaces. If both primary and secondary control surfaces are critical, provisions for adjustment should be included. The accumulated tolerance limits may be required to be accommodated in the interface clearance. This may occur with window openings between two spandrels when the critical elevation, top or bottom and as indicated on the erection drawings, must be maintained. If more than one critical line is indicated, the erector should balance any deviations between the two edges. Surface and feature control requirements should be clearly outlined in the plans and specifications.

During wall panel installation, priority is generally given to aligning the exterior face of the units to meet aesthetic requirements. This may result in the interior face of units being out-of-plane.

Erection tolerances are largely determined by the actual alignment and dimensional accuracy of the building foundation and frame in those circumstances where the building frame is constructed from some material other than precast concrete. The GC is responsible for the plumbness, levelness, and alignment of the foundation and non-precast concrete structural frame, including the location of all bearing surfaces and anchorage points for precast concrete products.

The architect/engineer should clearly define in the specifications the maximum tolerances permitted in the foundation and building frame alignment, then should specify that the GC check frequently to verify these tolerances are being held. In addition, the architect/engineer should ensure that the details in the contract documents allow for the specified tolerances. To accommodate any misalignment of the building frame, connections should provide for vertical, horizontal, and lateral adjustments of at least 1 in. (25 mm).

If the precast concrete units are to be installed reasonably "plumb, level, square, and true," the actual location of all surfaces affecting their alignment, including the levels of floor slabs and beams, the vertical alignment of floor slab edges, and the plumbness of columns or walls, must be known before erection begins. The GC is expected to, and should be required to, establish (and maintain at convenient locations) control points, benchmarks, and lines in areas that remain undisturbed until the completion and acceptance of the project.

Tolerances for the building frame must be adequate to prevent interferences that may cause difficulty with panel installation. Whenever possible, beam elevations and column locations should be uniform in relation to the precast concrete units with a constant clear distance between the precast concrete and the support elements.

The location of hardware items cast into or fastened to the structure by the GC, steel fabricator, or other trades, should be located ±1 in. (±25 mm) in all directions (vertical and horizontal) from the specified location, plus a slope deviation of no more than ±$^1/_4$ in. (±6 mm) in 12 in. (300 mm) for critical bearing surfaces. Connection details, therefore, should consider the possibility of bearing surfaces being misaligned or warped from the desired plane, which would necessitate approved field adjustments to be made.

In the determination of erection tolerances, attention should also be given to possible deflection and/or rotation of structural members supporting precast concrete. This is particularly important when bearing on flexible or cantilevered structural members. Consideration should be given to both initial and to long-term deflection caused by creep of the supporting structural members. Specific tolerances cannot be assigned to erection deformations. By considering realistic tolerance variations and clearances, the influence of erection deformations can be minimized or eliminated for practical purposes.

Structural steel framing tolerances should be specified to conform with the American Institute of Steel Construction (AISC) *Code of Standard Practice for Steel Buildings and Bridges.* Particular attention is directed to the "Commentary" included in this code, which provides a detailed explanation of the specified erection tolerances. Mill, fabrication, and erection tolerances combined result in the final dimensional accuracy of the structural steel frame.

Precast concrete wall tolerances should follow those for the steel frame, because the allowable tolerances for steel frame structures make it impractical to maintain precast concrete panels in a true vertical plane in tall structures. Based on the allowable steel frame tolerances, it would be necessary to provide for a 3 in. (75 mm) adjustment in connections up to the 20th story (Fig. 4.6.8). Above the 20th story, the façade may be maintained within $^1/_{16}$ in. (1.6 mm) per story with a maximum total deviation of 1 in. (25 mm) from a true vertical plane, if connections that provide for 3 in. (75 mm) of adjustment are used. Connections that permit adjustments of +2 in. (+50 mm) to -3 in. (-75 mm) (5 in. [125 mm] total) will be necessary in cases where it is desired to construct the façade to a true vertical plane above the 20th story. These adjustments in connections are not economically feasible.

Fig. 4.6.8 Clearance example.

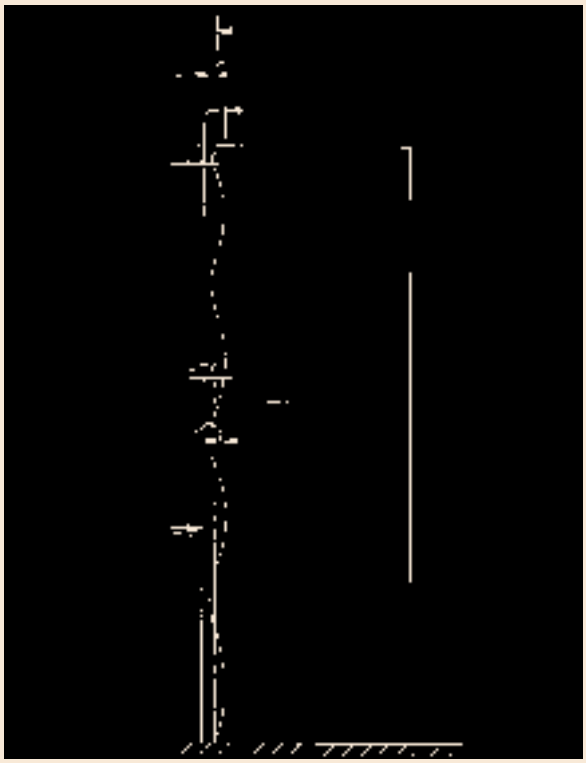

Note: 1 in. = 25.4 mm.

A solution that has proven both practical and economical is to specify the more stringent AISC elevator-column erection tolerances for steel columns in the building façade that will receive the precast concrete panels. This type of solution should be agreed to as part of the design and specification process, or at least prior to finalization of the fabrication erection process.

Cast-in-place concrete frame tolerances are given in ACI 117, *Standard Tolerances for Concrete Construction and Materials*, unless otherwise stated in the contract documents. ACI tolerances are not realistic for tall buildings. Also, greater variations in height between floors are more prevalent in cast-in-place con-

crete structures than in other structural frames. This may affect the location or mating of the inserts in the precast concrete units with the cast-in connection devices. Tolerances for cast-in-place concrete structures may have to be increased further to reflect local trade practices, the complexity of the structure, and climatic conditions. As a result, it is recommended that precast concrete walls should follow concrete frames in the same manner as for steel frames, if the details allow it and appearance is not affected.

The following tolerances, in addition to ACI 117 requirements, should be specified for cast-in-place concrete to which precast concrete units are to be connected:

1. Footings, caisson caps, and pile caps
   a. Variation of bearing of surface from specified elevation: ±1/2 in. (±13 mm)
2. Piers, columns, and walls
   a. Variation in plan from straight lines parallel to specified linear building lines:
      - 1/40 in./ft (0.7 mm/0.3 m) for adjacent members less than 20 ft (6 m) apart or any wall or bay length less than 20 ft.
      - 1/2 in. (13 mm) for adjacent members 20 ft (6 m) or more apart or any wall or bay length of 20 ft or more.
   b. Variation in elevation from lines parallel to specified grade lines:
      - 1/40 in./ft (0.7 mm/0.3 m) for adjacent members less than 20 ft (6 m) apart or any wall or bay length less than 20 ft.
      - 1/2 in. (13 mm) for adjacent members 20 ft (6 m) or more apart or any wall or bay length of 20 ft or more.
3. Anchor bolts
   a. Variation from specified location in plan:
      - 3/4 in. (19 mm) and 7/8 in. (22 mm) bolts ..... ± 1/4 in. (6 mm).
      - 1 in. (25 mm), 1 1/4 in. (32 mm), and 1 1/2 in. (38 mm) bolts .....± 3/8 in. (10 mm).
      - 1 3/4 in. (44 mm), 2 in. (51 mm), and 2 1/2 in. (64 mm) bolts .....± 1/2 in. (13 mm).
   b. Variation center to center of any two bolts within an anchor bolt group: ≤ 1/8 in. (≤3 mm).
   c. Variation from specified elevation: ± 1/2 in. (± 13 mm).
   d. Anchor bolt projection: – 1/4 in., + 1/2 in. (- 6 mm, + 13 mm).
   e. Plumbness of anchor bolt projection: ± 1/16 in./ft (± 1.6 mm/0.3 m)

AISC recommends hole sizes and position tolerance for various bolt diameters as follows:

Table 4.6.2. Anchor rod hole diameter and postion tolerance.

Anchor Rod Diameter, in. (mm)	Hole Diameter, in. (mm)	Position Tolerance, in. (mm)
3/4 (19)	1 5/16 (33)	±1/4 (±6)
7/8 (22)	1 9/16 (40)	±1/4 (±6)
1 (25)	1 13/16 (46)	±3/8 (±10)
1 1/4 (32)	2 1/16 (52)	±3/8 (±10)
1 1/2 (38)	2 5/16 (59)	±3/8 (±10)
1 3/4 (44)	2¾ (70)	±1/2 (±13)
2 (50)	3¼ (82)	±1/2 (±13)
2 1/2 (63)	3¾ (95)	±1/2 (±13)

Fig. 4.6.9 Design concepts to accommodate site tolerances.

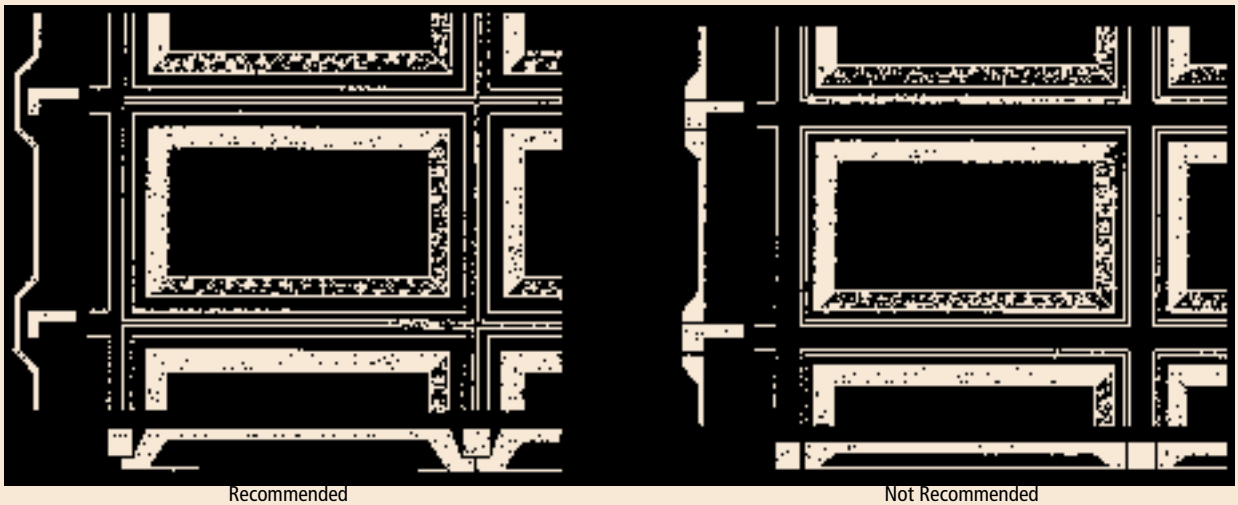

It should be recognized that ACI 117 applies primarily to reinforced concrete buildings, and the AISC *Code of Standard Practice* applies only to steel building frames. Neither of these standards apply to buildings of composite construction (that is, concrete floor slabs supported by steel columns or concrete-encased structural steel members, fireproofed frames, or steel frames with precast concrete cladding). Obviously, the location of the fireproofing face on the steel, as well as that of the steel member itself, are both critical. Because the alignment of composite members, fireproofing, and masonry work are not controlled by referencing these standards, the architect/engineer should require that the location of all such materials contiguous to the precast concrete units be controlled within tolerances that are no less stringent than those specified in ACI 117. Should there be some doubt as to what these tolerances should be, the precast concrete manufacturer or erector should be consulted for advice.

It is generally poor practice to design gaps or joints between site work and precast concrete as an architectural feature. A case in point would be the designing of individual panels to fit between cast-in-place columns and beams with either of these structural members exposed (Fig. 4.6.9). Unless the cast-in-place structure is executed to well above normal tolerances, the width of joints must be allowed with a large tolerance (± $^1/_2$ in. [± 13 mm] in the case of a 20 ft [6 m] opening). The actual joint width may differ in each bay, and will certainly require sealants with corresponding flexibility. Joint widths may be adjusted to enable them to be equal at either end of a panel, but efforts toward equalizing the joints on either side of a column cannot be attempted unless panels can be adjusted horizontally after erection. The problems this could cause are avoided where the cladding passes in front of the columns and the jointing is between the panel edges.

Total precast concrete systems—Erection tolerances are less critical in structures consisting entirely of precast concrete units than for structures that are combinations of precast and cast-in-place concrete or steel. Where precast concrete units connect to site work, such as at footings or foundation walls, larger erection tolerances are particularly necessary.

Erection tolerances—The erection tolerances of architectural precast concrete are given in Fig. 4.6.10 and 4.6.11. These are guidelines only and each project must be considered individually to ensure that the stated tolerances are applicable. After precast concrete erection and before other trades interface any materials with the precast concrete members, it should be verified that the precast concrete elements are erected within the specified tolerances.

Because a panel base connection often allows some positioning flexibility, it is often more important to control dimensions from haunch to haunch in walls or multistory columns rather than to maintain tight control of actual haunch location dimensions from the end of the member.

Fig. 4.6.10 Architectural walls/spandrels erection tolerances.

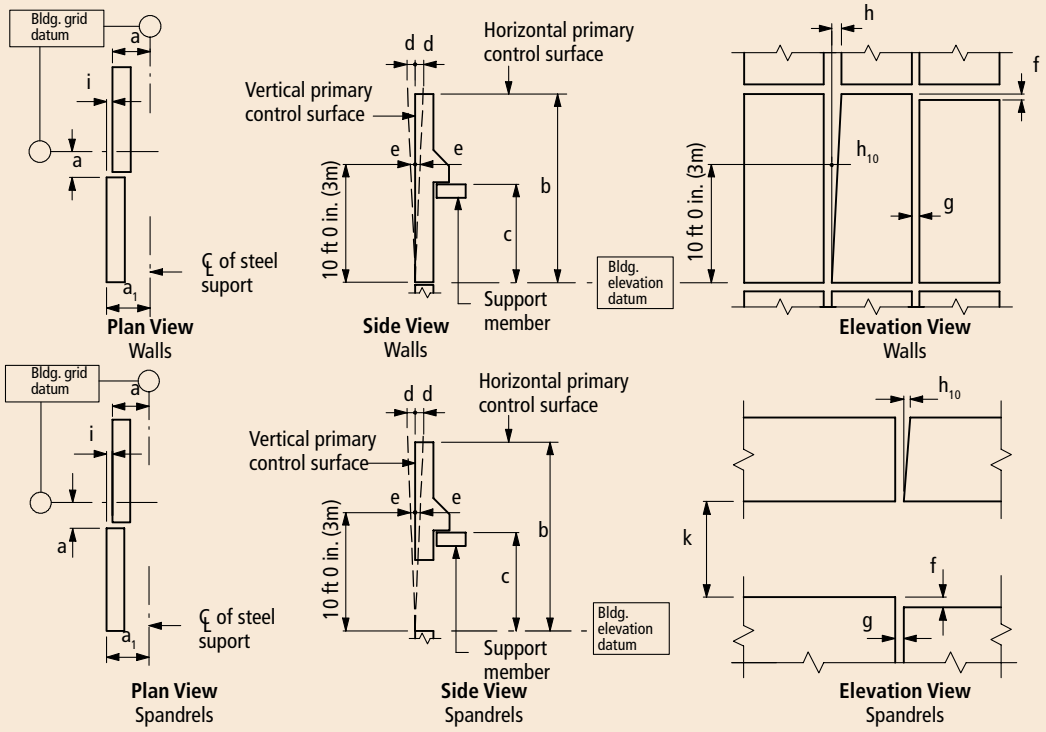

The primary control surfaces are usually as shown, although this needs to be confirmed on a job-by-job basis.

a = Plan location from building grid datum* ..... ± 1/2 in. [± 13 mm]

a_1 = Plan location from centerline of steel support† ..... ± 1/2 in. [± 13 mm]

b = Top elevation from nominal top elevation:
Exposed individual panel ..... ± 1/4 in. [± 6 mm]
Nonexposed individual panel ..... ± 1/2 in. [± 13 mm]

c = Support haunch elevation from nominal elevation:
Maximum low ..... 1/4 in. [6 mm]
Maximum high ..... 1/2 in. [13 mm]

d = Maximum plumb variation over height of structure or 100 ft [30 m] whichever is less* ..... 1 in. [25 mm]

e = Plumb in any 10 ft [3 m] of element height ..... 1/4 in. [6 mm]

f = Maximum jog in alignment of matching edges:
Exposed relative to adjacent panel ..... 1/4 in. [6 mm]
Nonexposed relative to adjacent panel ..... 1/2 in. [13 mm]

g = Joint width (governs over joint taper) ..... ± 1/4 in. [± 6 mm]

h = Joint taper maximum ..... 3/8 in. [10 mm]

h_{10} = Joint taper over 10 ft [3 m] length ..... 1/4 in. [6 mm]

i = Maximum jog in alignment of matching faces ..... 1/4 in. [6 mm]

j = Differential bowing or camber as erected between adjacent members of the same design ..... 1/4 in. [6 mm]

k = Opening height between spandrels ..... ± 1/4 in. [± 6 mm]

*For precast concrete buldings in excess of 100 ft [30 m] tall, tolerances "a" and "d" can increase at the rate of 1/8 in. [3 mm] per story to a maximum of 2 in. [50 mm].

†For precast concrete elements erected on a steel frame, this tolerance takes precedence over tolerances on dimension "a".

Fig. 4.6.11 Column erection tolerances.

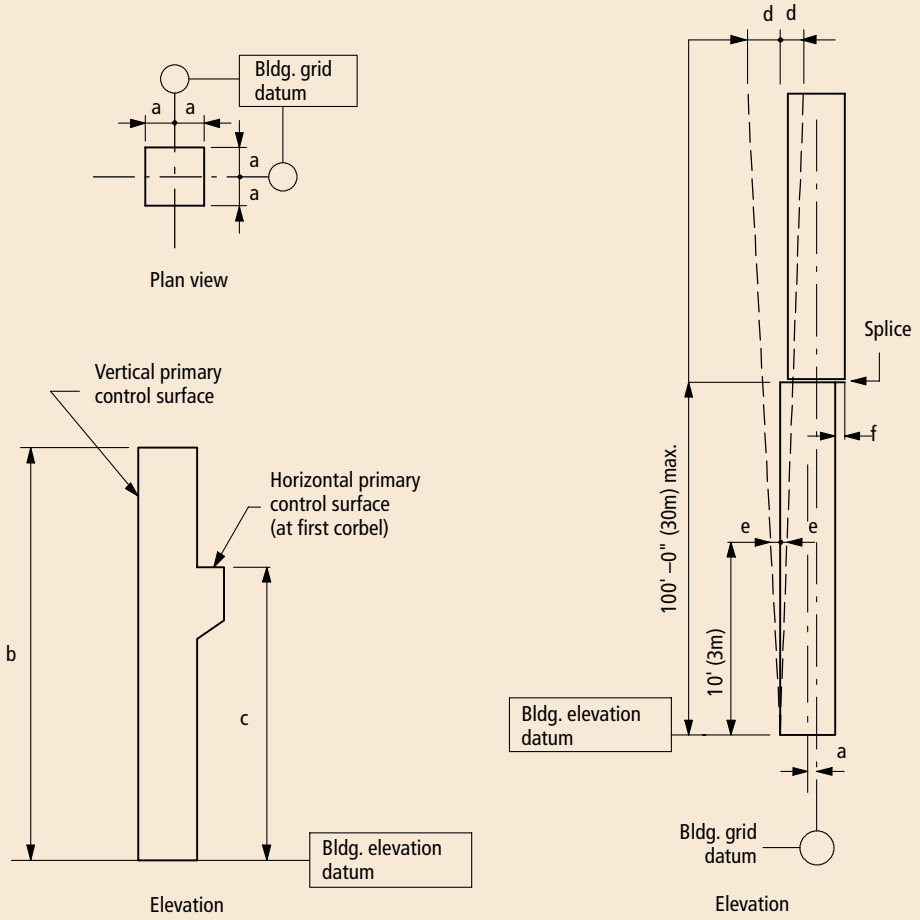

The primary control surfaces are usually as shown, although this needs to be confiremed on a job-by-job basis.

a = Plan location from building grid datum:
Structural applications ..... ± 1/2 in. [13 mm]
Architectural applications ..... ± 3/8 in. [9 mm]

b = Top elevation from nominal top elevation:
Maximum low ..... 1/2 in. [13 mm]
Maximum high ..... 1/4 in. [6 mm]

c = Bearing haunch elevation from nominal elevation:
Maximum low ..... 1/2 in. [13 mm]
Maximum high ..... 1/4 in. [6 mm]

d = Maximum plumb variation over height of element (element in structure of maximum height of 100 ft [30 m]) ..... 1 in. [25 mm]

e = Plumb in any 10 ft [3 m] of element height ..... 1/4 in. [6 mm]

f = Maximum jog in alignment of matching edges:
Architectural exposed edges ..... 1/4 in. [6 mm]
Visually non-critical edges ..... 1/2 in. [13 mm]

If reasonable tolerances and adjustments have been designed into the construction details, more precise installation and general improvement in appearance are achieved, and the erector should be able to:

1. Avoid joint irregularities, such as tapered joints (panel edges not parallel), jogs at intersections, and non-uniform joint widths.
2. Maintain proper opening dimensions.
3. Properly execute all fastening connections.
4. Align the vertical faces of the units to avoid out-of-plane offsets.
5. Adjust for the accumulation of tolerances.

The precast concrete erector should perform a survey of the building as constructed and lay out joint centerlines spaced along an elevation prior to actual product installations and center the units between them. This will keep the differential variation in joint width to a minimum, as well as identifying problems caused by building frame columns or beams being out of dimension or alignment. Horizontal and vertical joints should be aligned and uniform joint widths should be maintained as erection progresses.

Variations from true length or width dimensions of the overall structure are normally accommodated in the joints or, where this is not feasible or desirable, at the corner panels, in expansion joints, or in joints adjacent to other wall materials. A liberal joint width should be allowed if variations in overall building dimensions are to be absorbed in the joints. This may be coupled with a closer tolerance for variations from one joint to the next for uniformity of appearance purposes. The individual joint width tolerance should relate to the number of joints over a given building dimension. For example, to accommodate reasonable variations in actual site dimensions, a $^3/_4$ in. (19 mm) joint may be specified with a tolerance of ± $^1/_4$ in. (±6 mm) but with only a $^3/_{16}$ in. (5 mm) differential variation allowed between joint widths on any one floor or between adjacent floors.

In a situation where a joint must match an architectural feature (such as a false joint), a large variation from the theoretical joint width may not be acceptable and tolerance for building lengths may need to be accommodated at the corner panels. A similar condition often occurs where precast concrete is interspersed with glass or curtain wall elements, as in precast concrete mullion projects. Close tolerances are often mandatory between the mullion and the glass or curtain wall. This condition demands additional flexibility that may be provided by the corner details.

Clearance is the space provided between the structure and precast concrete members. It is one of the most important factors to consider in erection because of its impact on the final appearance of the structure. The clearance space should provide a buffer area where frame, erection, and product tolerance variations can be absorbed. Clearances should be reviewed during the design stages of the project to ensure they are appropriate from both erection and aesthetic points of view.

With reasonable tolerances for the building frame established, it is equally important that the designer provide adequate clearances, for example, between the theoretical face of the structure and the back face of a precast concrete panel in detailing the panel and its relationship to the building structure. If clearances are realistically assessed, they will enable the erector to complete the final assembly without field-altering the physical dimensions of the precast concrete units. Adjacent materials may include products such as glass or subframes that are installed after the precast concrete panels are in place. If sufficient space is not provided, alignment of the wall as specified will likely necessitate delays and extra costs and may be impossible.

The failure to provide adequate clearances may cause problems during wall installation. When determining clearances, the following primary basic considerations should be addressed:

- Product tolerance
- Type of member
- Size of member
- Location of member
- Member movement
- Function of member
- Erection tolerance
- Fireproofing of steel
- Thickness of plates, bolt heads, and other projecting elements
- Working space to make the connection

Designing clearances should consider not only the dimensional tolerance of the precast concrete members, but also the dimensional accuracy of the support system (building frame). Clearances must enable the erector to complete the final assembly without field altering the physical dimensions of the precast concrete units.

The type of member is partially accounted for when product tolerances are considered. There are additional factors that should also be considered. An exposed-to-view member requiring small erection tolerances requires more clearance for adjustment than a non-exposed member with a more liberal erection tolerance. Similarly, a corner member should have a large enough clearance so it can be adjusted to line up with both of the adjacent panels.

The size and weight of the member are other considerations in determining erection clearances. Large members are more difficult to handle than smaller ones; a large member being erected by a crane requires more clearance than small member that can be hand-erected or adjusted.

Clearance design should consider member deflection, rotation, and movements caused by temperature expansion and contraction, creep, and shrinkage. Clearance between a vertical member and a horizontal member should allow for some movement in the horizontal member to prevent the vertical member from being pushed or pulled out of its original alignment. If not considered in the design, such movements can create waterproofing problems or roofing failure at the interface.

Consideration should be given to the limits of adjustment permitted by the connection details. All connections should provide maximum adjustability in all directions that is structurally or architecturally feasible. When a 1 in. (25 mm) clearance is needed but a 2 in. (50 mm) clearance creates no structural or architectural difficulty, the 2 in. (50 mm) clearance should be selected. Closer tolerances are required for bolted connections than for most grouted connections. To accommodate any misalignment of the building frame, connections should provide for vertical, horizontal, and lateral adjustments of at least $1^1/_2$ in. (38 mm). If a connection is attached to a spandrel beam or column that is fireproofed, more clearance will be needed to install fastenings than when the anchors are located on the top surface of beams and the sides of columns. Also, space should be provided to make the connection (sufficient room for welding or adequate space to place a wrench to tighten a bolt).

Nominal clearance dimensions shown on the erection drawings should be equal to the actual clearance required plus the outward tolerance permitted for the adjacent construction, and should be determined based on the assumption that the construction will be as far out of position in the wrong direction as is allowed. Special attention should be given to complex geometric interfaces. Connections should be designed to accommodate the clearance plus tolerance.

If the clearance provided is too tight, erection may be slow and costly because of fit-up problems and the possibility of rework. A good rule of thumb is that at least $^3/_4$ in. (19 mm) clearance should be required between precast concrete members, with 1 in. (25 mm) preferred; $1^1/_2$ in. (38 mm) is the minimum clearance between precast concrete members and cast-in-place concrete, with 2 in. (50 mm) preferred. For steel structures, $1^1/_2$ in. (38 mm) is the minimum clearance between the back of the precast concrete member and the surface of the fireproofing, with 2 in. preferred. If there is no fireproofing required on the steel, then $1^1/_2$ in. (38 mm) minimum clearance should be maintained. At least a $1^1/_2$ to 2 in. (38 to 50 mm) clearance should be specified in tall structures, regardless of the structural framing materials. The minimum clearance between column covers and columns should be $1^1/_2$ in. (38 mm); 3 in. (75 mm) is preferred because of the possibility of columns being out of plumb or a column dimension causing interference with completion of the connection. If clearances are realistically assessed, they will solve many installation problems. Where large tolerances have been allowed for the supporting structure, or where no tolerances for the structure are given, the clearance may have to be increased.

4.6.4 Interfacing Tolerances

Interfacing tolerances and clearances are required for the joining of different building materials in contact with or in close proximity to precast concrete, and to accommodate the relative movements expected between such materials during the life of the building. Typical examples include tolerances for window and door openings; joints, flashing, and reglets; mechanical and electrical equipment; elevators and interior finishes; and walls and partitions.

Fabrication and erection tolerances of other building materials must also be considered in design of the precast concrete units and coordinated to accommodate the other functional elements comprising the total structure. Unusual requirements or allowances for interfacing should be stated in the contract documents.

When the matching of different building elements

is dependent on work executed at the construction site, interface tolerances should be related to erection tolerances. When the execution is independent of site work, tolerances should closely match the normal manufacturing tolerances for the materials to be joined plus an appropriate allowance (clearance) for differential volume changes between materials. For example, window elements have installation details that require certain tolerances on window openings in a precast concrete panel. If the opening is completely contained within one panel, can the required tolerances on the window opening be economically met? If not, is it less expensive to procure special windows or to incur the added cost associated with making the tolerances on the window opening more stringent? Also, openings for aluminum windows should allow clearance for some thermal expansion of the frame.

It is important to note that interfacing tolerances may be system dependent. For example, windows of one type may have a different interface tolerance than windows of another type. If material or component substitutions are made after the initial design is complete, the responsibility for ensuring that the interface tolerances are compatible with adjacent building materials passes to the party initiating the substitutions.

Adequate interface/erection tolerances are required for window openings, doors, or louvers common to two or more panels. The cost of erecting the panels to achieve required window interface tolerances must also be considered. A similar condition often occurs where precast concrete is interspersed with glass or metal curtain wall elements, as in many precast concrete spandrel or mullion projects. Close tolerances are often mandatory between the mullion and the glass or curtain wall. This condition demands additional flexibility that may be provided in the corner details. Also, any bow in spandrel panels is critical if windows are to be installed between panels.

Product tolerances, erection tolerances, and interface tolerances together determine the dimensions of the completed structure. Which tolerance takes precedence is a question of economics, which should be addressed by considering fabrication, erection, and interfacing cost implications.

Special tolerances or construction procedures require early decisions based on overall project economics. Once these decisions have been made, they should be reflected in the project plans and specifications. All special tolerance requirements or allowances for interface, special details, and special procedures should be clearly spelled out in the specifications. The plans and specifications then define the established tolerance priority for the project.

4.7 JOINTS

4.7.1 General

The successful performance of a building exterior is frequently defined by its ability to keep rain and the elements outside, away from the building's occupants. Precast concrete panels are relatively impermeable to water. Moisture will not penetrate through precast concrete panels. The joints between precast concrete panels or between panels and other building materials must be considered to prevent water and air penetration through the building envelope. The design and execution of these joints is therefore of the utmost importance and must be accomplished in a rational, economical manner. Joint treatment also has an effect on the general appearance of the project. To ensure the joint and sealant give the desired performance, selecting the right product, appropriate joint design, and proper surface preparation and application technique is required.

The penetration of moisture into a building envelope may enter directly (through an opening), by gravity, capillary action, and as a result of the mean (steady state) air pressure difference across the wall.

Joint sealants are fully exposed to the major agents of aging and deterioration—ultraviolet light and thermal cycling. High-performance sealants with a low modulus and high movement capability must be used to ensure quality long-term performance. In new construction, labor to material costs are typically 4 to 1, while in renovation/rehabilitation the ratio may be 8 to 1 or more.

Joints are required to accommodate changes in wall panel or structure dimensions caused by changes in temperature, moisture content, or deflection from applied design loads. The joints between panels are normally designed to accommodate local wall movements rather than cumulative movements. Sealants subjected to volume change movements, either horizontally or vertically at building corners, at adjacent non-precast concrete construction, or at windows not having similar movements must be given special con-

sideration. Some wall designs handle water properly in two-dimensional blueprints, but fail in three-dimensional reality. Isometric drawings should be used to show the proper intersection of horizontal and vertical seals. These intersections are a prime source of sealant problems.

4.7.2 Types of Joints

Joints between precast concrete wall units may be divided into three basic types: one-stage, two-stage, and expansion joints.

One-Stage joint–As its name implies, the one-stage (face-sealed) joint has a single line of caulking for weatherproofing. This is normally in the form of a gun-applied sealant close to the exterior surface of the precast concrete panel (Fig. 4.7.1).

The principal advantages of face-sealed joints are their simplicity, ease of installation, and almost universal suitability for normal joints between precast concrete panels. No grooves or special shapes are necessary. Thus, one-stage joints are normally the most economical with regard to initial cost. However, the economics may change when maintenance costs are included in the evaluation. One-stage joints provide adequate air leakage and water penetration control in most climates. Their performance depends greatly on the quality of sealant materials, the condition of joint surfaces, quality of field installation, and the overall wall design.

Because sealants are subject to deterioration from the elements and ultraviolet (UV) exposure, it is recommended that the sealant be set back into the joints by using recessed joints. This partially protects the sealant from rain, wind, and UV light.

Two-Stage joint–Watertightness of sealant joints can be improved by installing a second line of sealant in each joint. The inner seal is placed inside the joint, generally from the exterior, and recessed a minimum of 2 to $2^1/_2$ in. (50 to 63 mm) from where the back of the front sealant and backing will be located or to the back of insulation in a sandwich (insulated) wall panel. This layer provides redundancy in the system, as it is fully protected from weather and UV exposure by the outer layer of sealant, which is installed in the normal manner.

This approach requires the installation of $^3/_8$ in. (10 mm) weep openings in the exterior seal to allow water

Fig. 4.7.1 Single stage joint.

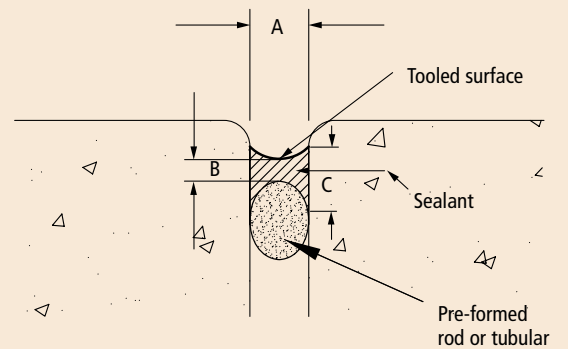

Key Points:
1. Dimension C must be at least $^1/_4$ in.
2. Ratio of A:B should be 2:1 minimum
3. Joint surface tooled concave.
4. Dimension B = $^3/_8$ in. with a minimum of $^1/_8$ in. over the crown of backer rod.
5. Dimension A = $^3/_4$ in. minimum recommended.

Note: 1 in. = 25.4 mm

contained by the inner seal to exit the cavity between joint seals. Near the junction of the horizontal and vertical joints, the inner seal must turn out to the plane of the exterior seal at regular intervals to force water out of the joint (Fig. 4.7.2). This termination requires care in detailing and construction. Failure to provide these weep openings results in trapped water within the joint and ponding against both seals; this accelerates deterioration of the sealant material and its bond to the substrate.

These joints are based on the open rainscreen principle. They are sometimes known as ventilated or pressure equalization joints and are favored for exterior wall construction in Canada. The rainscreen principle is based on the control of the forces that can move water through small openings in a face-sealed wall system, rather than the elimination of the openings themselves.

These joints have two lines of defense for weatherproofing. The typical joint consists of a rain barrier near the exterior face and an air retarder close to the interior face of the panel. The rain barrier is designed to shed most of the water from the joint, and the wind-barrier or air retarder is the demarcation line between outside and inside air pressure.

Openings in the rain barrier allow air to rapidly enter

until the pressure inside the chamber is equal to the wind pressure acting against the outer wall, which prevents water from entering the chamber. The pressure difference across the exterior layer is essentially zero, and wind pressure is transferred to the inner, airtight layer. Rain does not penetrate to the air chamber and, subsequently, to the interior of the building because there is no wind pressure forcing it through the exterior layer. Any moisture entering the joint will cling to the joint walls and then be drained out by the transverse seal.

The airtightness of the air retarder is critical in governing the speed at which pressure equalization occurs. Pressure equalization must take place almost instantaneously for a rainscreen wall to be effective. The size of vent opening must reflect the size of the joint to be pressure equalized.

Typical details of two-stage vertical joints are shown in Figs. 4.7.2 and 4.7.3. This system is especially applicable to high-rise buildings subject to severe climatic exposure (greater than 5000 degree days). The warm, moist air moving from the building interior to the exterior usually carries moisture, which could cause condensation. Air must be prevented from contacting cold surfaces in the wall. In northern climates, thermal bridges can occur and allow condensation to form a buildup of frost in or on the walls, which may be thought to be a failure of the joint sealant. This frost later can melt and run back inside the building, giving the impression that the building is leaking.

Water either from penetration or condensation in the joint should be drained from the joint by proper sealant installations. The second line of sealant should be brought to the front face at regularly spaced intervals along the height of vertical joints, usually near the junction of the horizontal and vertical joints at each floor level. Therefore, if any moisture does come out of the system, it will run down the face of the joint sealant and not over the face of the panels.

A spacing of two or three stories may be sufficient for low-rise buildings and in areas of moderate wind velocities. Factors to consider when using two-stage joints are:

1. Higher initial cost due to labor and materials required for their successful application.
2. Sealants are not easily placed at the back of the two-stage joint unless 1 to $1^3/_8$ in. (25 to 35 mm) joints are used. Therefore, conscientious workers or intensive supervision throughout the installation procedure is necessary, because inspection of the completed installation is difficult.

Fig. 4.7.2 Two-stage vertical joints.

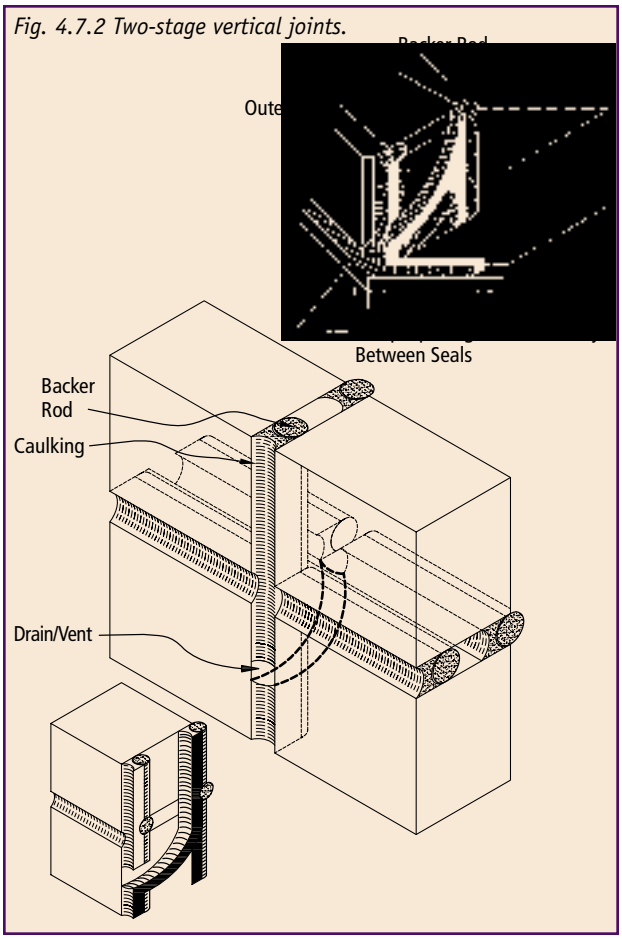

Panel configurations and joint widths should permit a careful applicator to successfully install both lines of sealant from the exterior. The special tools required may include an extension for the nozzle of the caulking gun and a longer tool for tooling the interior sealant.

The architect, precaster, erector, and sealant applicator must all understand the function of the two-stage joints if optimum results are to be achieved. The dimensions of the joints must be maintained at all times. The most common mistake in the installation of two-stage joints is leaving gaps in the air seal.

4.7.3 Expansion Joints

Cumulative movements, as well as differential expansion movement of adjacent wall materials, are generally taken by specially designed expansion joints. Because an

Fig. 4.7.3 Sealant and joint details.

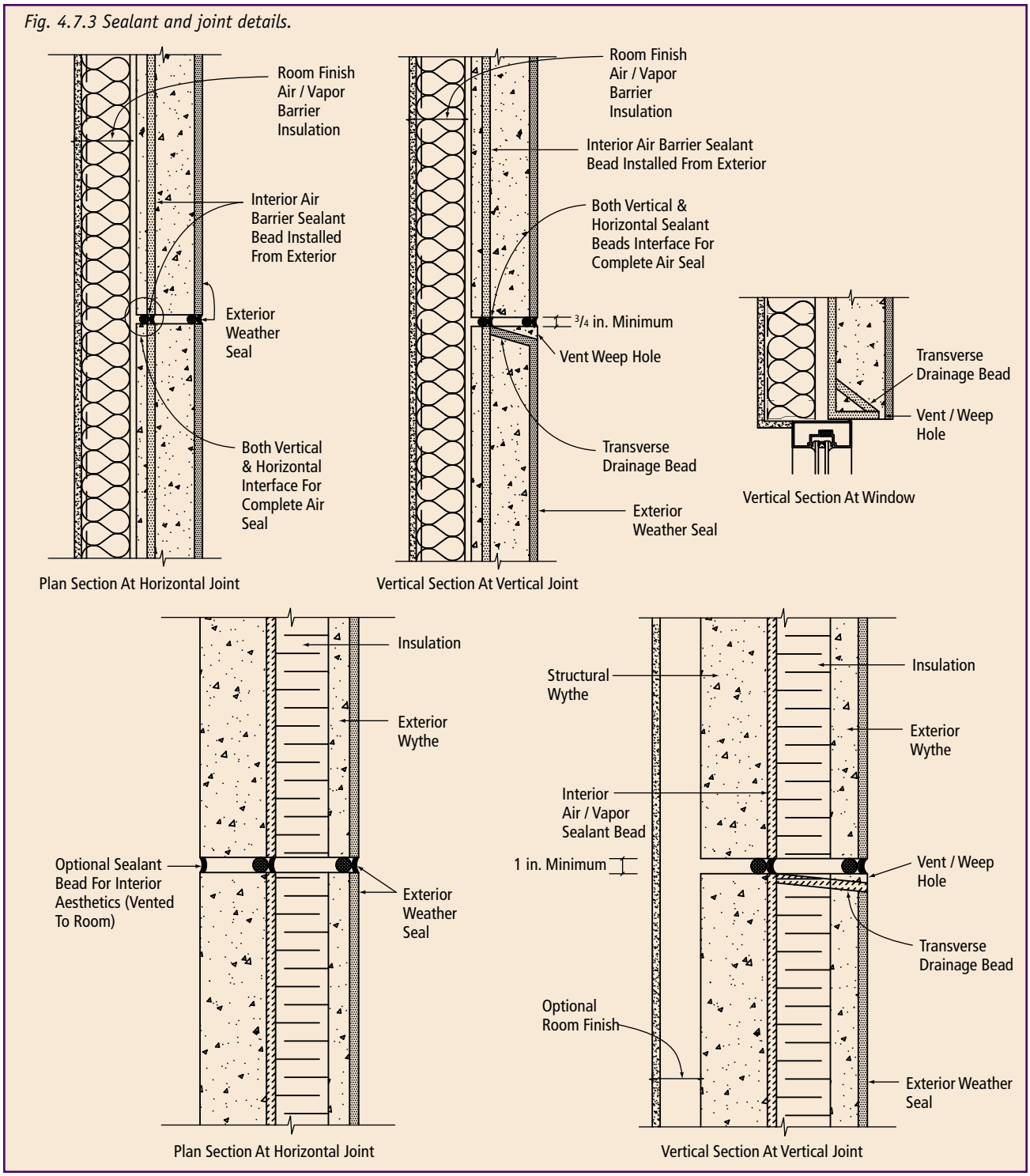

expansion joint may have to accommodate considerable movement, it should be designed as simply as possible. Although this might result in an appearance somewhat different from a normal joint, the architect is urged to either treat it as an architectural feature or simply leave it as a different, but honest, expansion joint.

Seismic seals are a special case of expansion joints. Such joints are generally quite large and are used between new and existing buildings to protect the joint from moisture and allow the structures to move from thermal expansion, wind drift, and seismic motions without damage. Seismic joints are designed to ac-

Fig. 4.7.4 Expansion seal in vertical joint system.

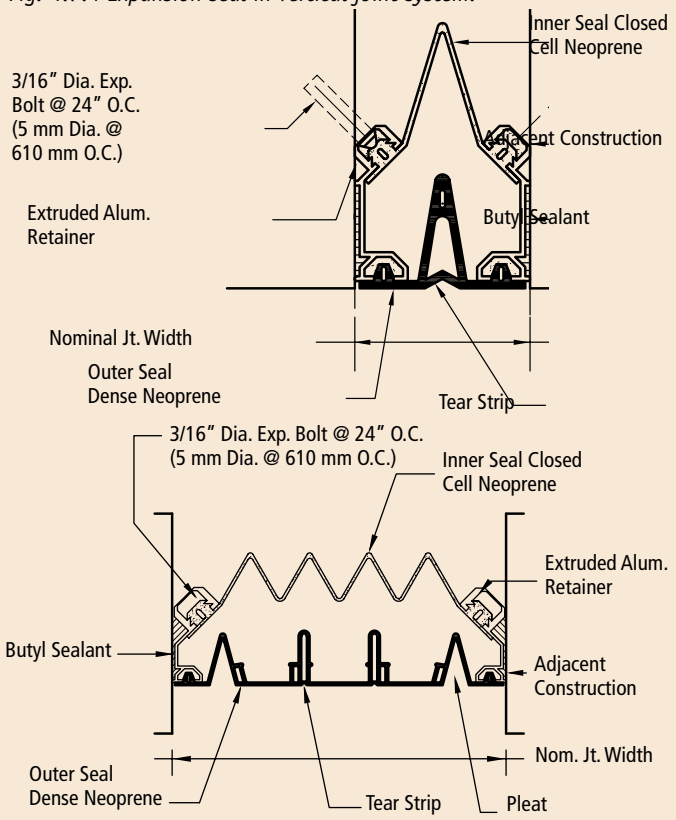

Note: Location and number of tear strips vary with joint size; 1 in. = 25.4 mm.

commodate both vertical and horizontal movement. They are available in sizes from 2 to 12 in. (50 to 305 mm). Wider openings can be accommodated by joining seal sizes together.

Materials for expansion joints must be chosen for their ability to absorb appreciable movement while performing their primary function of controlling the movement of moisture and air. Figure 4.7.4 shows bellows-type expansion seals of neoprene that accommodate thermal movement and seismic movement. Joints must be designed first for weather protection longevity, then for movement, and finally for appearance. In most cases, this requires that special gasket materials be used, rather than sealants. Otherwise, the requirements for expansion joints are similar to those listed previously for other joints.

4.7.4 Number of Joints

The number of joints in the architectural design should be minimized. This will result in a lower overall-cost for the joints, potentially lower maintenance costs, and will increase economy by working with larger panels.

Limiting panel sizes to minimize movements in the joints is not recommended. It is generally more economical to select larger panels and design the joints and sealants to allow for anticipated movements. Optimum panel size should be determined by erection conditions, available handling equipment, and local transportation limitations as to panel weight and sizes (see Section 3.3.9).

If the desired appearance demands additional joints, false joints may be used to achieve a more balanced architectural appearance. In order to match appearance of the two joints, the finish of the false joints should simulate the gaskets or sealants used in the real joints. Caulking false joints adds unnecessary expense.

4.7.5 Location of Joints

Joints are simpler to design and execute if they are located at the maximum panel thickness. If there are any ribbed projections at the edges of the panels, joints should be placed at this location. Ribs at the edges improve the structural behavior of the individual unit. Also, panel variations—possible warping or bowing—are less noticeable when the joints are placed between ribs than when the joints are located in flat areas. However, complete peripheral ribs are not recommended because they are likely to cause localized water runoff resulting in unsightly staining. Instead, ribs should be placed at vertical panel edges. If the ribs are too narrow to accommodate joints, the full rib may be located in one panel only.

Vertical joints should be located on grid lines. Horizontal joints should be near, but above, floor lines. The designer should allow the precaster to optimize panel sizes for economy with false joints, if necessary. The location of joints between precast concrete panels should be considered as an integral part of the evaluation of economical fastening of the units.

Locating and detailing joints (real or false) is an important factor in creating weathering patterns for a building. Joints should be made wide and recessed to limit unexpected weathering effects (Fig. 4.7.5). Recessed joints screen the joint from rain by providing a dead-air space that reduces air pressure at the face of the sealant. Also, the joint profile channels the rain runoff, helping to keep the building façade clean from unsightly runoff patterns. The designer should determine where the water will finally emerge. Setbacks should be provided at window perimeters and other

Fig. 4.7.5 Typical architectural panel joints.

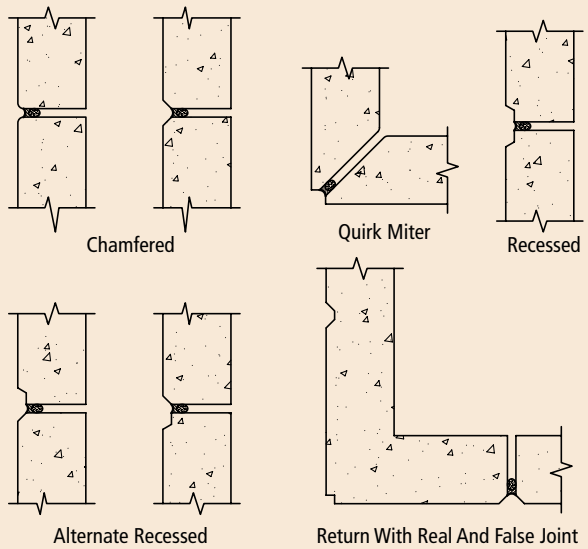

Fig. 4.7.6 Proper channeling of water.

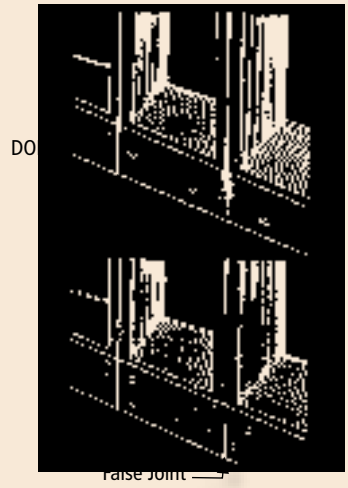

Fig. 4.7.7 Staggered architectural wall panels.

vulnerable joints in the wall system to reduce the magnitude and frequency of water exposure.

Figure 4.7.6 shows an elevation where some of the false vertical joints, into which water is channeled, discharge this water over a vertical concrete surface with fewer joints than at higher levels. This causes a marked washing effect at termination of the joint; the water should be directed until it reaches the ground or a drainage system.

Joints in forward-sloping surfaces are difficult to weatherproof, especially if they collect snow or ice. This type of joint should be avoided, whenever possible. When forward sloping joints are used, the architect should take special precautions against water penetration.

All joints should be aligned, rather than staggered, throughout their length (Fig. 4.7.7). Non-aligned joints subject sealants to shear forces in addition to the expected compression or elongation forces. The additional stress may cause sealants to fail. In addition, non-aligned joints force panels to move laterally relative to each other, inducing high tensile forces.

4.7.6 Width and Depth of Joints

Joint width must not only accommodate variations in the panel dimensions and the erection tolerances for the panel, but must also provide a good visual line and sufficient width to allow for effective sealing.

The performance characteristics of the joint sealant should be taken into account when selecting a joint size. Joints between precast concrete units must be wide enough to accommodate anticipated thermal expansion, as well as other building movements and proper sealant installation. Joint tolerances must be carefully evaluated and controlled if the joint sealant system is to perform within its design capabilities. When joints are too narrow, bond or tensile failure of the joint sealant may occur and/or adjacent units may come in contact and be subjected to unanticipated loading, distortion, cracking, and local crushing (spalling).

Joint widths should not be chosen for reason of appearance alone, but must relate to panel size, building tolerances, joint sealant materials, and adjacent surfaces. The required width of the joint is determined by the temperature extremes anticipated at the project location, the movement capability of the sealant to be used, the temperature at which the sealant is initially applied, panel size, fabrication tolerances of the precast concrete units and panel installation methods. The following factors take precedence over

appearance requirements:

1. **Temperature extremes and gradients.** The temperature range used when selecting a sealant must reflect the differential between seasonal extremes of temperature and temperature at the time of sealant application. Concrete temperatures can and normally will vary considerably from ambient air temperatures because of thermal lag. Although affected by ambient air temperatures, anticipated joint movement must be determined from anticipated concrete panel temperature extremes rather than ambient air temperature extremes.
2. **Sealant movement capability.** A sealant's performance within joints is rated as the allowable movement expressed as a percentage of the effective joint width. The minimum design width of a panel joint must take into account the total anticipated expansion and contraction movement of the joint and the movement capability of the sealant. This evaluation should include volume changes from creep, shrinkage, and temperature variations.

PCI Design Handbook supplies figures for estimating volume changes directly related to the size of the panel. Most drying shrinkage occurs in the first weeks following casting, and creep normally levels out after a period of months. For these reasons, movements caused by ambient air temperature variations are more important than those caused by shrinkage. For loadbearing panels, the effect of creep may be cumulative, thus may be more important.

Many factors may be involved in actual building joint movement. These include, but are not limited to, mass of material, color, insulation, building load, building settlement, method of fastening and location of fasteners, differential heating due to variable shading, thermal conductivity, differential thermal stress (bowing), building sway, and seismic effects. Material and construction tolerances that produce smaller joints than anticipated are of particular concern.

Tolerances in overall building width or length are normally accommodated in panel joints, making the overall building size tolerance an important joint consideration. Where a joint must match an architectural feature (such as a false joint), a large variation from the theoretical joint width may not be acceptable and tolerances for building lengths may need to be accommodated at the corner units.

A practical calculation of panel joint size can be made as follows, as shown in ASTM C1193 and C1472:

$$J = \frac{100A}{x} + B + C$$

where:

J = minimum joint width, in.

X = stated movement capability of the sealant, in percent

A = calculated movement of panel from thermal changes = (coefficient of thermal expansion) (change in temperature) (panel length)

B = material construction tolerances

C = seismic or other considerations as appropriate

Example: Concrete panels of 30 ft (9.1 m) in length, expecting a temperature change in the concrete of 60 °F (33 °C) from sealant installation temperature, with a material or construction tolerance of 0.25 in. (6 mm), are to be sealed with a sealant having ±50% movement capability (as determined by ASTM C719). The coefficient of thermal expansion of the concrete is 6×10^{-6} in./in./°F. The calculated movement of the panel from thermal change is as follows:

$$A = (6 \times 10^{-6}\ \text{in./in./°F})\ (60\ °F)\ (360\ \text{in.}) = 0.130\ \text{in.}\ (3\ \text{mm})$$

X = 50%

B = 0.25 in. (6 mm)

No seismic considerations, (C = 0).

The calculated minimum joint width is as follows:

$$J = \frac{(100)(0.130\ \text{in.})}{50} + 0.25\ \text{in.} = 0.51\ \text{in.}\ (13\ \text{mm})$$

To provide optimum quality for the installation and performance of sealants, the architect should specify a minimum panel joint width of not less than $^3/_4$ in. (19 mm). This is the minimum nominal joint width needed to adequately account for production and erection tolerances and still maintain an effective minimum joint width that can be caulked. The use of larger joints at reentrant corners and mitered panels at outside corners helps to relieve the possibility of impact between panels under large drifts in high seismic areas. It is also important that the joint between precast concrete panels and window frames also maintains the same nominal joint width. Corner joints may be $1^1/_4$ in. (30 mm) wide to accommodate the extra movement and bowing often experienced at this location. A minimum joint width of $^3/_4$ in. (19 mm) also is recommended for two stage joints to allow sufficient space for insertion of the interior seal with a 1 in. (25 mm) joint width recommended for insulated panels.

The required sealant depth is dependent on the sealant width at the time of application. The optimum sealant width/depth relationships are best determined by the sealant manufacturer, however, generally accepted guidelines are:

1. For joints designed for $^3/_4$ to 1 in. (19 to 25 mm) width: The sealant depth should be equal to one half the width. The sealant should have a concave shape providing greater thickness at the panel faces. The sealant should have a minimum $^1/_4$ in. (6 mm) contact with all bonding surfaces to ensure adequate surface adhesion.
2. For joints greater than 1 in. (25 mm) wide: Sealant depth should be limited to $^1/_2$ in. (13 mm) maximum, preferably $^3/_8$ in. (10 mm). For sealant widths exceeding 2 in. (50 mm), the depth should be determined by consultation with the sealant manufacturer.

The depth of the sealant should be controlled by using a suitable sealant backing material. To obtain the full benefit of a well-designed shape factor, the backing material must also function as a bondbreaker (Fig. 4.7.1). When it comes to sealant depth, more is not better. If too much sealant is applied, the stresses on the sealant bead are magnified and the chance of premature debonding at the precast concrete interface is increased. If the bead is too shallow, there may be insufficient material to accommodate the joint movement and the sealant will split.

4.7.7 Sealant Materials and Installation

The most common joint materials are sealants meeting ASTM C920. These sealants are used in both one-stage and two-stage joints. If used as an air seal, they may be applied from the front provided joint width and depth permit, or from the interior if access to the joint is not blocked by edge beams or columns.

Designers should consult with the various sealant suppliers to ensure they are specifying an appropriate sealant for the specific needs of the project, as well as the sealant's proper installation. For a comprehensive discussion of joint sealants used between wall panels, refer to ASTM C1193, *Standard Guide for Use of Building Sealants*. Table 4.7.1 provides a list of common sealants and their qualities. Non-staining joint sealants should be selected to prevent the possibility of bleeding and heavy dirt accumulation, which are common problems with sealants having high plasticizer contents. Also, care should be taken to avoid sealants that collect dirt as a result of very slow cure or long tack-free time. Dirt accumulation is more a function of specific product formulation rather than generic sealant type.

When specifying a sealant, a current sample warranty should be obtained from the manufacturer and the contents studied to avoid uncalculated risks. The warranty period for a polyurethane material can be up to 10 years, and up to 20 years for a silicone. This doesn't imply that the sealant will deteriorate during that time. Some polyurethane-based products maintain their appearance and integrity for more than 15 years. Warranties can be written to cover either the material or the material and the labor needed to replace them. The specifier should be familiar with the available sealants and associated warranties prior to selecting a sealant for the building.

The following characteristics should be considered when making the final selection of sealants from those with suitable physical (durability) and mechanical (movement capability) properties:

1. Adhesion to different surfaces—concrete, glass, or aluminum.
2. Surface preparation necessary to ensure satisfactory performance—priming, cleaning, and drying.
3. Serviceable temperature range.
4. Drying characteristics—dirt accumulation, susceptibility to damage due to movement of joint while sealant is curing.
5. Puncture, tear, and abrasion resistance.
6. Color and color retention.
7. Effect of weathering—water and ultraviolet (UV) light—on properties such as adhesion, cohesion, elasticity.
8. Staining of adjacent surfaces caused by sealant or primer.
9. Ease of application.
10. Environment in which the sealant is applied.
11. Compatibility with other sealants to be used on the job.
12. Long term durability.
13. Life expectancy.

The sealants used for specific purposes are often installed by different subcontractors. For example, the window subcontractor normally installs sealants around windows, whereas a different subcontractor typically installs sealants between panels. The designer must select and coordinate all of the sealants used on a project for chemical compatibility and adhesion to each other. In general, contact between different sealant types should be avoided by having

Table 4.7.1. Comparative Characteristics and Properties of Field-Molded Sealants.

	Polysulfides		Polyurethanes		Silicones	
	One-Component	Two-Component	One-Component	Two-Component	One-Component	Two-Component
Chief ingredients	Polysulfide polymers, activators, pigments, inert fillers, curing agents, nonvolatilizing plasticizers	Base: polysulfide polymers, activators, pigments, plasticizers, fillers Activator: accelerators, extenders, activators	Polyurethane prepolymer, filler pigments, plasticizers	Base: polyurethane prepolymer, filler pigments, plasticizers Activator: accelerators, extenders, activators	Siloxane polymer pigments: alcohol or other non-acid cure	Siloxane polymer pigments: alcohol or other non-acid cure
Primer required	Usually	Usually	Usually	Usually	Occasionally	Occasionally
Curing process	Chemical reaction with moisture in air and oxidation	Chemical reaction with curing agent	Chemical reaction with moisture in air	Chemical reaction with curing agent	Chemical reaction with moisture in air	Chemical reaction with curing agent
Tack-Free time, hr (ASTM C679)	24	36 – 48	24 – 36	24 – 72	1 – 2	$^1/_2$ – 5
Cure time, days[1]	7 – 14	7	7 – 14	3 – 5	7 – 14	4 – 7
Max. cured elongation (ASTM D412)	300%	600%	300%	500%	400 – 1600%	400 – 2000%
Recommended max. joint movement (ASTM C719)	± 25%	± 25%	± 15%	± 25%	± 25% to +100, - 50%	± $12^1/_2$% to ± 50%
Max. joint width, in.	$^3/_4$	1	1 ¼	2	3	3
Resistance to compression[2]	Moderate	Moderate	High	High	Low	Low
Resistance to extension[2]	Moderate	Moderate	Medium	Medium	Low	Low
Service temperature range, °F	– 40 to + 200	– 60 to + 200	– 40 to + 180	– 40 to + 180	– 60 to + 250	– 60 to + 250
Normal application temperature range, °F	+ 40 to + 120	+ 40 to + 120	+ 40 to + 120	+ 40 to + 120	– 20 to + 110	– 20 to + 110
Weather resistance	Good	Good	Very good	Very good	Excellent	Excellent
Ultra-Violet resistance, direct	Good	Good	Poor	Poor	Excellent	Excellent
Cut, tear, abrasion resistance	Good	Good	Excellent	Excellent	Good – excellent	Excellent – knotty tear
Life expectancy, years[3]	20	20	10 – 20	10 – 20	20	20
Hardness, Shore A (ASTM C661)	25 – 35	25 – 45	25 – 45	25 – 45	15 – 35	15 – 40
Applicable specifications (Canadian)	FS: TT-S-00230C ASTM C920 (19-GP-13A)	FS: TT-S-00227E ASTM C290 (19-GP-24) (19-GP-3B)	FS: TT-S-00230C ASTM C920 (19-GP-13)	FS: TT-S-00227E ASTM C920 (19-GP-24)	FS: TT-S-00230C FS-TT-S-001543A ASTM C920 (19-GP-18)	FS: TT-S-00227E USASI A-116.1 ASTM C920 (19-GP-19)

[1] Cure time, as well as pot life, are greatly affected by temperature and humidity. Low temperatures and low humidity create longer pot life and cure time; conversely, high temperatures and low humidity create shorter pot life and cure time. Typical examples of variations are:

Two-Part Polysulfide

Air temperature, °F	Pot life, hours	Initial cure, hours	Final cure, days
50	7–14	72	14
77	3–6	36	7
100	1–3	24	5

[2] Resistance to extension and compression is better known in technical terms as modulus, the unit stress required to produce a given strain. It is not constant but changes in values as the amount of elongation changes.

[3] Life expectancy is directly related to joint design, workmanship, and conditions imposed on any sealant. The length of time illustrated is based on joint design within the limitations outlined by the manufacturer, and good workmanship based on accepted field practices and average job conditions. A violation of any one of the above would shorten the life expectancy to a degree. A total disregard for all would render any sealant useless within a very short period of time. Note: °F = °C (1.8) + 32; 1 in. = 25.4 mm.

one sealant contractor do both panel and window sealant application with compatible materials.

The recommendations of the sealant manufacturer should always be followed regarding mixing, surface preparation, priming, application life, and application procedure. Good workmanship by qualified sealant applicators is the most important factor required for satisfactory performance. Sealant installation should be specified to meet at least the requirements of ASTM C1193.

Prior to sealant application, the edges of the precast concrete units and the adjacent materials must be sound, smooth, clean, and dry. They must also be free of frost, dust, laitance, or other contaminants that may affect adhesion, such as form release agents, retarders, or sealers. It may be more economical and effective to prepare joint surfaces prior to erection if a large number of units require surface preparation. It may also be desirable to conduct pre-project adhesion tests in accordance with ASTM C794, "Test Method for Adhesion-in-Peel of Elastomeric Joint Sealants," and field adhesion tests using ASTM C1521, "Standard Practice for Evaluating Adhesion of Installed Weatherproofing Sealant Joints," to determine the adhesion of the sealant with each contact surface. Adhesion (ASTM C794 or C1521) and stain testing (ASTM C510 or C1248) of the substrates and sealants in the early project planning stage of a building are recommended by most sealant manufacturers. This early testing will prevent most problems before they start and will give the construction team the assurance of a problem-free job.

Even when performed on a limited basis, inspecting sealants during installation significantly improves the probability they will be installed in accordance with the contract documents. Performing this evaluation early in the project provides a method for obtaining feedback on installation workmanship. This way, modifications or corrections can be implemented before any problem becomes widespread.

ASTM C1521 provides guidance for two tests. The first is non-destructive, and consists of applying pressure to the surface of the sealant at the center of the joint and the bond line with a probing tool. The second procedure involves removing sealant to evaluate adhesion and cohesion. The latter test offers tail and/or flap procedures, depending on whether similar or different substrates are present on adjacent surfaces of the sealant joint. The sealant pulled from the test area should be repaired by applying new sealant to the test area. Assuming good adhesion was obtained, use the same application procedure to repair the areas as was used to originally seal them. Care should be taken to ensure that the new sealant is in contact with the original sealant so that a good bond between the new and old sealants will be obtained.

ASTM C1521 can be used to evaluate installed sealant during mockups, at the start of work to confirm application methods, and throughout the work to confirm installation consistency. ASTM C1521 provides guidelines for the frequency of destructive testing when evaluation is part of a quality control program for a new installation. All results should be recorded, logged, and sent to the sealant applicator and manufacturer for warranty issuance.

In the construction of a mockup for water penetration testing, the actual field construction techniques must be used. If a leak develops, which usually occurs at the window to precast concrete interface, the details need to be examined and modified. Putting more sealant on to make the system pass the test is not realistic, as this will generally not occur during construction.

Sealants that chemically cure should not be applied to wet or icy surfaces, as they may cure or set before they can bond to the concrete surface. Some methyl methacrylate resin sealers inadvertently sprayed in the joints may peel away from the concrete surface, leaving a void between sealant and concrete. Silicone water repellents in the joints may prevent adhesion of sealants to the concrete surface. Therefore sealant/sealer compatibility should be verified. Abrasion cleaning using a stiff wire brush, light grinding, or sandblasting followed by air blowing may be necessary to remove surface contaminants. The sealant should be cured 14 days before applying water repellents. Care should be taken to caulk first, as sealer may prevent proper adhesion of sealant.

Also, before caulking, the joint may require solvent cleaning with a lint-free cloth dampened with an acceptable cleaning-grade solvent followed by wiping with a dry cloth. Isopropyl alcohol (IPA) is soluble in water and may be appropriate for winter cleaning, as it helps in removing condensation and frost by picking up surface moisture as it evaporates. Xylene and toluene are not soluble in water and may be better suited for warm weather cleaning. *Follow the solvent manufacturer's safe handling recommendations and local, state, and federal regulations regarding solvent usage.*

Sometimes, smooth concretes that are very shiny exhibit a "skin" on the surface. The skin may peel off, leaving a gap between it and the concrete after the joint sealant has been applied to the concrete. It may be necessary to remove the

skin by using a stiff wire brush followed by a high-pressure water rinse. The joint must be dry before applying the sealant. Wet concrete should be allowed to dry for at least 24 hours, under good drying conditions, before applying sealant or primer.

The caulking gun should have a nozzle of proper size and should provide sufficient pressure to completely fill the joints. An extension for the nozzle of the caulking gun and a longer tool for tooling the inner seal of a two-stage joint are necessary. Joint filling should be done carefully and completely, by thoroughly working the sealant into the joint. Under-filling of joints normally leads to adhesion loss. After joints have been completely filled, they should be neatly tooled to eliminate air pockets or voids, and to provide a smooth, neat-appearing finish. Tooling also provides a slightly concave joint surface that improves the sealant configuration and achieves a visually satisfactory finish. Joint tooling should be performed within the allowable time limit for the particular sealant. The surface of the sealant should be a full, smooth bead, free of ridges, wrinkles, sags, air pockets, and embedded impurities.

Large daily temperature swings during curing (warm days, cold nights) may cause adhesive failure. A practical range of installation temperatures, considering moisture condensation or frost formation on joint edges at low temperatures and reduced working life at high temperatures, is from 40 to 80 °F (5 to 27 °C). This temperature range should be assumed in determining the anticipated amount of joint movement in the design of joints. A warning note should be included on the plans that, if sealing must take place for any reason at temperatures above or below the specified range, a wider-than-specified joint may have to be formed. Alternately, changes in the type of sealant to one of greater movement capability or modifications to the depth-to-width ratio may be required to secure greater extensibility. The applicator should know the joint size limitation of the sealant selected.

When it is necessary to apply sealant below 40 °F (5 °C), steps must be taken to ensure clean, dry, frost-free surfaces. The area to be sealed should be wiped with a quick-drying solvent that is slightly water soluble, such as IPA, just before sealing. The area may be heated, if possible, or at least the sealant should be slightly warm (60 to 80 °F [15 to 27 °C]) when applied.

It is recommended that tools be used dry. Tooling solutions such as water, soaps, oil, or alcohols should not be used unless specifically approved by the sealant manufacturer as they may interfere with sealant cure and adhesion and create aesthetic issues.

It is imperative that uncured silicone or polyurethane sealants are not allowed to contact non-abradable surfaces such as polished stone, metal, or glass. These surfaces must be masked or extreme care taken to prevent any contact with the sealant during the application process. Excess sealant cannot be completely removed with organic or chlorinated solvents. Once an uncured sealant comes in contact with an exposed surface it will leave a film that may change the aesthetic or hydrophobic surface characteristics of the substrate.

Surfaces soiled with sealant materials should be cleaned as work progresses; removal is likely to be difficult after the sealant has cured. A solvent or cleaning agent recommended by the sealant manufacturer should be used.

Sealant Backing. For sealants to perform to their optimum movement parameters, they must adhere only to the joint sides and never to the base. Closed-cell expanded polyethylene, or non-gassing polyolefin sealant backing are the recommended backing materials for horizontal and vertical joints. For two-stage joints, open-cell polyurethane backing should be used on the interior seal unless the interior seal is allowed to cure for seven days before installing the exterior seal. Proper selection and use of backing material is essential for the satisfactory performance of watertight joints. When selecting a backing material and/or bond breaker, the recommendations of the sealant manufacturer should be followed to ensure compatibility with the sealant.

The principal functions of sealant backing materials are:

1. Controlling the depth and shape of the sealant in the joint (proper width to depth ratio). Also, profiles the rear surface to an efficient cross-section for resisting tensile forces.
2. Serving as a bondbreaker to prevent the sealant from adhering to the back of the joint. The sealant must adhere only to the two surfaces to which it bridges. If it also adheres to the back of the joint (three-sided adhesion), the stresses on the sealant bead are greatly increased and this increases the likelihood of premature sealant failure.
3. Assisting in tooling of the joint by providing back pressure when tooling. The combination of tooling and back pressure ensures full-sealant contact with the sides of the joint, which is vital if proper adhesion is to take place.
4. Protecting the back side of the sealant from attack by

moisture vapors trying to escape from the building. Use of two-stage joints and backing is recommended where high vapor pressure occurs at the immediate back surface of the sealant.

The backing should not stain the sealant, as this may bleed through and cause discoloration of the joint. Sealant backing materials should be of suitable size and shape so that, after installation, they are compressed 25 to 50%. Compression differs with open- and closed-cell rods; refer to manufacturer's recommendations. Adequate compression is necessary so that the shape will stay in the opening and not be dislodged or moved by sealant installation.

Primers. Some sealants require primers on all substrates; others require primer for specific substrates or none at all. Absence of a required primer will cause premature sealant adhesion failure. A primer often helps sealant adhesion in cold weather. Primers are recommended by the sealant manufacturer for the following reasons:

1. To enhance adhesion of sealants to porous surfaces, such as concrete, or to reinforce the surface.
2. To promote adhesion of sealants to surfaces such as porcelain enamel, unusual types of glass, certain metals and finishes, and wood.
3. To promote adhesion of sealants to an existing surface treatment which is difficult to remove.

Special care should be exercised to avoid staining the visible face of the precast concrete unit because some primers leave an amber-colored stain if brushed along the surface. This stain will have to be mechanically removed, which will be expensive. The primer should be allowed to cure before application of the sealant. Sealant must be applied the same day the surfaces are primed. The sealant and primer should always be supplied by the same manufacturer.

4.7.8 Architectural Treatment

Joints should be expressed as a strong visual feature of architectural wall design. False joint lines can also add to the visual effect. Recessing of joints and/or sealants will help diminish the visual impact of possible variations between adjacent surfaces sometimes inherent in large wall panels. Setting the sealant back from the face of the panel also gives some protection from UV light to minimize deterioration. By recessing the joints, the sideways flow of wind-driven rain over the sealant is reduced. Complicated edge and fenestration profiles should be avoided for economy in manufacturing and erection. Complicated profiles are more vulnerable to damage in handling and more difficult to make watertight.

Joints are important features in creating weathering patterns. Vertical joints help in channeling water, provided the joint is not pointed flush with a sealant or gasket. The concentration of water at such joints requires careful detailing to prevent moisture penetration.

Listed are detailing suggestions for typical architectural precast concrete panel joints (see Fig. 4.7.5, page 369).

1. Allow either a chamfered or reveal joint because these types of joints can accommodate the tolerances required for panel thickness, and the shadows formed within these joints will minimize any adverse effects on the aesthetic appearance of the joint system. By making the joints appear wider than they actually are, the visual differences in their width are proportionately reduced. This tends to make differences more difficult to detect and masks slight misalignments of the joints that might otherwise be especially noticeable at intersections. Simplifying the profile of the joints by providing a reasonable radius (chamfering) the panel edges assists in sealant installation and also has the obvious advantage of making the edges less vulnerable to chipping. Chips disrupt water flow and concentrate dirt.
2. Avoid the use of butt joints without a radiused or chamfered edge, as the tolerance variations in surface plane may result in the formation of unwanted shadow lines directly over the panels rather than within the joint area. This may impair the aesthetic appearance of the panel assembly.

Listed are detailing suggestions for staggering architectural precast concrete wall panels (Fig. 4.7.7).

1. Check for excessive thermal bowing of panels and set panel tolerances to avoid unwanted shadow lines at certain times of the day.
2. Consider joint configuration and joint tolerances to minimize unwanted shadow effects.
3. For loadbearing walls, there is a serious drawback to using horizontally staggered panels. If staggered panels are used, the floor slab must bear on two different panels on every other floor. The floor slab connection problem created should be avoided, if at all possible.

Finish requirements may also influence joint details. The sealant must be applied to a relatively smooth surface as it is difficult to tool the sealant to achieve intimate contact with an irregular surface. Thus, the sealant must be held

back 1/2 in. (13 mm) from the edge of exposed aggregate and that portion of the matrix along the joint should present a smooth, clean surface for the application of the sealant (see Section 5.2.1). This requirement is simple to comply with when the design includes recessed external joints (Fig. 4.7.5). When exposed aggregate surfaces come together at an inside corner, the situation is more difficult. Special attention must be paid to surface finish and joint details. Also, for maximum performance, sealants should not be applied to beveled or chamfered surfaces, but should be applied beyond the beveled area.

4.7.9 Fire-Protective Treatment

Joints between wall panels are similar to openings. Most building codes do not require openings to be protected against fire if the openings constitute only a small percentage of the wall area and if the spatial separation is greater than some code minimum distance. In such cases, the joints would not require protection. In other cases, openings, including joints, may have to be protected for fire resistance. Where no openings are permitted, the fire resistance required for the wall should be provided at the joints.

Fire tests of wall panel joints have shown that the fire endurance, as determined by a temperature rise of 325 °F (163 °C) over the unexposed joint, is influenced by joint type, joint treatment (materials), joint width, and panel thickness.

When required for fire rating, joints between wall panels should be detailed to prevent the passage of flames and hot gases. Details should ensure that the transmission of heat through the joints does not exceed the limits specified in ASTM E119 *Standard Methods of Fire Tests of Building Construction and Materials.* Concrete wall panels expand when heated, so the joints tend to close during fire exposure. By providing the proper thickness of insulating materials within the joint, it is possible to attain fire endurances essentially equal to those of the panels. Flexible, noncombustible materials, such as ceramic fiber blankets, provide thermal, flame, and smoke barriers. These fire resistive blankets and ropes must be installed with a minimum of 10 to 15% compression. When used in conjunction with caulking materials, they can provide the necessary fire protection and weathertightness while permitting normal volume change movements. Joints that do not require movement can be filled with mortar.

Figures 4.7.8 and 4.7.9 show the fire endurance of one-stage joints in which the joint treatment consisted of sealants and polyethylene backer rods.

Table 4.7.2 is based on results of fire tests of panels with one-stage joints and ceramic fiber felt in the joints. The tabulated values apply to one-stage joints and are conservative for two-stage joints. Fire-resisting silicone sealants can provide fire ratings, if required. For high ratings, fire-retardant joint filler materials may also be required.

Fig. 4.7.8 Fire endurance of one-stage joints.

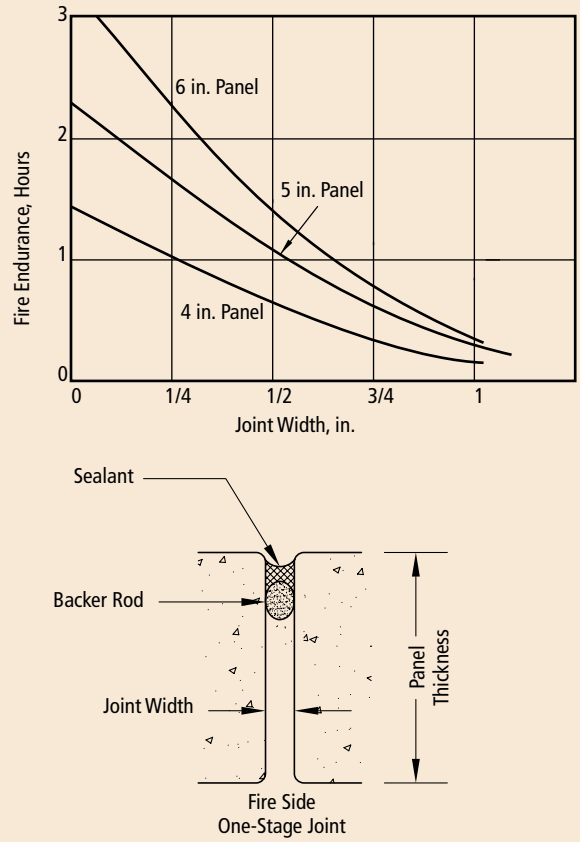

4.7.10 Joints in Special Locations

Below-grade joints between panels and the foundation require special attention. Good site drainage is essential for long-term waterproofing. A perforated drain tile should be placed below the top elevation of the floor slab. The top of the drain should be covered or encased with a filter fabric. The amount of coarse aggregate and its placement depend on soil type, amount of groundwater expected, and depth of the foundation. Where possible, slope the drain at least 1/8 in./ ft (3 mm/300 mm), and close off the end with wire mesh to keep rodents out. The discharge from drains should be carried away from the foundation.

Specifying the proper backfill density for compacted soil (between 85 and 88% on the Modified Proctor Density scale) is extremely important. Density above 88% can in-

duce stress on the walls and impede drainage; density below 85% can result in some settlement.

Fig. 4.7.9 Exterior joint sealing configurations and fire ratings (per UL 263).

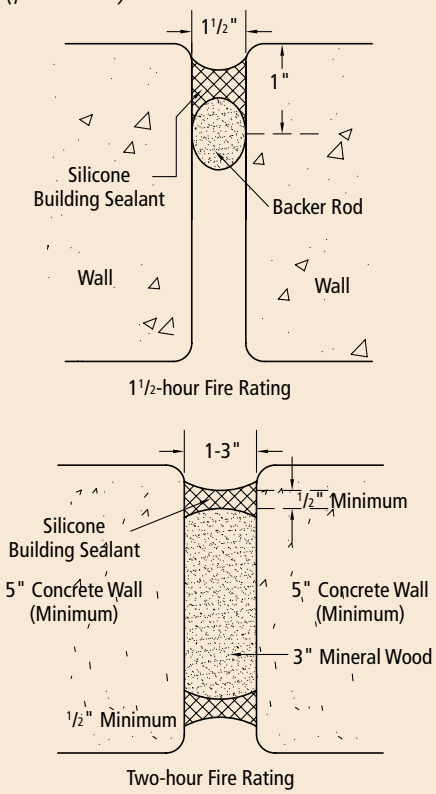

The joint at the interface of the panel and foundation is typically grouted and the grout is raked out on the earth side and a backing material and sealant are installed. Due to large variations in cast-in-place concrete foundations, a minimum 1 in. (25 mm) joint is recommended at this interface. Damp-proofing materials may be used in the absence of hydrostatic pressure to resist the capillary action of moisture. Damp-proofing should be stopped below grade because, if exposed above a receding grade, it becomes a visible black line.

The amount of hydrostatic pressure expected in a building application also can be critical in material selection. For most buildings, hydrostatic pressure around the foundation is not a crucial factor, particularly if tile drains are installed and working properly.

However, a thorough analysis of groundwater levels and soil percolation rates surrounding the site should be made before deciding on the use of damp-proofing in lieu of waterproofing.

The joint between foundation panels should be caulked and then covered with a sheet waterproofing membrane, 20 to 120 mils (0.50 to 3 mm) thick. The entire foundation wall should then be covered with a sheet waterproofing membrane and an asphaltic protection board or grooved extruded polystyrene board with applied geotextile fabric.

Table 4.7.2 Protection of joints between wall panels utilizing ceramic fiber felt.

Panel Thickness* (in.)	Thickness of ceramic fiber felt (in.) required for fire resistance ratings and joint widths shown							
	Joint width = 3/8 in.				Joint width = 1 in.			
	1 hr	2 hr	3 hr	4 hr	1 hr	2 hr	3 hr	4 hr
4	1/4	N.A.	N.A.	N.A.	3/4	N.A.	N.A.	N.A.
5	0	3/4	N.A.	N.A.	1/2	2 1/8	N.A.	N.A.
6	0	0	1 1/8	N.A.	1/4	1 1/4	3 1/2	N.A.
7	0	0	0	1	1/4	7/8	2	3 3/4

N.A. = Not applicable

** Panel equivalent thicknesses are for carbonate concrete. For siliceous aggregate concrete change "4, 5, 6, and 7" to "4.3, 5.3, 6.5, and 7.5". For sand-lightweight concrete change "4, 5, 6, and 7" to "3.3, 4.1, 4.9, and 5.7"*

The tabulated values apply to one-stage joints and are conservative for two stage joints. Interpolation may be used for joint widths between 3/8 in. and 1 in.

Note: 1 in. = 25.4 mm.

Fig. 4.7.10

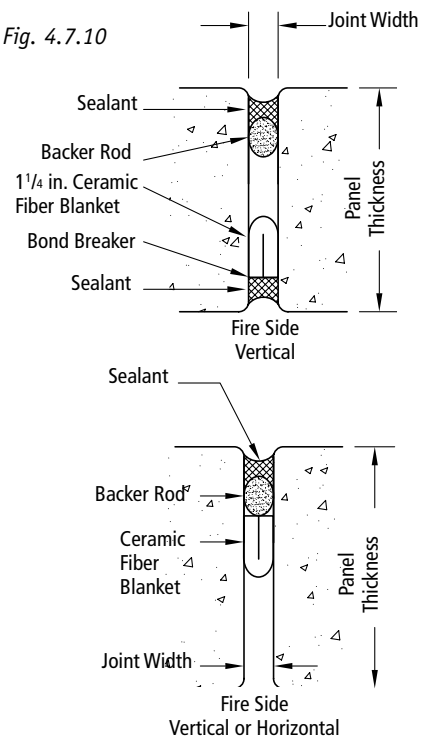

The Paramount,
Architect: Elkus Manfredi Architects, Ltd., Design Architect; Kwan Hemmi Architects and Planners, Architect of Record.

St. Regis Museum Tower,
Architect: Skidmore, Owings & Merrill, LLP.;

Photo: Mark Schwettmann.

San Francisco Museum of Modern Art, San Francisco, California; Architect: Mario Botta, Design Architect; Hellmuth, Obata & Kassabaum, P.C. Architect of Record.

CHAPTER FIVE
OTHER ARCHITECTURAL DESIGN CONSIDERATIONS

5.1 GENERAL

Architectural precast concrete may be in contact with many other materials under service conditions. Because the application or interfacing of such materials can be as important as the design of the individual components, this chapter discusses various types and properties of interfaces, including glazing, energy conservation and condensation control, acoustical properties, fire and blast resistance, and roofing. Joints between precast concrete panels and other systems or materials must be designed to maintain continuity of the thermal, air, and moisture control functions in order to provide continuity for the wall. The combination of building materials selected must provide an aesthetically pleasing facade while effectively separating the external and internal building environments. A building envelope is composed of the architectural precast concrete panels, joints, and other building materials discussed in this chapter.

5.2 WINDOWS AND GLAZING

5.2.1 Design Considerations

For the architect, windows interrupt wall systems and require special detailing at their interface with the opaque cladding system. Windows are locations where many dissimilar materials and different trades have to interface.

Windows also affect the indoor environment because their thermal and optical characteristics, size, orientation, ability to be opened, and treatment with shading devices have an impact on the comfort of occupants and the operation of mechanical systems. Glare, overheating and cooling effects, drafts, and outside noise affect the physical comfort of occupants, while their psychological comfort can also be affected by communication—or lack of it—with the outside world. How much glazing, what type, and where to place it to satisfy the occupants should be accounted for in the evaluation of design options.

The fenestration industry has established guidelines for bow, squareness, corner offset in window framing, and variation of mullions from plumb or horizontals from level:

1. Bow: $^1/_{16}$ in. (1.6 mm) in any 4 ft (1.2 m) length of framing.
2. Squareness: max. $^1/_8$ in. (3.2 mm) difference in the lengths of the diagonals of the frame.
3. Corner offset: $^1/_{32}$ in. (0.8 mm) at each corner.
4. Plumb or level: $^1/_8$ in. (3.2 mm) in 12 ft (3.7 m) or $^1/_4$ in. (6.3 mm) in any single run.

The fenestration industry has also established guidelines for the allowable deflection of glass framing members under design loads. The intention of the guidelines is to minimize the potential for glass breakage. They state that the glass surround should not impose any bending or highly concentrated compressive loads on the glass and that the framing should not deflect more than $^3/_4$ in. (19 mm) or $^1/_{175}$ th of its span under loading, whichever is less. The guidelines also require that the glazing system chosen should isolate the glass from the other parts of the wall. The glazing option selected should relate to realistic and attainable tolerances for the precast concrete (see Section 4.6). For example, erection of spandrel panels requires close attention to tolerances because the window system must fit between the upper and lower concrete spandrel panels.

Connection of the window to the rough opening in a precast concrete wall must be designed to resist wind, seismic, blast, vertical live load, and thermal loads and to transfer loads into the surrounding framing.

The interfacing between windows and precast concrete panels is fairly simple in the case of closed shapes, where the window is framed within a single panel. In this case, connections and joint details are independent of site conditions and tolerances are governed only by tolerances related to the manufacturing for the two products (Fig. 5.2.1). In the case of open units and spandrel panels, the interfacing of windows in the façade must allow for slightly larger and more uncertain site construction tolerances. Where window openings occur between such units, glazing can best be accommodated by a window frame, that considers the appropriate size and squareness tolerances of the opening. Preferably, windows should be located entirely within a single panel. Failure of the joint where the window frame crosses the joint will result in water being directed into the window head. A precast concrete piece that fully contains the window opening makes the most economical wall unit.

Fig. 5.2.1 Open and closed units.

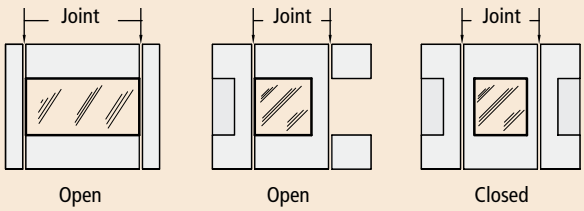

It is important that panel-to-window connections for open units and spandrels allow for minor movements of the panels in relation to the supporting structure and in the joints between the concrete and window frame. Consideration should be given to the effect of gravity and seismic deflections and rotations of the spandrel on the windows. In the case of closed panels, the movements are accommodated in the joints between the concrete units.

One or two lines of sealant can be used as the means of providing a watertight joint between the window and the precast concrete wall. The window joints at the precast concrete panel interface have leaked due to unsatisfactory surface preparation or improper sealant selection leading to cohesion or adhesion failure. Leakage has led to moisture damage to ceilings, floor and wall finishes and structural elements and reduced the insulating capacity of wall insulation attached to the back of the precast concrete panel. Using an appropriate water penetration test as part of the testing program for the mockups and installed window units, along with proper detailing and installation procedures, helps protect against water leakage problems in service.

In the design of the building façade, there are practices that can be considered that have a proven history of deterring leakage at windows. These basic design practices are often overlooked, or their effectiveness underestimated. Some of these practices include:

- Roof overhangs or cornices – These features can reduce direct exposure to rain. Effectiveness relates to the degree of overhang protection, site exposure, and other factors.
- Drips – Incorporated into panels they can shed water away from window joints, glazing, and seals.
- Recess the window – Even a small degree of recess into the wall plane affords some protection from exposure of rain water running down the face of the building.
- Slope sills – Slope sills away from windows. Avoid creating horizontal or back-sloping surfaces that will allow water and snow to collect at sills.

It is important to detail the extent and location of precast concrete finishes in the contract documents, particularly when an exposed aggregate or washed texture is indicated. The reason being the difficulty in achieving a satisfactory face seal of the window frame to exposed aggregate. Pin holes at the sealant bond line will be created by the irregular exposed aggregate surfaces since the sealant cannot be effectively tooled and consolidated. The most effective means to avoid pinholing is to hold the texturing back a minimum of $^1/_2$ in. (13 mm) from the precast concrete and window frame interface. Light sandblast, acid-etch, and other smooth textures are less problematic because a suitable and continuous bond to the precast concrete can be achieved by the sealant.

The specifier should also ensure compatible sealants are used between the precast concrete and window systems. One means is to specify installation of all exterior wall sealants by a single sealant applicator. Often, a joint sealing system shows a lack of continuity by failing to include the window perimeter. The interface of the two systems requires a "marriage" bead of sealant where the vertical precast concrete joint sealant meets the horizontal window sealant.

Water drips. Surface tension allows water to flow along the underside of horizontal surfaces. If no drip devices or projections are provided on a building face, run-off water can flow over the wall materials and windows for the total height of the building. Dirt may be deposited in sufficient quantities to cause stains on wall units and, in a short period, may streak and stain glass (Fig. 5.2.2) (see Section 5.2.4). Water always runs down a wall or window over the same preferential paths. Window heads should be designed so they don't splay down and back toward the glass, unless drip details are incorporated into the frame. Water drips will minimize streaking due to uneven washing of a backward-sloping surface when the drips are correctly dimensioned and placed close to the forward edge. When placed under outward-sloping heads or sills, drips will reduce streaking on the vertical surfaces below. These drips also prevent water (after a storm) from slowly running over the window glass, a primary cause of glass streak-

Fig. 5.2.2

ing. Water will leave a drip at its lowest point and it is important to follow its course thereafter. Small chips and cracks in the building surface may concentrate the flow, so that water will bridge drip details and allow wetting of the surface below. If particulate laden water falls onto other surfaces, the problem may be merely relocated. However, if the wind tends to spread the water out on the surface below, uniformity of weathering may be obtained. To avoid streaks on the sides of window panels, the drip may be stopped about 2 in. (50 mm) short of the window sides (Fig. 5.2.3). Often recesses or grooves may be incorporated in the side walls to further direct the water. Water flow should be evenly distributed on wall surfaces.

The drip section should be designed in relation to the slope of the concrete surface (Fig. 5.2.4) to prevent water from bridging the drip. To avoid chipping, the drip should not be located closer than $1^1/_2$ in. (38 mm) to the edge of the precast concrete unit. Where the window is not 2 in. (50 mm) or more back from the face of the panel, it is difficult to get a drip groove in the panel.

Fig. 5.2.3 Straight water drip.

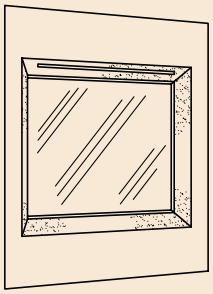

A clear sealant bead applied to precast concrete units after erection, or plastic drips glued to the concrete, are remedial drip solutions used with varying success depending on their care in application. A drip incorporated initially into the precast concrete or window frame is the least-costly and best solution. Figures 5.2.5(a) and (b) show the use of an extrusion [either aluminum or neoprene across the head of the window which have either an integral gutter or extended drip lip of at least 1 in. (25 mm)].

Fig. 5.2.4 Design of water drip in relation to slope.

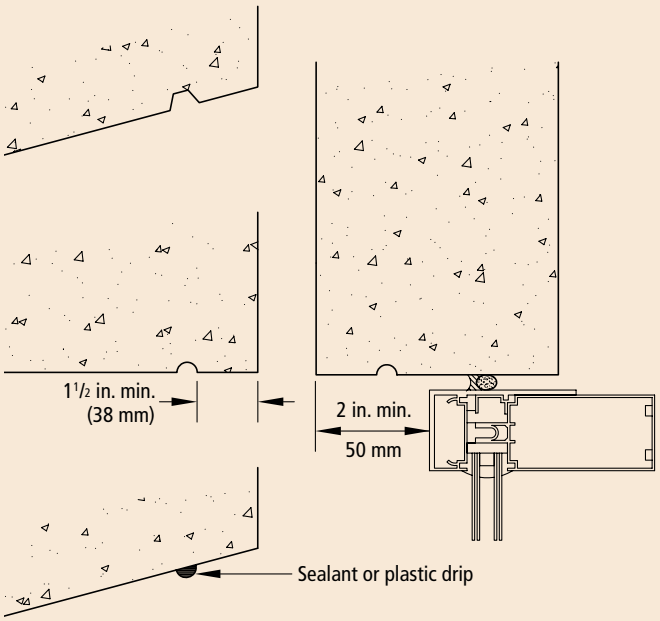

Flashing. One-stage (face-sealed) sealant joints, which are most common, two-stage joints, or flashing may be used to prevent moisture intrusion. Flashing is not used in most regions of the United States. Its use is dependent on the design of the window system, design wind pressure, and expected annual precipitation. Improperly detailed and installed flashing may cause water leakage problems.

Weep Holes. The glazing guidelines published by most major window associations recommend incorporating weep holes at the sill of the glazing pocket for the control and management of infiltrating water and

Fig. 5.2.5 Gutter or drip incorporated in drip section.

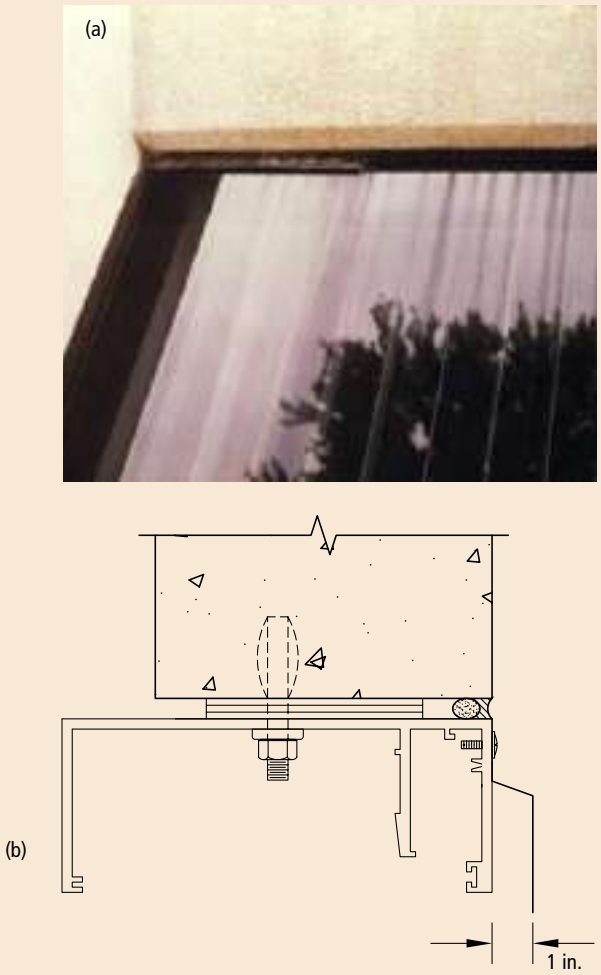

condensation. The need for weep holes is a function of how the system is designed. Modifying pretested window systems solely to add weep holes is not recommended. Unless the window system is designed properly, weep holes can be a source of water intrusion and increased air infiltration.

Window Frame Location and Detailing. Special consideration should be given to the relationship between window frames and architectural features, such as reveals and projecting elements on a precast concrete panel. For example, window installers discourage aligning the frame's exterior with a series of reveals. A design that ensures installation success features window returns that create a smooth surface against which the installer can set and plumb the frames. Panels incorporating punched openings produce more accurate opening sizes than ribbon windows created by a column and spandrel system. This can be an important factor if the glass units are preordered.

Window openings can be provided in architectural precast concrete panels with ease, in any shape or size desired, offering the architect total flexibility in design. Panels may contain a single opening or a series of windows. They can be one-story high and made as wide as possible or cast narrower to span vertically for two floors. However, achieving design and cost efficiency requires thoughtful panel system configuration. In all cases, a reasonable slope must be maintained on the return edges of openings to ensure sufficient draft, usually 1:6, to strip the unit out of the mold. Mold costs are directly related to the complexity of the window wall panel. Punched flat panels add moderate costs, whereas the molds for heavily sculptured panels can be expensive. As always with precast concrete, repetition of components reduces unit costs.

The designer should consider window wall panels that:

- Promote the use of a master mold.
- Offer flat or heavily sculptured profiles.
- Provide curved surfaces.
- Work as corner units.
- Incorporate a bullnose, cornice, or reveals.

Openings in walls that form the windows of a building help to break up large flat surfaces, but may contribute weathering problems. Individual windows in a wall made of architectural precast concrete must be designed with two principles in mind: (1) to contain the water flow within the window area, and (2) to disperse it at the bottom of the window in such a manner that it is spread not concentrated.

Glass areas cause build-up of water flow. Typically on nonabsorbent materials, water flows in discrete streams rather than as a continuous film. This is due to surface tension that causes the droplets of water to converge.

Sills should have a minimum slope of 2% to ensure water flow away from the interior of the structure and minimize dirt accumulation. A drip groove should be provided under any outward-sloping sills to prevent particulate laden water stains on the wall panels. Because window surfaces are impervious, a large amount of the water and pollutants that collect on

windows are flushed over the sills, the very thing the designer must guard against if differential patterning is to be avoided. In most cases, sills should be designed to allow rainwater to pass over windows, sills, and spandrels as evenly and freely as possible. By contrast, rainwater flowing down an adjacent precast concrete wall surface will be slower (depending on the surface texture and absorption of the concrete) and its throw-off will be less complete. As a result, a concentration of water forms at the bottom of each window, which

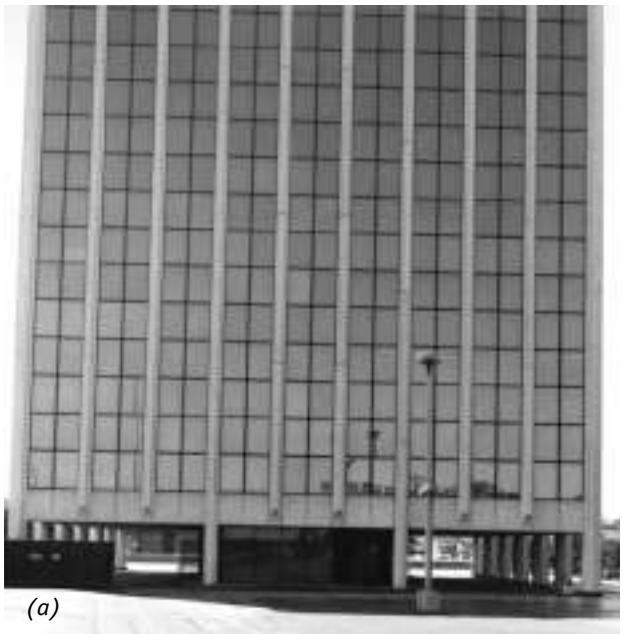

Fig. 5.2.6(a) & (b)Water flow over glass depositing dirt.

Fig. 5.2.7 Window treatments.

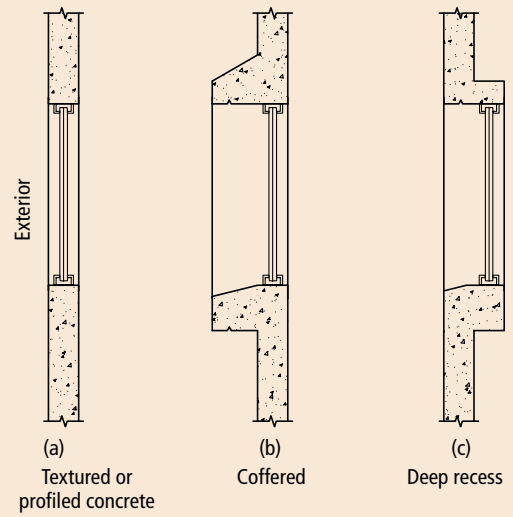

may cause differential patterning. This flow must be dissipated, breaking up its concentration. Furthermore, there is always a tendency for more water flow at the edges of the glass or at the mullions than in its center. This effect is due to small amounts of negative wind forces which tend to drive rain toward the edges of the glass. Figures 5.2.6(a) and (b) shows the dirt pattern caused by water run-off carrying the dirt down the mullion. Grooves were cut under the mullions (Fig. 5.2.6[a]) in an attempt to minimize staining after the panels were in place.

There are many different ways of detailing windows, depending to some extent on their shape and the degree to which they interrupt water flow (Fig. 5.2.7). Many recent buildings have used precast concrete spandrel panels and windows in approximately the same plane, without sill ledges or projections, and the panels have weathered well without staining. This method seems to perform best when the concrete below the window is textured or profiled (for example, with vertical ribs) to break up the water flow and avoid streaking. Darker color finishes are also desirable in urban areas. The path of water flow must be anticipated and provision made to collect and drain away the water in due course. See Section 3.6 for a discussion on weathering problems.

Important design considerations are the details for handling of water directed to the base of a window or glass curtain wall. If the water volume is considerable (tall sections of glass) and the glass is not kept clean,

a large volume of particulate water will be directed to the sill and then the precast concrete panel surface. The dirt is more noticeable if the under-window panels are made with light-colored concrete. Ideally detailing should be such that water flow from the base of a window is thrown clear of the building, by setting the precast concrete wall behind the line of the mullions and curtain wall sill. As alternatives, water may be made to flow in rustications in line with the mullions for the glass. Shadows on rustications usually help mask streaks, particularly when the recessed depth is equal to or greater than the recess width.

5.2.2 Window Installation

Precast concrete panels occasionally are pre-glazed in the precaster's plant (Fig. 5.2.8). In the project shown, the precaster and glass subcontractor coordinated operations to pre-glaze the punched window panels. On a just-in-time basis, panel loads were shuttled to the glass subcontractor where the glass was installed on the panels–right on the delivery trailer. When glazing was completed, the loads were re-delivered to the jobsite for erection on a 42-story tower. During the whole operation, including erection, only one or two panes were lost. Pre-glazing the precast concrete panels offered significant cost and schedule savings on this project.

However, the typical method of window frame attachment is field installment. This is accomplished with expansion anchors in the edge or back vertical face of the panel. Location for window attachments should be coordinated with the precaster to avoid interference with reinforcing steel or prestressing tendons. Proper edge distance for the anchors must be used. Impact type anchors should never be used.

Hardware can also be installed in the precast concrete units to provide fastening for the windows and may consist of ferrule loop inserts, tubes or slotted inserts.

Several methods are commonly used to attach windows to precast concrete panels. In precast concrete sandwich wall panels, the window frame should be attached to the inside wythe, since movement of the inside wythe is less than the exterior wythe. Window frames should have thermal barriers between the exterior frame and the interior frame. A substantial part of the total heat loss through a window can occur through its frame. Windows require careful detailing at their interface with the wall. Consideration needs to be given to: (1) mechanical connection of the window frame to concrete panel; (2) estimation of joint movement for proper selection of sealing materials; (3) watertightness; (4) airtightness; (5) flashings, rain deflectors, and drainage of infiltrated water; and (6) condensation.

Figures 5.2.9(a) through (f) show several examples of aluminum frames attached to precast concrete panels. Figure 5.2.10 shows 7 ft 3 in.-high (2.2 m) loadbearing spandrel panels with butt-glazed insulated glass and spandrel glass partially covering the spandrel panels.

The GC/CM must coordinate the supply of window hardware that is typically embedded in the precast concrete. This hardware is frequently furnished directly to the precast concrete plant by the window supplier.

If ferrous metal inserts are used for aluminum windows, they should be galvanized, coated with two coats of bituminous paint or zinc-rich primer. Depending on the finish of the aluminum, plastic washers may have to be used to prevent contact between the steel and the aluminum to prevent possible corrosion.

Where windows are installed using a two-stage joint, it may be necessary to vent the air space between the rain-barrier and the airseal (refer to Section 4.7.2). The amount of water to be drained should normally be minimal so that ice lensing or damming problems will not occur, provided the outlet is protected with a baffled vent or weep tube.

Untested window frame to precast concrete assemblies should be mocked up and water tested in accordance with ASTM E 331 during the initial precast concrete production stages. This allows any necessary corrective action to be taken at the earliest possible time. It is important to coordinate the window sealant system with the adjacent precast concrete panel sealant system.

Fig. 5.2.8 Pre-glazing of panels.

Fig. 5.2.9 Window attachment details.

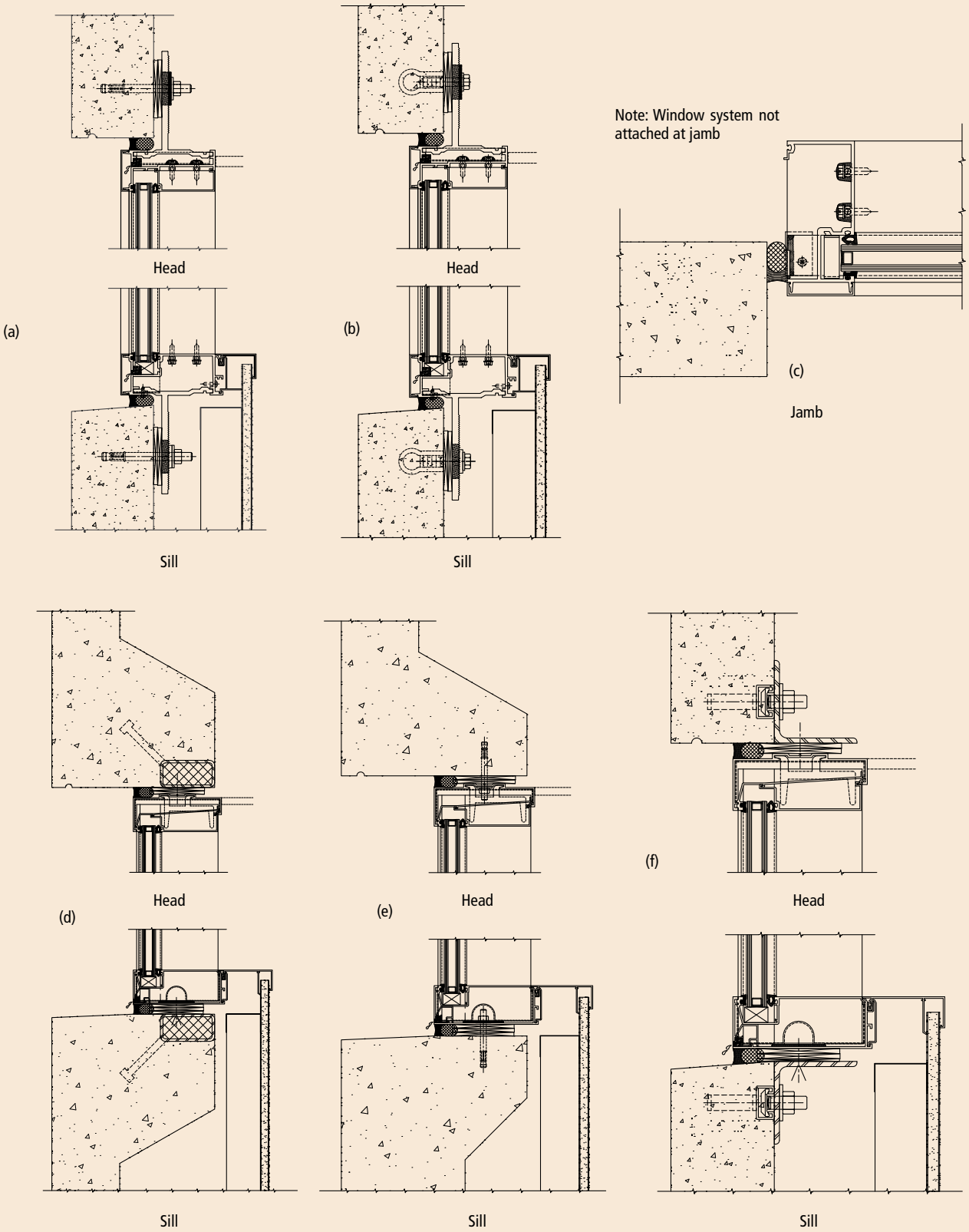

Fig. 5.2.10 Loadbearing spandrels partially covered with glass.

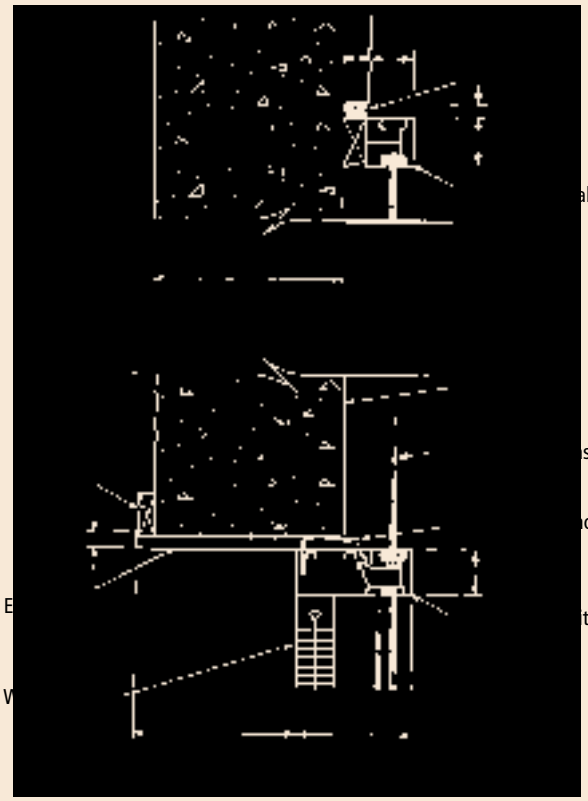

Window Frame Location. When possible, it is preferable to locate the window frame 2 in. (50 mm) or more from the exterior face of the panel. This helps reduce the chance of glass staining by providing space for a drip and allows lifting devices to be concealed beneath the window frame. As window frames are punched back in the opening return consideration must be given to achieving the return finishes.

It is recommended that the architect specify, as part of the glazing contract, that the window manufacturer install window(s) for approval in the initial production panel or previously approved mockup units. This practice often proves advantageous because it affords the architect and the owner an opportunity to assess the appearance of the finished wall assembly and to approve all details relating to the assembly such as color and type of sealant and interior trim. The mockup sample may also allow subcontractors to pinpoint problems before large numbers of elements are affected. This provision is a worthwhile safeguard against later delays in the enclosure of the building.

5.2.3 Other Attached or Incorporated Materials

Other materials incorporated into the precast concrete units might include inserts or hardware used to attach other materials, reglets used to accommodate flashings, nailing strips, or similar continuous fastening strips. Materials which react with concrete should not be used. For example, metals such as copper, zinc, aluminum and lead, and alloys containing these metals may corrode when in concrete. If their use is unavoidable, they must be suitably protected with dielectric separation materials. Galvanized and stainless steel and plastics are acceptable without dielectric separation but, as indicated in Section 3.6.3, the weathering effects of these and other metals should be considered. Also, flashings must be galvanically compatible with the reglets or counterflashing receivers.

There has been great progress in window-washing systems. More sophisticated safety equipment has been designed into the systems and more flexibility has been given to the designer of the wall.

Window-washing tiebacks prevent the window-washing scaffold from swaying or separating from the wall (Fig. 5.2.11) and lend themselves to designs that are flush, with no projections in the façade.

It is extremely important for the architect to locate attached or incorporated materials on the Contract Drawings and clearly indicate the supplier and installer of these materials in the specifications.

Fig. 5.2.11 Tieback.

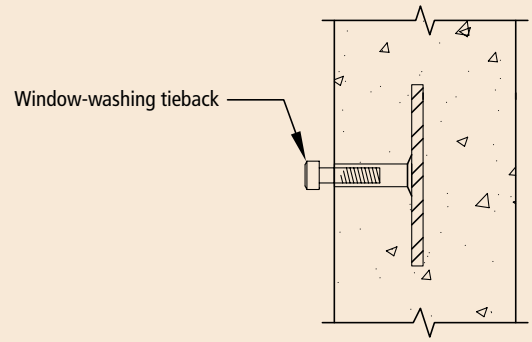

5.2.4 Glass Staining or Etching

Glass corrosion is a gradual wearing away of the glass by chemical action. Corrosion may occur when any of a variety of compounds, such as cleaning solutions containing ammonium bifluoride, contaminate the surface and form highly acidic or alkaline solutions when mixed with water. These compounds may come from the atmosphere in the form of hydrocarbons or pollutants, or they may come from within the glass itself. If the material in contact with glass is inert and moisture-proof, the material will protect the glass surface from changes caused by exposure to moisture. Later, if the contacting material is removed, a differential surface change may become quite visible and unattractive under some lighting and viewing conditions, even if the change is slight. In addition, some silicone sealants have ingredients, usually plasticizing oils, that may leach out and combine with other airborne particles to stain the glass. Also, primer or silicone sealant that overlaps the joint onto glass will leave a permanent mark because the silicone will chemically bond with the glass. Careful masking of the sealant joint during installation can prevent this type of discoloration.

When a small volume of water maintains contact with a relatively large area of soda-lime-silica (sodium calcium silicate) glass, conditions may be conducive to leaching of the alkaline materials in the glass. The interaction of glass and water results in the replacement of the sodium ions in the glass with hydrogen ions from the water. As sodium ions accumulate and hydrogen ions decrease in a thin film of water, the liquid will increase in alkalinity at a much greater rate than if it were absorbed into a large volume of water. Also, this reaction and, the solution pH increases much more rapidly at elevated temperature (140°F vs. 73°F [60°C vs. 23°C]). As long as the alkaline concentrations of the resulting solution remain below pH level of 8.5 (the threshold of permanent surface damage), glass etching does not occur. However, if the evaporation rate is very slow, and the pH level increases to 9.0 or above, glass network dissolution (glass etching) displaces ion exchange as the predominant reaction mechanism. This introduces glass ions such as calcium, magnesium, sodium, and silicon into solution.

Glass-surface corrosion requires a moist, stagnant environment in which water remains in prolonged and undisturbed contact with glass. Any factor that increases the length of time moisture is in contact with glass during wet-dry cycles is likely to speed tenacious staining and possibly contribute to glass etching. One of the most common contributors of differential wetting is dirt or dust. Dirt accumulation on glass holds the water on the glass longer causing moisture to attack the surface. The finely divided damp materials in contact with glass cause the glass constituents to dissolve slightly and be redeposited at the evaporating edge of the material, resulting in tenacious deposits. (Glass will normally lose some of its sodium ions by dissolution in water, but the calcium ion then stops most of the dissolution. In polluted atmospheres, the acids—SO_x or NO_x —will attack the calcium ion and permit further dissolution.) If the dissolved material is washed away, little change can be seen by the human eye. But when the solution remains on the glass, atmospheric carbonation of the alkali metal and alkaline earth silicates causes a subsequent tenacious deposit of silica gel.

Upon evaporation at a temperature of 73°F (23°C), dilute solutions of silica and silicates, with a concentration as low as 4 to 8 ppm (this includes hard water), can reach a point at which super-saturation occurs. This is accompanied by the rapid formation of polymerised silica and polysilicate species that generate amorphous, water-insoluble precipitates of silica gel on the glass. The silicates form chemical bonds to the

glass surface producing a "glass-on-glass" deposit. This deposit, after aging and exposure to atmospheric acids resists conventional cleaning agents and usually requires removal using polishing compounds such as optical grade cerium oxide or 4F pumice.

The hardened gel retains moisture and guides run-off water along the same paths. The process of surface corrosion then becomes self-perpetuating. When this happens uniformly, the eye does not detect the differences. However, the silica gel deposit or the glass etch depth need not be thicker than a wavelength of light for the eye to detect it. Frequent washing of the windows tends to remove the gel before it becomes hard, minimizing staining and etching of the glass.

Directed slow water run-off and the resultant dirt accumulation, cause the glass to be attacked non-uniformly. Eventually, the cycle of water drying, gel forming, acid atmosphere attack, and alkali-washing compounds causes in-depth glass dissolution. Then, the cost of cleaning and buffing can approach the cost of window replacement. Thus, architectural design and detailing including the use of drips can prevent this condition from occurring.

Staining will be more noticeable on tinted heat-absorbing glass because of the greater contrast between the lighter color of the stain or etch and the darker color of the glass. In addition, heat absorption will increase the rate of etch. There is no known difference in the composition of tinted glasses, which contributes to this staining, as compared to clear glass. Staining is also more noticeable on reflective glass.

The usual explanation for the etching of glass in concrete structures is that concrete contributes alkaline materials to the run-off water. Hydration of cement results in the formation of hydrated calcium silicates (CSH), $Ca(OH)_2$, and aluminates, and the remaining water in the concrete becoming highly alkaline. It is well known that alkali (OH^-), meaning high pH material, will attack glass. What is not well known is that atmospheric acids (NO_x, SO_x, and CO_2) can quickly neutralize low concentrations of these alkalies from concrete to produce less alkaline salts of calcium, sodium, or potassium. Of these reaction products, only the carbonates of sodium and potassium provide the most soluble alkaline salts. However, even these salts are quickly converted to the bicarbonates that are only very weakly alkaline.

Because the atmosphere is usually very acid in the larger cities (refer to Fig. 3.6.1 in Chapter 3), low concentrations of leached alkali (high pH) will be neutralized. However, in the case of concrete (that is less than 28 days old), higher concentrations of alkaline leachate may not be completely neutralized before it has reacted with the glass.

Although laboratory studies have demonstrated that glass can be susceptible to alkaline-induced surface damage, it does so under conditions that do not prevail in the environments typically encountered by glazing systems. In these studies, a solution of calcium hydroxide (pH 11.5) placed on glass at 140°F (60°C) in a controlled environment to retard evaporation does not cause chemical erosion or etching after 20 hours. In the field, it is only the last water droplets after a rain, adhering to glass, that could present a threat to surface quality via alkaline etching, if indeed the solution pH is 9.0 or greater and the residence time is well beyond 24 hours. It is doubtful that these droplets could exist intact for the periods required for severe alkaline etching to develop. Repeated deposition and evaporation can eventually lead to tenacious deposits and subsequent chemical etching.

Not all rainfall that contacts concrete has time to permeate the surface micro-pores to extract alkaline materials; in fact, much of the water flows away. Rainfall can permeate concrete having high absorption and cause efflorescence (see Section 3.6.8). The efflorescencing salts are usually neutralized by the carbon dioxide in the air within a relatively short period of time. The leaching of alkali from most concretes becomes dramatically reduced in one to two years because the surface lime is mostly carbonated in place, and the interior alkalies within the concrete matrix cannot usually be reached.

In addition, chemical reaction of the cement compounds with sulfur and nitrogen oxides in the air occurs with the subsequent precipitation by evaporation of solutions containing the reaction products, such as gypsum ($CaSO_4 \bullet 2H_2O$). The transference to and deposition of these materials on the window glass by rainwater can result in surface staining and etching, if they are allowed to remain on the glass for a period of time. (The gypsum acts in the same way as dirt in causing a stain.) The time period for a stain to result depends to some degree on the ambient temperatures with warmer temperatures causing the stain to occur sooner.

The plasticity of fresh concrete lends itself to use in

many shapes that may not incorporate proper water run-off in the final, hardened design. In addition, the rough surface textures of exposed aggregate concrete increase water retention, which results in slow water run-off. When uniform wetting of windows occurs, staining of glass generally does not occur. However, when differential wetting of the windows occur from a slow run-off of rainwater, such as by dripping, stains can occur regardless of the construction material used above the windows.

Weathering steel, bronze, limestone, aluminum, or precast concrete façades all may experience staining of window glass (Fig. 5.2.12). Analysis of powder scraped from glass stains on both a metal-clad and concrete-clad building show that a good portion of the stain is composed of gypsum indicating that SO_x from the atmosphere also plays a role in staining. The calcium on the metal building had to come from airborne substances or from the glass.

Considerations for Prevention of Staining. Newly developed hydrophobic coatings can be applied to the glass surface to protect it from chemical attack. However, there may be a limitation to the size of the glass units that can receive the coating. Hydrophobic coatings create a barrier between the glass and water and other pollutants. They help prevent the initial stages of corrosion and reduce the occurrence of other materials like mineral deposits from sticking to the glass. Hydrophobic substances repel water and harmful chemicals and keep glass free from staining. Microscopic-level glass surfaces are jagged with hills and valleys and hydrophobic coatings fill the voids, creating a smooth seal over the glass surface. This smoother surface is more scratch-resistant, repels wa-

Fig. 5.2.12

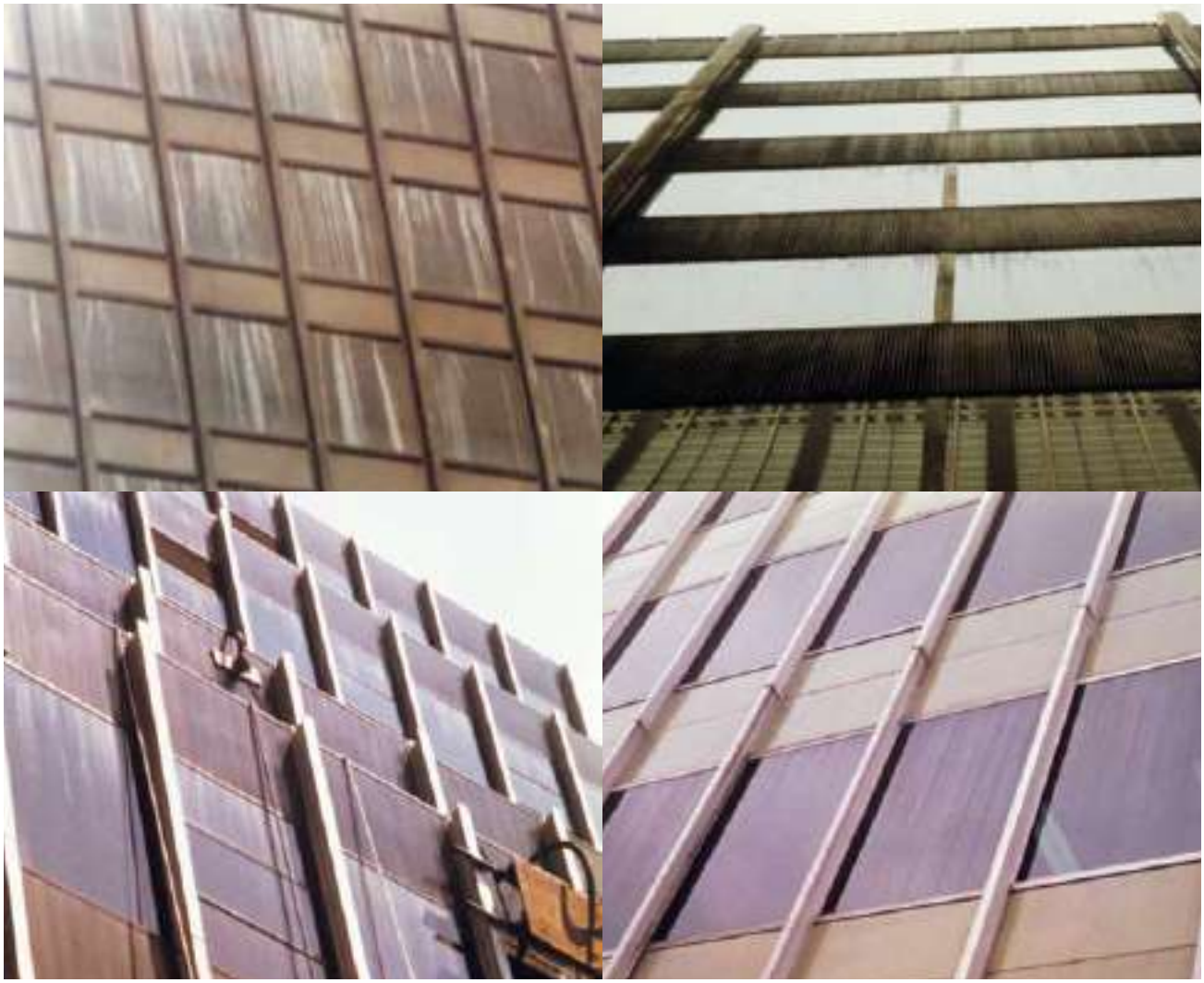

ter, and provides less adhesion for unwanted materials. The performance life of hydrophobic coating products can vary from weeks to over five years; however, they can be reapplied.

Building details can reduce the amount of water discharged to the glass. Concrete frames at window heads should, wherever possible, be designed so that they do not splay down and back toward the glass unless drip details are incorporated into the frames. Without drip details, a direct slow wash-down of the glass should be anticipated. A drip directs run-off water away from the glass. This will prevent many staining and etching problems.

An important line of defense against slow run-off is the introduction of edge drips and a second drip or gutter. This can be accomplished by having a cast-in drip in the concrete (see Section 3.6.2) or by using extrusions (either aluminum or neoprene) across the head of the window that have either an integral gutter or extended drip lip of at least 1 in. (25 mm) (Fig. 5.2.5).

Periodic window washing (every 90 days during construction and every 180 days thereafter depending on dirt accumulation) is important in minimizing stains and corrosion from occurring on glass. By doing this cleaning, deposits will not have time to accumulate.

It is important that glass be cleaned, rinsed, and dried with a clean squeegee following rain or other wash-off conditions, particularly during building construction. Since it is costly to ask for more than one washing during the construction phase, it might be advisable to include a provision for at least monthly examinations of the glass surfaces. Then, if dirt, dust, plaster, drywall spackle, grout, paint splatter, or other construction refuse is found, it can be removed before permanent damage occurs. (These materials can combine with dew or condensation to form mild chemicals that may etch or stain the glass.) Washing of the windows when deposits are first noticed minimizes staining and etching of the glass. Care should always be taken to prevent window cleaning compounds from being washed over the precast concrete panels or the panel surfaces will need to be cleaned. Acceptable cleaning procedures are available from glass manufacturers and fabricators.

A mild soap, detergent, or window-cleaning solution should be used to clean glass surfaces. The glass surface should then be rinsed immediately with clean water and any excess water removed from the glass surface with a squeegee. Detergents or other cleaners should be tested to make sure that they rinse away completely without leaving a film, which could hold dirt. Also, maintenance workers should clean the sealant joint as well as other building surfaces; otherwise, the dirt left in the joint may wash out over the clean surface. Harsh cleaners and abrasives, particularly those of an alkaline character, are not recommended, particularly on reflective glass. If a light stain or etch remains, it may be removed with a slurry of cerium oxide and water or 4F pumice and water mixed to a paste consistency and applied with a blocking pad. As an alternative, 4F pumice plus Windex may be rubbed on the glass, applying light pressure with a clean damp cloth, using 10 to 20 strokes. However, if the etch is already deep, the cleaning procedures will not produce a uniform surface by removing the streak because it is already in a different plane and reflects light at a different angle. Great skill is required in use of buffing heads to avoid creation of "bulls-eyes" and other non-uniform surface effects.

5.3 ENERGY CONSERVATION AND CONDENSATION CONTROL

5.3.1 Glossary

Albedo – Solar reflectance; see reflectance.

Dew-point temperature – The temperature to which air must be cooled so that it cannot hold any more water. This depends on the ambient temperature, relative humidity, and pressure. Below this temperature, condensation will occur. The temperature corresponding to saturation (100% relative humidity) for a given absolute humidity at constant pressure.

Building envelope – The components of building that perform as a system to separate conditioned space from the exterior.

Daylighting – Illuminating the inside of a building using natural light from the sun, rather than electrical fixtures. Daylighting controls can be used to dim or turn off lights along the building perimeter when daylighting is prevalent.

Film or surface resistance (R_f) – The thermal resistance of a thin layer of air adjacent to the indoor or outdoor side of a wall or other building component. Subscripts "i" and "o" are usually used to denote indoor and outdoor surface resistances, respectively.

Heat capacity – A measure of the ability of a material to store heat, defined as the amount of heat necessary to raise the temperature of a given mass by 1°F. Numerically, the sum of the products of the mass per unit area (unit weight) of each individual material in the roof, wall, or floor surface multiplied by its individual specific heat. Units are Btu/(ft^2·°F).

Perm – A measure of passage of water vapor or moisture flow through a material; specifically, the mass rate of water vapor flow through one square foot of a material or construction of one grain per hour induced by a pressure gradient between two surfaces of one inch of mercury. A perm is 1 grain per ([sq ft of area][hr][inch of mercury vapor pressure difference]). A grain is equivalent to $^1/_{7000}$ lb.

Permeability, water vapor (μ) – The property of a material that permits the passage of water vapor, defined as the time rate of water vapor transmission through unit area of flat material of unit thickness induced by unit vapor-pressure difference between two specific surfaces, under specified temperature and humidity conditions. It is equal to the permeance of a unit thickness, generally 1 in. of a material, or the product or permeance and thickness. Permeability is measured in perm inches. The permeability of a material varies with barometric pressure, temperature, and relative humidity conditions.

Permeance, water vapor (M) – The time rate of water vapor transmission through unit area of flat material or construction induced by unit vapor pressure difference between two specific surfaces, under specified temperature and humidity conditions. Permeance is measured in perms.

Reflectance – The ratio of the amount of light or solar energy reflected from a material surface to the amount that shines on the surface. Solar reflectance includes light in the visible and ultraviolet range. For artificial lighting, the reflectance refers to the particular type of lighting used in the visible spectrum.

Relative humidity (RH) – The ratio of water vapor present in air to the water vapor present in saturated air at the same temperature and pressure.

Specific heat – The quantity of heat energy in Btu's required to raise the temperature of one pound of a material by 1°F.

Sustainability – Development that meets the needs of the present without compromising the ability of future generations to meet their own needs.

Thermal conductivity (k) – The time rate of heat flow through a unit area induced by a unit temperature difference between two defined surfaces of a unit thickness of a homogenous material under steady-state conditions. Units are Btu·in./hr·ft^2·°F.

Thermal mass – A characteristic of concrete materials with mass heat capacity and surface areas capable of affecting building heating and cooling loads by storing and releasing heat as the interior and/or exterior temperature and radiant conditions fluctuate. Use of mass walls as part of the building envelope and in passive solar design reduces peak and total energy loads for many buildings and climates. Steady-state methods of measuring or predicting heat flow or energy use do not take into account the dynamic effects of thermal mass.

Thermal resistance (R) – A measure of resistance to heat flow of a material, defined as the reciprocal of the time rate of heat flow through a unit area induced by a unit temperature difference between two defined surfaces of a material or construction under steady-state conditions. Units are hr·ft^2·°F/Btu.

Thermal transmittance (U) – A measure of heat flow through a material. The inverse of total or overall thermal resistance (R_T). Units are Btu/hr·ft^2·°F.

5.3.2 Energy Conservation

Americans spend almost 90% of their time inside buildings. More than 2/3rds of the electricity generated and 1/3rd of the total energy (including fossil fuels and electricity) in the U.S. are used to heat, cool, and operate buildings. Significant energy could be saved if buildings were built to meet or exceed minimum national energy code standards. Saving energy will result in fewer power plants and natural resources being used to provide electricity and natural gas. It also means fewer emissions to the atmosphere. These emissions have been associated with the formation of smog, acid rain, and global climate change.

Energy codes provide minimum building requirements that are cost effective in saving energy. The U.S. Energy Conservation and Production Act (ECPA) requires that each state certify that it has a commercial building code that meets or exceeds ANSI/ASHRAE/IESNA

Standard 90.1[1]. In this sense, "commercial" means all buildings that are not low-rise residential (three stories or less above grade). This includes office, industrial, warehouse, school, religious, dormitories, and high-rise residential buildings. Some states implement codes similar to *ASHRAE Standard 90.1* and some have other codes or no codes. The status of energy codes by states is available from the Building Codes Assistance Project (BCAP) (www.bcap-energy.org/backissues.html). The designer is not constrained in aesthetic expression in applying the range of available high performance building systems to meet the performance criteria of ASHRAE 90.1.

Sustainability or green-building programs such as LEED™[2]or EnergyStar[3] encourage energy savings beyond minimum code requirements. The energy saved is a cost savings to the building owner through lower monthly utility bills, and smaller, thus less expensive heating, ventilating and, air-conditioning (HVAC) equipment. Less energy use also means fewer emissions to the atmosphere from fossil fuel power plants. Some government programs offer tax incentives for energy saving features. Other programs offer reduced mortgage rates. The EnergyStar program offers simple computer programs to determine the utility savings and lease upgrades associated with energy-saving upgrades. Sustainable buildings often have features that have been shown to increase worker productivity, decrease absenteeism, and increase student test scores in schools.

The planned design of an energy-conserving or sustainable building requires the architect's understanding of the effects of design decisions on energy performance. More than half of the true total costs incurred during the economic life of a building may be attributable to operating and energy costs. An integrated design approach considers how the walls interact with the building and its HVAC system. Using this approach early in the design phase helps optimize initial building costs and reduce long-term heating and cooling energy costs.

Precast concrete panels have many inherent advantages when it comes to saving energy and protecting the building from the environment. Their versatility leads to unique solutions for energy conservation. The relative importance of particular design strategies for any given building depends to a large extent on its location. For instance, buildings in northern, heating-season-dominated climates are designed differently than those in southern, cooling-season-dominated climates.

Several factors influence the actual energy performance of the building envelope. Some of these are recognized in energy codes and sustainability programs because they are relatively easy to quantify. Others are more complex and are left to the discretion of the designer.

Much of the information and design criteria that follow are taken from or derived from the *ASHRAE Handbook of Fundamentals,*[4] and the ANSI/ASHRAE/IESNA Standard 90.1. It is important to note that all design criteria are not given and the criteria used may change from time to time as the ASHRAE Handbook and Standard are revised. It is therefore essential to consult the applicable codes and revised references for the specific values and procedures that govern in a particular area when designing the energy conservation systems of a particular structure.

Building orientation plays an important role in building energy consumption. If possible, the long axis of the building should be oriented in the east-west direction to help control the effect of the sun on heating and cooling loads. If the long axis is parallel to the east-west direction, solar gain through glazing on the east side of the building in the morning and on the west side in the afternoon increases the heat gain in the building. This increases the air-conditioning load on a building and makes it more difficult to control the building temperature in different areas of a building. However, east glazing will help warm an office building in early morning hours after night-temperature setbacks.

To maximize beneficial solar heating, glazing should be located on the south wall to maximize exposure to winter sunshine in cold climates. South-facing glass should be shaded to minimize solar exposure in the summer.

In the southern regions of the U.S., the primary emphasis is on cooling. Glass should be more predomi-

1 ANSI/ASHRAE/IESNA Standard 90.1-1999 – Energy Standard for Buildings Except Low-Rise Residential Building, American Society of Heating, Ventilating, and Air-Conditioning Engineers (ASHRAE), Atlanta. http://www.ashrae.org

2 Leadership in Energy and Environmental Design, U.S. Green Building Council. www.USGBC.org

3 U.S. Environmental Protection Agency. www.EnergyStar.gov

4 *ASHRAE Handbook of Fundamentals* - 2001, American Society of Heating, Refrigerating, and Air-Conditioning Engineers, Atlanta, GA. www.ASHRAE.org

nant on the north side of buildings in these regions to minimize heat gains from the sun.

Building shape influences energy performance in two ways. First, it determines the surface area of the building skin. The larger the skin area, the greater the heat gain (summer) or loss (winter). Second, shape influences how much of the floor area can be illuminated using natural light from the sun, called daylighting. "E" and "H" shaped buildings provide maximum exposure of occupants to operable windows, but also have the added benefit of providing optimal daylighting.

Glazing (the clear portion of windows) in buildings requires special consideration during the design stage. The type, amount, and orientation of glazing will profoundly affect heating, cooling, and daylighting requirements, HVAC system selection, human comfort, and environmental satisfaction. Today's high-performance glazing comes in many forms: those with low emissivity (low-E), those filled with inert gas to further lower U-factors, and those that are spectrally selective. Heat gain through a sunlit glass area is many times greater than through an equal area of precast concrete and its effect is usually felt almost immediately. Direct solar gains also cause glare in the work space. Properly designed shading devices can modify the thermal effects of windows to a great extent. Glazing with low solar heat gain and high visible light transmittance provide the most benefits in most climates. More information on glazing is available through the National Fenestration Rating Council (NFRC) (www.nfrc.org) and the chapter on fenestration in the *ASHRAE Handbook of Fundamentals*.

Daylighting saves energy by using natural light from the sun rather than artificial lighting for illumination. Controlling the type and amount of glazing influences the benefits of daylighting. The potential energy savings from daylighting is particularly significant in commercial buildings because of the large lighting requirements in these buildings. Lighting can account for approximately one-third of the building energy costs. Daylighting controls can be used to dim or turn off lights along the building perimeter when daylighting is prevalent. Daylighting is not as effective as direct sunshine for providing light; as it is controlled low-glare sunshine moderated by shading. Daylighting should be maximized through location and size of windows and through use of glazing systems and shading devices appropriate to building orientation and space use.

Color (albedo) of precast concrete panels can be used to improve the energy conserving features of the walls. Panels with high albedo (generally lighter in color) can help reduce the urban heat island effect. Albedo, which in this case is synonymous with solar reflectance, is the ratio of the amount of solar radiation reflected from a material surface to the amount that shines on the surface. Solar radiation includes the ultraviolet, as well as the visible spectrum. Albedo is measured on a scale of 0.0 to 1.0, from not reflective to 100% reflective, respectively. Generally, materials that appear to be light-colored in the visible spectrum have high albedo and those that appear dark-colored have low albedo, Table 5.3.1. Because reflectance in the solar radiation spectrum determines albedo, color in the visible spectrum is not always a true indicator of albedo.

On exterior surfaces, high albedo surfaces (generally light colors) decrease solar heat gain; low albedo (dark colors) increase solar heat gain. For instance, a low-albedo north wall and high-albedo east and west walls and roof form the most energy-conserving arrangement in a northern hemisphere climate that uses both heating and cooling. For example, changing an uninsulated building wall in Miami from a low albedo to a high albedo can reduce annual cooling energy flux (heat flow through the building envelope) by about 15%. High albedo surfaces are especially important where cooling dominates the energy requirements. It should be noted, however, that the color of the exterior walls has less effect on energy consumption when the walls have high R-values and thermal mass. The benefit of high-albedo surfaces in decreasing cooling loads is often greater than the benefit of low-albedo surfaces in decreasing heating loads even in cold climates. This occurs due to the decreased benefit of the sun in the winter due to its lower angle, shorter days, and often more cloudy conditions.

Light-colored exterior surfaces also help reduce urban heat islands. Urban areas are up to 7°F warmer than the surrounding areas, as shown in Fig. 5.3.1. This difference is attributed to more buildings and pavements that have taken the place of vegetation. Trees provide shade that reduces temperatures at the surface. Vegetation including trees provides transpiration and evaporation that cool their surfaces and the air surrounding them. Where buildings and paved surfaces are required, using materials with higher albedos will reduce the heat island effect, save energy by reducing the demand for air conditioning, and improve air qual-

ity. The probability of smog greatly increases whenever air temperatures exceed 75°F. Using trees and light-colored surfaces can help reduce the number of hours a city temperature is above 75°F, and thereby reduce smog.

Planting deciduous trees that lose their leaves in the winter, such as oak and maple, helps keep a building and the surrounding area cool. During the winter months when no leaves are present, the building benefits from solar gains. Trees planted on the south and west sides of building are particularly effective in providing shading and reducing solar gains in buildings.

Wind can decrease the exterior still-air film that usually surrounds a building and contributes to the insulating R-values of wall elements, thus increasing heating and cooling loads. This effect is most predominant in uninsulated concrete walls and becomes less marked as the wall R-value and thermal mass increase. Wind also carries solar heat away from a building and evaporates moisture on wet surfaces, thus possibly cooling the skin to temperatures lower than the ambient air. High winds create pressure differences across walls which will increase air leakage through the walls. Cold air leakage to the inside must be heated and probably humidified. This also requires an expenditure of energy. Planting non-deciduous evergreen trees on the windward (generally north and west) side of buildings decreases energy losses in winter.

Table 5.3.1. Solar Reflectance (Albedo) of Select Material Surfaces. [1, 2, 3, 4]

Material Surface	Solar Reflectance
Black acrylic paint	0.05
New asphalt	0.05
Black rubber or bitumen roof material	0.06
Aged asphalt	0.1
"White" asphalt shingle	0.2
Aged concrete	0.2 to 0.3
New concrete (traditional)	0.4 to 0.5
New concrete with white portland cement	0.7 to 0.8
Aged average white membrane roof	0.77
White acrylic paint	0.8
Average white membrane roof	0.82

1 Levinson, Ronnen and Akbari, Hashem, "Effects of Composition and Exposure on the Solar Reflectance of Portland Cement Concrete," Publication No. LBNL-48334, Lawrence Berkeley National Laboratory, 2001, 39 pp. http://eetd.lbl.gov/HeatIsland/

2 Pomerantz, M., Pon, B., and Akbari, H., "The Effect of Pavements' Temperatures on Air Temperatures in Large Cities," Publication No. LBNL-43442, 2000, Lawrence Berkeley National Laboratory, 20 pp. http://eetd.lbl.gov/HeatIsland/

3 Berdahl, P. and Bretz, S, "Spectral Solar Reflectance of Various Roof Materials", *Cool Building and Paving Materials Workshop*, Gaithersburg, Maryland, July 1994 14 pp. http://eetd.lbl.gov/HeatIsland/

4 Pomerantz, M., Akbari, H., et al, "Examples of Cooler Reflective Streets for Urban Heat Islands: Cement Concrete and Chip Seals," Lawrence Berkeley National Laboratory. http://eetd.lbl.gov/HeatIsland/

Fig. 5.3.1 Urban heat-island profile (LBNL website).

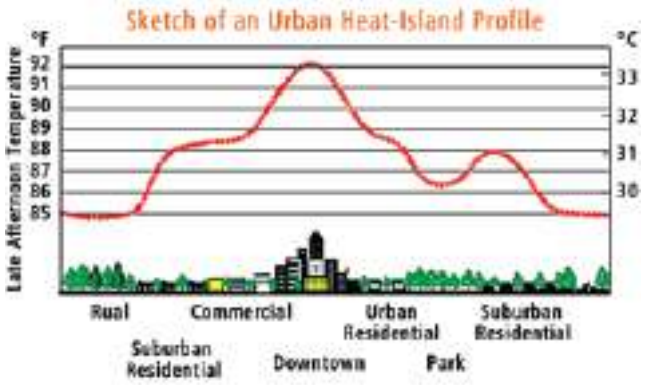

Texture of precast concrete panels has a minor effect on energy conservation. Increasing the surface roughness of the wall exterior causes an increase in the amount of sunlight absorbed and reduces the effect of wind on heat loss and gain. Ribbed panels act as baffles to wind, thereby reducing conductive heat loss and infiltration. Although this has a somewhat smaller effect than proper color selection, it can help to reduce total energy consumption. However roughness and ribs can also decrease solar reflectivity and increase solar heating, thus indicating a balance is necessary depending on local conditions.

Air infiltration has significant effects on the amount of energy required to heat and cool a building. Air leaks into or out of the building envelope through gaps between building materials. The amount of leakage is dependent on the size of the gaps and pressure differences due to building height, indoor-outdoor temperature differences, and wind pressure. Air leakage increases as pressure differences increase. Additional information on air infiltration is provided in section 5.3.6.

Shading is a fundamental design strategy for pre-

venting solar heat gain and diffusing bright sunlight. Recessed window walls, vertical fins, and various other sculptured shapes facilitate the design of many types of shading devices for windows, including vertical and horizontal sunshades. In the cooler months, when the sun's angle of incidence is low, the shading devices may be angled to let the sunshine in and help reduce heating loads on the building's heating system, (Fig. 5.3.2). The shading approach selected can reinforce and enhance the design content and form of the building, in some cases becoming the prime form-giving element. Shading may have to be modified or compromised in order to meet other important requirements. Figure 5.3.2 shows preferred cross-sections (in elevation) for precast concrete used as shading elements. Note that in each case, the spandrel and sunscreening elements are integral and may be lifted into place in one operation. The designer should be aware of the increased possibility of glass breakage from sharp shading lines caused by a thermal stress differential between the shaded and unshaded portions of a singleglass unit. Where shading differential is anticipated, the use of heat-strengthend rather than annealed glass is often advised by glass manufacturers.

Shading using horizontal or vertical plane(s) projecting out in front of or above a window can be designed to block the summer sun, allow most of the winter sun, and provide a view for occupants. If the plane projects far enough from the building, a single projection may be sufficient, as in the case of generous roof overhangs or windows recessed deeply between vertical fins. Alternatively, more modest projections can be equally effective in shading but they must be more closely spaced. Closely spaced horizontal or vertical planes may begin to dominate the view out of a window and in any case change the scale of the window. The proportion of the space divided by the shading planes becomes as important as the overall window proportion in determining the aesthetic effect of the fenestration.

In summer, vertical fins will shade the early morning and late afternoon sun while horizontal fins keep out the high-altitude mid-day sun. In winter these shades will not interfere with the sun because of its low altitude and southerly azimuth at sunrise and sunset.

Horizontal shading is most effective on southern exposures, but if not extended far enough beyond the windows, it will permit solar impingement at certain times of the day. Designs may be flat or sloping; sloping versions may be of shorter length, but obstruct more of the sky view (Figs. 5.3.3 and 5.3.4). The detached screen panel parallel to the wall in Fig. 5.3.5 was used to block the rays of the sun, while still allowing light to enter the windows. Sun-shading may also be provided through the use of a free-standing perimeter structure set in front of the actual building enclosure (Fig. 5.3.6).

Fig. 5.3.2 Daylighting – panels used to shade glass.

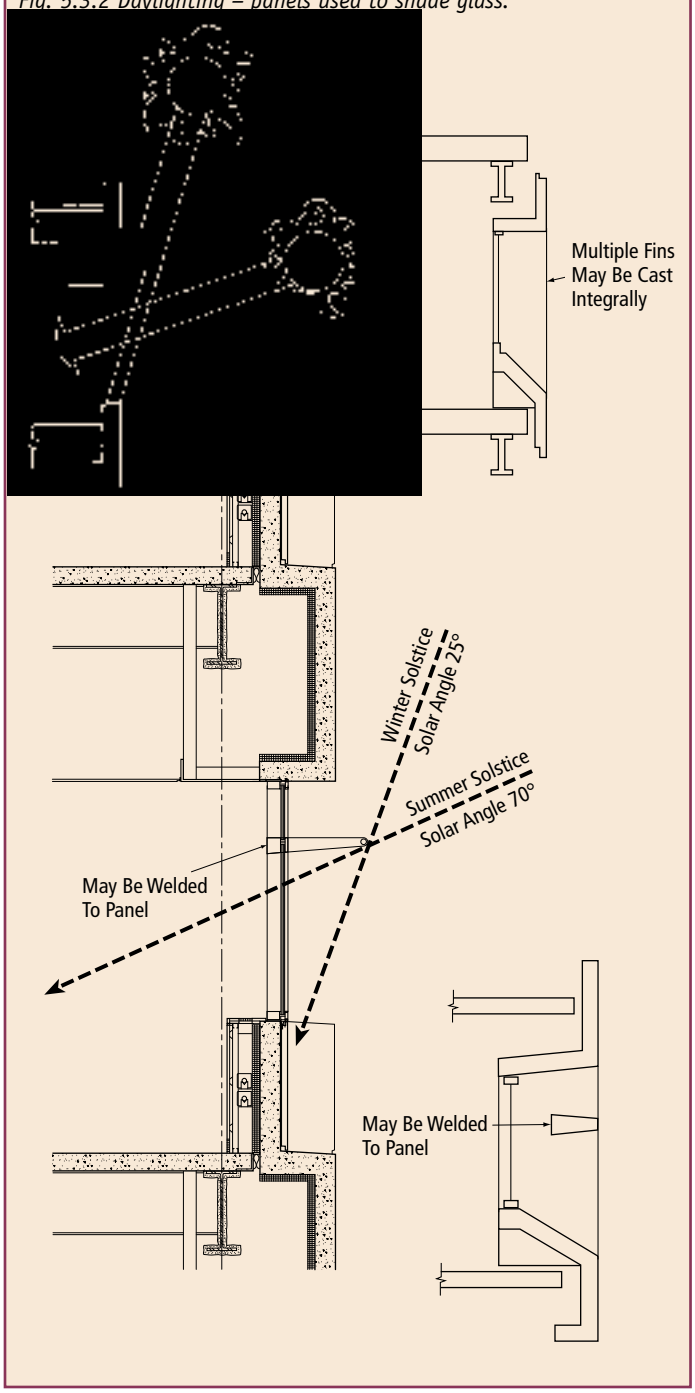

Fig. 5.3.3
Cornerstone, Plantation, Florida; Architect: Thompson, Ventulett, Stainback & Associates; Photos: Brian Gassel/TVS.

Horizontal shading can have a significant impact on heat gain through windows. In Miami, overhangs with a projections factor of 0.5 can reduce annual energy flux (heat flow through the building envelope) by about 15%. The relative impact declines to about a 10% reduction in northern climates. A projection factor is defined as the horizontal length of the overhang divided by distance from the bottom of the glass to the underside of the projection. So a projection about half the height of the window, directly above the window, will have a projection factor of about 0.5. Permanent projections can be used to help meet the solar heat gain coefficient (SHGC) requirement when using ANSI/ASHRAE/IESNA Standard 90.1-2007.

In windy areas, the solar screens can be made to serve the double purpose of wind-breaks. Trees adjacent to the building can also serve the function of sun shading and wind-breaks.

Sunscreen panels, which have pockets to receive precast double tees, form the south, east and west faces of the midrise office building in Fig. 5.3.7(a) and (b) while the north face features flat panels with punched openings.

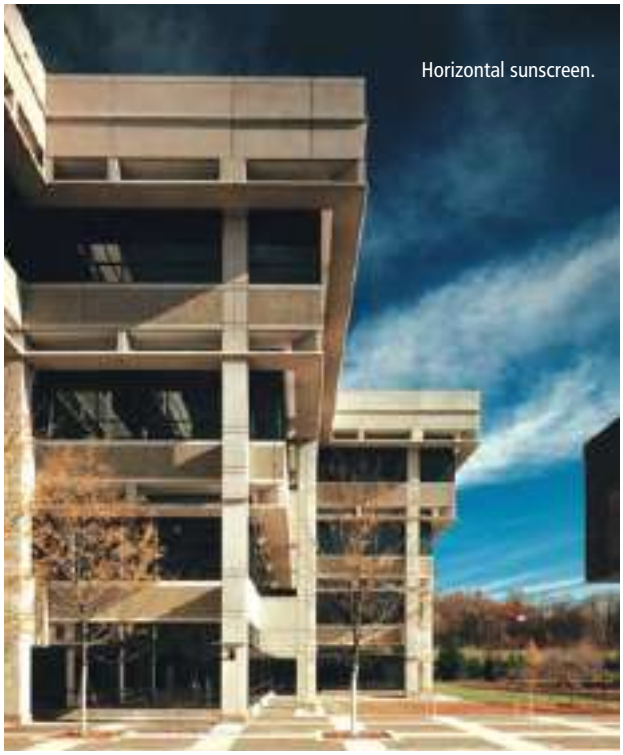

Fig. 5.3.4
Blue Cross and Blue Shield of Connecticut, North Haven, Connecticut; Architect: Ellenzweig Associates,Inc.; Photo: ©1990 Steve Rosenthal.

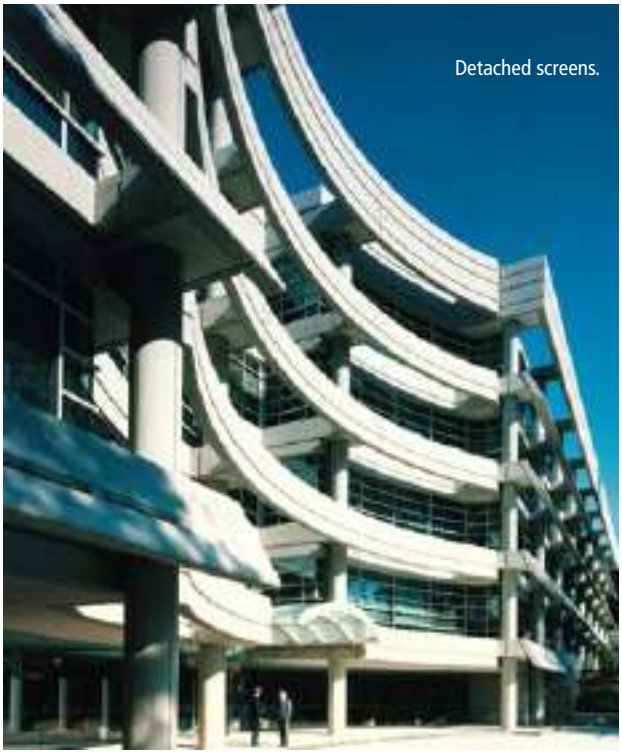

Fig. 5.3.5
United Parcel Service Corporate Offices, Atlanta, Georgia; Architect: Thompson, Ventulett, Stainback & Associates; Photo: Brian Gassel/TVS.

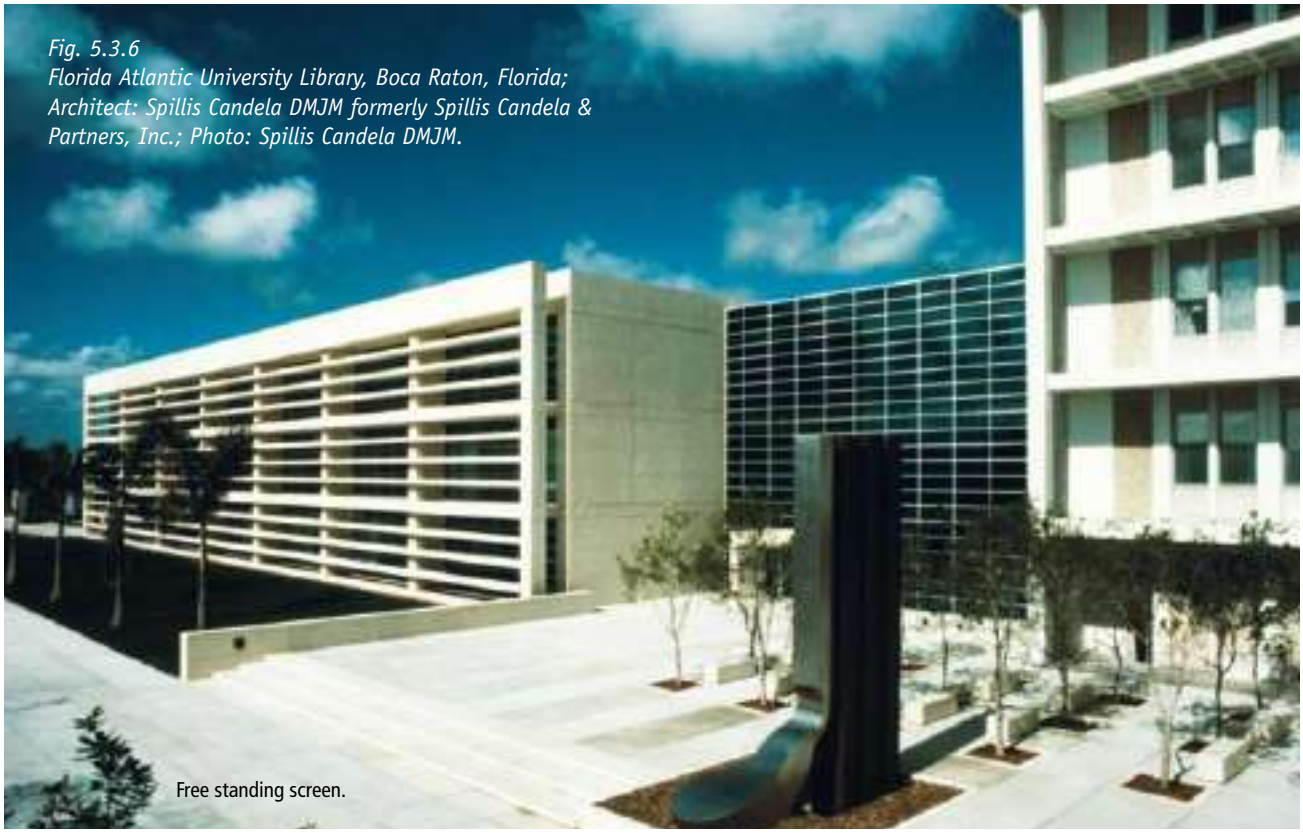

Fig. 5.3.6
Florida Atlantic University Library, Boca Raton, Florida; Architect: Spillis Candela DMJM formerly Spillis Candela & Partners, Inc.; Photo: Spillis Candela DMJM.

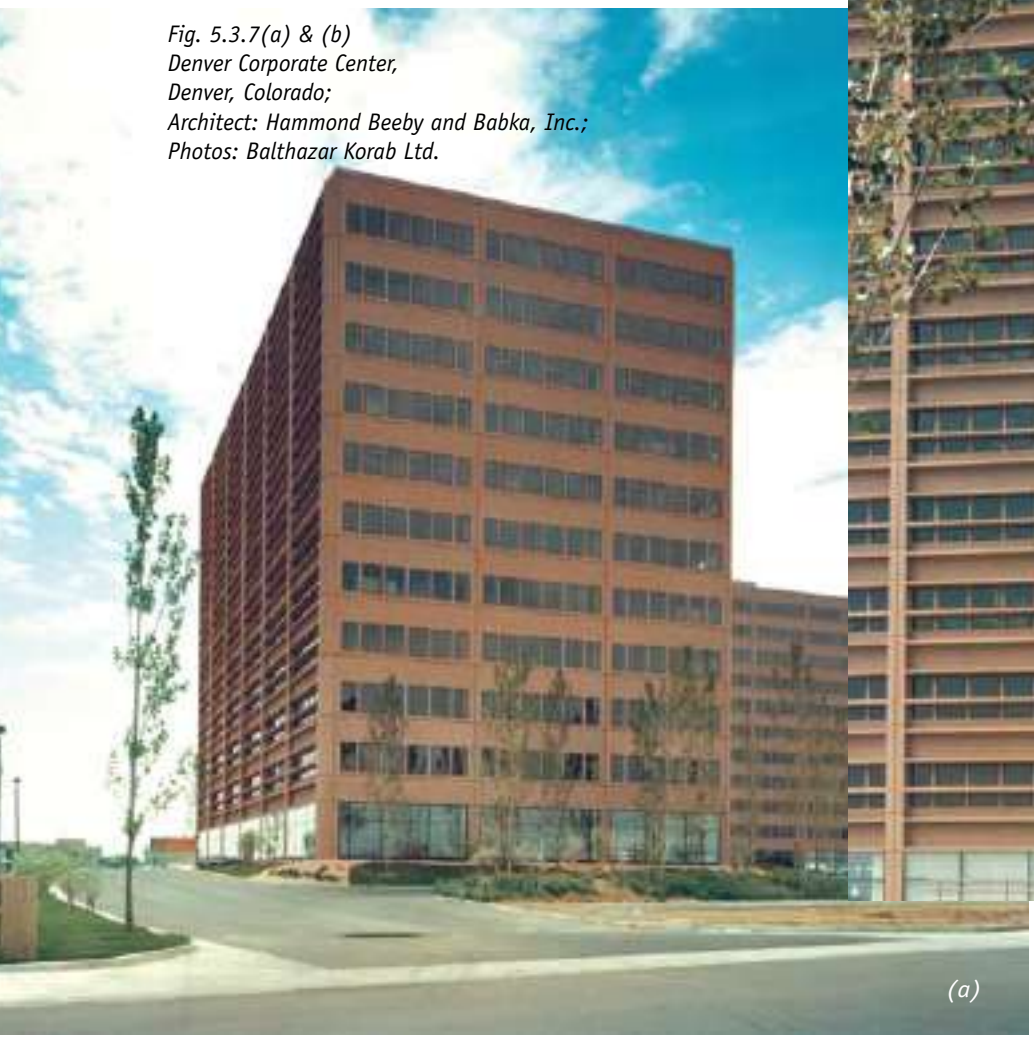

Fig. 5.3.7(a) & (b)
Denver Corporate Center,
Denver, Colorado;
Architect: Hammond Beeby and Babka, Inc.;
Photos: Balthazar Korab Ltd.

(a)

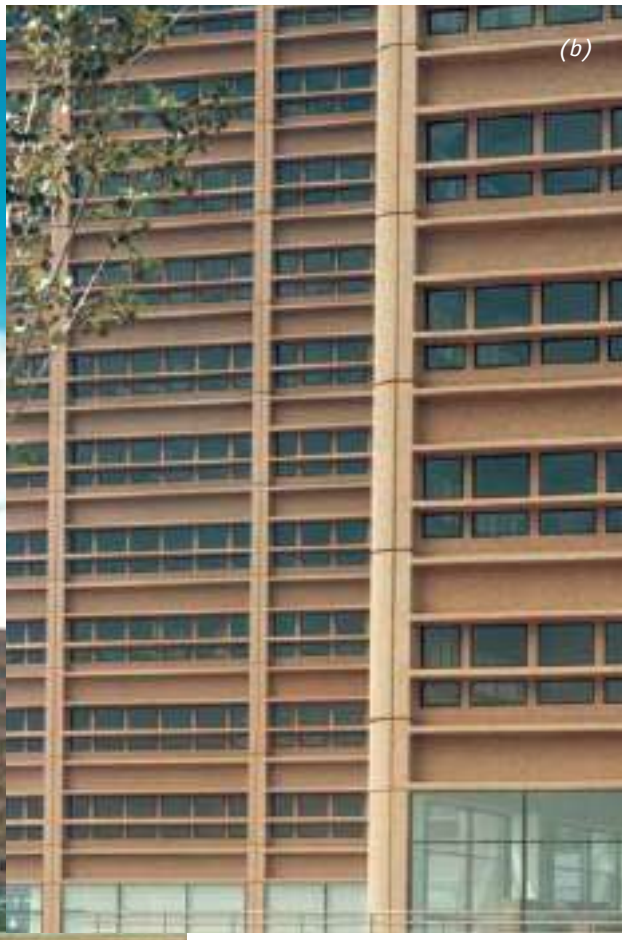

(b)

Variation of panel shape on different faces.

Variation of window openng orientation.

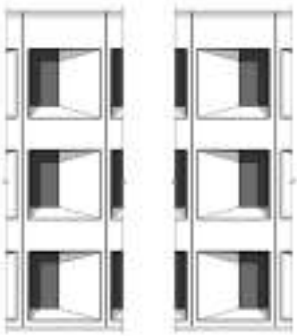

Fig. 5.3.8
Valley River Office Park, Eugene, Oregon; Architect: Boutwell, Gordon, Beard and Grimes; Photo: Boutwell, Gordon, Beard and Grimes.

Solar control through the use of shading devices is most effective when designed specifically for each façade, since time and duration of solar radiation vary with the sun's altitude and azimuth. The designer can predict accurately the location and angles of the sun, designing overhangs or fins to shade exactly the area desired. This type of envelope response can be seasonal (shade during certain times of the year) or daily (shade during certain hours of the day).

The versatility of precast concrete was used to change the window opening configuration with respect to wall orientation in order to maximize solar gains in the winter and minimize them in the summer (Fig. 5.3.8). Since the windows are small relative to the wall surface, the window units were splayed back on two different planes (at the sill and jamb) so that the windows could be recessed and shaded.

East and west facing windows are more effectively shaded by vertical projecting planes (Fig. 5.3.9). Vertical projections (fins) from either side of the window narrow the peripheral view from the window. In the Northern hemisphere the further south a building is located, the more important shading east- and west-facing windows becomes, and the less important it is to shade south-facing windows. This is due to the high position of the summer sun in southern latitude with the resulting decrease in direct sunlight transmitted by the south-facing windows.

In Fig. 5.3.10, the top floor is cantilevered over the main floor to shade the windows. All second floor windows on the east and west sides are oriented directly south or north for sun control. The vertical wingwall

Fig. 5.3.9
Medical Science Research Building, Duke University Medical Center, Durham, North Carolina; Architect: Payette Associates; Photo: ©2007 Brian Vanden Brink, Photographer.

shading devices completely shade the windows during the four summer months.

The use of three-dimensionally profiled precast concrete window wall units permits windows to be recessed within an enclosing concrete surround. The sides may be vertical or angled. Deeply recessed windows are particularly effective in minimizing solar heat gains without reducing natural light and view. Eggcrate shading works well on walls facing southeast, and is particularly effective for a southwest orientation. Because of its high shading efficiency, the eggcrate device (deeply recessed windows) is often used in hot climates. The deep, recessed window areas and massive overhangs in Fig 5.3.11 illustrate the total flexibility of design that precast concrete offers the architect.

Three-foot-deep (1 m) "eyebrows," were the shading device used to keep out the sun's rays in the summer and reduce cooling loads (Fig. 5.3.12).

Precast concrete and inclined glass can work together for optimum use of daylighting. Direct sun strikes the glass at an angle and is reflected, reducing glare, while indirect sunlight reflects off the sill of the precast concrete panel and through the glass to provide soft natural light at the perimeter of the building (Fig. 5.3.13). By keeping the direct rays of the sun out of the building, cooling loads are considerably reduced and daylighting is maximized. "Eyelid" or hooded shading devices and inclined glass can be very effective in controlling the penetration of the sun into a building by reducing the area of glass exposed to the sun (Fig. 5.3.14).

Fig. 5.3.10
Arizona Public Service Administration Complex, Phoenix, Arizona; Architect: DFD Cornoyer-Hedrick formerly Comoyer-Hedrick Architects & Planners; Photo: DFD Comoyer Hedrick.

Fig. 5.3.11
East Los Angeles Municipal Courts Building, East Los Angeles, California; Architect: Kanner Architects; Photo: Kanner Architects.

Fig. 5.3.12
Strom Thurmond Federal Office Building and Courthouse, Columbia, South Carolina; Architect: Marcel Breuer Associates and Design Partnership; Photo: ©Image courtesy of Marcel Breuer papers, 1920-1986, in the Archives of American Art, Smithsonian Institution.

This shading device softens the brightness contrast between the interior and exterior. Rounded heads, sills, and jambs or deep window wells could also be used to soften brightness contrasts (Fig. 5.3.15).

5.3.3 Thermal Resistance (R-value)

Common thermal properties of materials and air spaces are based on steady state tests, which measure the heat that passes from the warm side to the cool side of the test specimen. Thermal mass of concrete, which is

Fig. 5.3.13
Security Insurance Group Headquarters, Farmington, Connecticut; Architect: Russell Gibson von Dohlen; Photo: Steve Rosenthal.

Fig. 5.3.14
Miami Police Station, Miami, Florida; Architect: Borrelli + Partners formerly Pancoast, Bouterse, Borrelli, Albaisa, Architects/Planners, Inc.; Photo: Borrelli + Partners.

Fig. 5.3.15 Jambs, head or sill (rotate 90°).

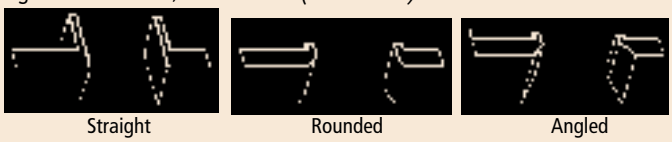

not based on steady-state tests, is discussed in Section 5.3.5. Daily temperature swings and heat storage effects are accounted for in thermal mass calculations. The results of steady-state tests provide the thermal resistance (R-value) of the air, material, or combination of materials tested. Tests of homogenous materials are also used sometimes to provide the thermal conductivity value. The R-value per inch of a homogenous material is equal to the inverse of its thermal conductivity. The R-value for a material with a specific thickness is its thickness divided by thermal conductivity.

The overall (total) R-value of a building wall is computed by adding together the R-values of the materials ($R_{materials}$) in the section, the indoor and outdoor air film surfaces (R_{fi} and R_{fo}) and air spaces (R_a) within the section.

$$R_{total} = R_{fi} + R_{materials} + R_a + R_{fo} \qquad \text{Equation 5.3.1}$$

or

$$R_{total} = R_{fi} + R_{concrete} + R_{insulation} + R_a + R_{fo}$$

These equations are only applicable for layered systems where each layer is composed of a homogenous material. In framing or other systems where members or elements penetrate the insulation layer, the series-parallel or zone method from the *ASHRAE Handbook of Fundamentals* must be used.

Table 5.3.2 Thermal Resistances, R_f, of Surfaces[1].

Position of surface	Direction of heat flow	Indoor – Still Air, R_{fi}			Outdoor – Moving Air, R_{fo}	
			Reflective surface		Non-reflective surface	
		Non-reflective surface	Aluminum-coated paper, polished	Bright aluminum foil	15 mph wind, winter design	7.5 mph wind, summer design
Vertical	Horizontal	0.68	1.35	1.70	0.17	0.25
Horizontal	Up	0.61	1.10	1.32	0.17	0.25
	Down	0.92	2.70	4.55	0.17	0.25

1. *ASHRAE Handbook of Fundamentals*, 2005, www.ASHRAE.org.

Table 5.3.3 Thermal Resistances, R_a, of Air Spaces[1].

Position of Air Space	Direction of Heat Flow	Air Space		Non-Reflective Surfaces	Reflective Surfaces		
		Mean temp., °F	Temp. difference, °F		One side[2]	One side[3]	Both sides[3]
Vertical	Horizontal (walls)	**Winter**					
		50	10	1.01	2.32	3.40	3.63
		50	30	0.91	1.89	2.55	2.67
	Horizontal (walls)	**Summer**					
		90	10	0.85	2.15	3.40	3.69
Horizontal	Up (roofs)	**Winter**					
		50	10	0.93	1.95	2.66	2.80
		50	30	0.84	1.58	2.01	2.09
	Down (floors)	50	30	1.22	3.86	8.17	9.60
		50	10	1.24	4.09	9.27	11.15
	Down (roofs)	**Summer**					
		90	10	1.00	3.41	8.19	10.07

1 For 3½ in. air space thickness. The values, with the exception of those for reflective surfaces, heat flow down, will differ about 10% for air space thicknesses of ¾ in. to 6 in. Refer to the *ASHRAE Handbook of Fundamentals* for values of other thicknesses, reflective surfaces, heat flow directions, mean temperatures, and temperature differentials. *ASHRAE Handbook of Fundamentals*, 2005, www.ASHRAE.org.

2 Aluminum painted paper.

3 Bright aluminum foil.

The U-factor is the reciprocal of the total R-value ($U = 1/R_{total}$).

Tables 5.3.2 and 5.3.3 give the thermal resistances of air films and 3½ in. (90 mm) air spaces, respectively. The R-values of air films adjacent to surfaces and air spaces differ depending on whether they are vertical, sloping, or horizontal and, if horizontal, whether heat flow is up or down. Also, the R-values of air films are affected by the velocity of air at the surfaces and by their reflective properties.

Tables 5.3.4 and 5.3.5 provide thermal properties of most commonly used building materials. The R-values of most construction materials vary somewhat depending on the temperature and thickness. Note that expanded polystyrene and extruded polystyrene board insulation have different thermal and physical properties. Expanded polystyrene (EPS) or beadboard is composed of small beads of insulation fused together. Extruded polystyrene (XPS) is usually pigmented blue, pink, or green, and has a continuous closed cell structure. XPS generally has a higher thermal resistance, higher compressive strength, and reduced moisture absorption compared to EPS. Mineral fiber and fiberglass batt insulation are not included in the table, but are generally labeled by the manufacturer. The most common batts for walls are R11, R13, and R19, with the number following the R indicating the R-value.

Glazing thermal performance is measured by thermal transmittance (U-factor), solar heat gain coefficient (SHGC), and visible light transmission (VLT). A low SHGC will minimize solar heat gains and reduce cooling loads. Some products with low SHGC also have a low VLT that will reduce daylighting benefits. Products with a low SHGC and high VLT are often a good choice. Since glazing types have proliferated in recent years, refer to the *ASHRAE Handbook of Fundamentals* or the NFRC for glazing and fenestration properties. Table 5.3.5 provides some typical values.

Table 5.3.6 gives the thermal properties of various weight concretes in the "normally dry" condition. Normally dry is the condition of concrete containing an equilibrium amount of free water after extended exposure to room temperature air at 35 to 50 percent relative humidity. Thermal conductivities and resistances of other building materials are usually reported for oven dry conditions. However, concrete starts out wet and is rarely in the oven dry condition. Higher moisture content in concrete causes higher thermal conductivity and lower thermal resistance. However, normally dry concrete in combination with insulation generally provides about the same R-value as equally insulated oven dry concrete.

Table 5.3.4 Thermal Properties of Various Building Materials at 75°F[1].

Material	Density, lb/ft³	Resistance, R per in. of Thickness, hr·ft²·°F/Btu	Specific Heat, Btu/(lb·°F)
Insulation, rigid			
Cellular glass	8.0	3.03	0.18
Glass fiber, organic bonded	4.0 – 9.0	3.1 – 4.2	0.23
Mineral fiber, resin bonded	15	3.1 – 4.2	0.17
Extruded polystyrene (XPS), extruded cont. closed cell	1.8 – 3.5	5.00	0.29
Expanded polystyrene (EPS), molded bead	1.0	3.85	—
	1.25	4.00	
	1.5	4.17	
	1.75	4.17	
	2.0	4.35	—
Cellular polyurethane/ polyisocyanurate (unfaced)	1.5	6.25 – 5.56[2]	0.38
Cellular phenolic, closed cell	3	8.2	
Cellular phenolic, open cell	1.8 – 2.2	4.4	
Polyicynene	0.5	3.6	
Miscellaneous			
Gypsum board	50	0.88	0.26
Particle board	50	1.06	0.31
Plaster			
cement, sand aggregate	116	0.20	0.20
gypsum, lightweight aggregate	45	0.63	—
gypsum, sand aggregate	105	0.18	0.20
Wood, hard (maple, oak)	38 – 47	0.94 – 0.80	0.39
Wood, soft (pine, fir)	24 – 41	1.35 – 0.89	0.39
Plywood	34	1.25	0.29

1 See Table 5.3.6 for concrete. *ASHRAE Handbook of Fundamentals*, www.ASHRAE.org.

2 An aged value of 6.0 is currently recommended. *Environmental Building News*, January 2005, www.BuildingGreen.com.

Table 5.3.5 Thermal Properties of Window with an Aluminum Frame[1].

Window System	U-Factor, Btu/hr·ft²·°F	SHGC[2]
Double glazing with low-E coating and argon gas fill in an aluminum frame with thermal break	0.36	0.36
Double glazing with a low-E coating in an aluminum frame with thermal break	0.40	0.36
Double glazing in an aluminum frame with thermal break	0.56	0.65
Single glazing in an aluminum frame with no thermal break	1.13	0.65

1 Values will vary by manufacturer; check with supplier.

2.SHGC can vary significantly up or downward with the coating selected.

Table 5.3.6 Thermal Properties of Concrete[1].

Description	Concrete Density, lb/ft³	Thickness, in.	Resistance, R		Specific heat, Btu/(lb·°F)
			Per in. of thickness, hr·ft²·°F/Btu	For thickness shown, hr·ft²·°F/Btu	
Concrete including normal weight, lightweight, and lightweight insulating concretes	145		0.063		0.20
	140		0.068		0.20
	130		0.083		0.20
	120		0.10		0.20
	110		0.13		0.20
	100		0.16		0.20
	90		0.21		0.20
	80		0.27		0.20
	70		0.36		0.20
	60		0.44		0.20
	50		0.59		0.20
	40		0.71		0.20
	30		0.91		0.20
	20		1.25		0.20
Normal weight solid panels, 140 to 150 pcf, sand and gravel aggregate	145	2		0.13	0.20
		3		0.19	
		4		0.25	
		5		0.31	
		6		0.38	
		8		0.50	
Structural lightweight solid panels	110	2		0.26	0.20
		3		0.38	
		4		0.51	
		5		0.64	
		6		0.76	
		8		1.02	

1 Based on values in the 2005 *ASHRAE Handbook of Fundamentals* and *ANSI/ASHRAE/IESNA Standard 90.1-2007*. Values do not include air film resistances. See Table 5.3.7 for R-values with air film resistances.

Table 5.3.7 R-Values for Solid Concrete and Sandwich Panel Walls[1].

Concrete Density, lb/ft³	t,[2] in.	R-Value of Concrete No Air Films, No Insulation	R-Value of Insulation Resistance, hr·ft²·°F/Btu												
			0 (No ins.)	1	2	3	4	5	6	8	10	12	15	16	18
145	2	0.13	0.98	2.0	3.0	4.0	5.0	6.0	7.0	9.0	11.0	13.0	16.0	17.0	19.0
	3	0.19	1.04	2.0	3.0	4.0	5.0	6.0	7.0	9.0	11.0	13.0	16.0	17.0	19.0
	4	0.25	1.10	2.1	3.1	4.1	5.1	6.1	7.1	9.1	11.1	13.1	16.1	17.1	19.1
	5	0.31	1.16	2.2	3.2	4.2	5.2	6.2	7.2	9.2	11.2	13.2	16.2	17.2	19.2
	6	0.38	1.23	2.2	3.2	4.2	5.2	6.2	7.2	9.2	11.2	13.2	16.2	17.2	19.2
	8	0.50	1.35	2.4	3.4	4.4	5.4	6.4	7.4	9.4	11.4	13.4	16.4	17.4	19.4
110	2	0.25	1.10	2.1	3.1	4.1	5.1	6.1	7.1	9.1	11.1	13.1	16.1	17.1	19.1
	3	0.38	1.23	2.2	3.2	4.2	5.2	6.2	7.2	9.2	11.2	13.2	16.2	17.2	19.2
	4	0.51	1.36	2.4	3.4	4.4	5.4	6.4	7.4	9.4	11.4	13.4	16.4	17.4	19.4
	5	0.64	1.49	2.5	3.5	4.5	5.5	6.5	7.5	9.5	11.5	13.5	16.5	17.5	19.5
	6	0.76	1.61	2.6	3.6	4.6	5.6	6.6	7.6	9.6	11.6	13.6	16.6	17.6	19.6
	8	1.02	1.87	2.9	3.9	4.9	5.9	6.9	7.9	9.9	11.9	13.9	16.9	17.9	19.9

1 Values in table are the total R-values of the walls with concrete of thickness t and insulation R-value as indicated in columns. Only for insulation with no metal or solid concrete penetrating the insulation layer. R-values will be impacted by the presence of these items and additional calculations will be required according to series-parallel or zone method. Air film resistances of 0.68 for inside and 0.17 for outside are included in R-values unless otherwise noted. These are standard air film resistances for winter conditions and are conservative for summer conditions.

2 The thickness, t, is the sum of the thicknesses of the concrete wythes for a sandwich panel wall.

A number of typical concrete wall R-values are given in Tables 5.3.6 and 5.3.7. These wall tables can be applied to sandwich type panels, as well as single wythe panels insulated on one side. The U-factor of the wall is the inverse of the R-value with air film resistances from Table 5.3.7. To use Table 5.3.7, first determine the R-value of the insulation to be used either from Table 5.3.4 or from the insulation manufacturer. Manufacturers of insulation are required by law to provide the R-value of their material.

For concrete walls with metal furring or studs, wall R-values can be determined using Tables 5.3.7 and 5.3.8. Determine the R-value of the concrete portion from Table 5.3.7 and add it to the effective R-value from the insulation/framing layer from Table 5.3.8, page 411.

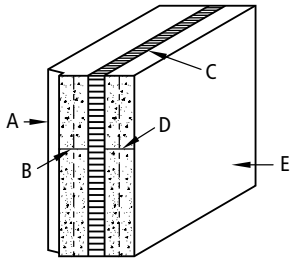

The following design example shows how to calculate R-value and U-factor for a wall using material R-values taken from Tables 5.3.2 through 5.3.7.

The R-value of walls assemblies are generally only calculated for the winter condition since the difference between the summer and winter conditions is small. This example is valid only for insulation with no metal or solid concrete penetrating the insulation layer. R-values will be impacted by the presence of these items and additional calculations will be required according to series-parallel, zone, or characteristic method.

Thermal bridges such as metal wythe connectors

Example 5.3.1 – Calculate R-Value of Wall Assembly.

	Wall Layer	R Winter	R Summer	Table
A.	Surface, outside air film	0.17	0.25	5.3.2
B.	Concrete, 2 in. (145 pcf)	0.13	0.13	5.3.7
C.	EPS insulation (1.25 pcf), 1.5 in.	6.00	6.00	5.3.4
D.	Concrete, 2 in. (145 pcf)	0.13	0.13	5.3.7
E.	Surface, inside air film	0.68	0.68	5.3.2
	Total R =	7.11	7.19	
	U = 1/R	0.14	0.14	

or a full thickness of concrete along sandwich panel edges will reduce the R-value of the wall. The net effect of metal ties is to increase the U-value by 10 to 15 percent, depending on type, size, and spacing. For example, a wall as shown in Fig. 5.3.16 would have a U-value of 0.13 if the effect of the ties is neglected. If the effect of $^1/_4$ in. diameter ties at 16 in. on center is included, U = 0.16; at 24 in. spacing, U = 0.15. Ongoing research indicates these numbers are conservative. As another example, steel ties representing 0.06 percent of an insulated panel area can reduce the panel R-value by 7 percent.[5]

Thermal bridging is minimized by the use of engineered resin, low conductivity wythe connectors in insulated concrete panel construction. These composite material connectors, along with their ability to enable edge to edge insulation coverage in the concrete sandwich panels, can significantly reduce thermal bridging and help the insulation layer to retain up to 99.7 percent of its listed R-value.

Thermal bridges may lead to localized cold areas where surface condensation can occur, particularly where the interior relative humidity is maintained at high levels. This may cause annoying or damaging wet streaks on the wall surface. Icicles have been reported on the interior side of some buildings in cold climates, see Section 5.3.6. In most cases the problem has been traced to excessive air exfiltration through major openings in the wall, often at precast concrete wythe connector locations. Since steel connectors form a high conductivity path, they offer likely locations for condensation to occur. Corrosion protection, stainless steel, or increased thickness of the connector material may provide extended service life for these steel wythe connectors.

The effect of metal tie thermal bridges on the heat transmittance may be calculated by the zone method described in the *ASHRAE Handbook of Fundamentals* although the characteristic method is preferred. With the zone method, the panel is divided into Zone A, which contains the thermal bridge, and Zone B, where thermal bridges do not occur, as shown in Figure 5.3.16. The width of Zone A is calculated as W = m + 2d, where m is the width or diameter of the metal or other conductive bridge material, and d is the distance

5 VanGeem, M. G., "Effects of Ties on Heat Transfer Through Insulated Concrete Sandwich Panel Walls," Proceedings of the *ASHRAE/DOE/BTECC/CIBSE Conference on Thermal Performance of the Exterior Envelopes of Buildings IV*, Orlando, December 1989, ASHRAE, Atlanta, 1989, pp. 206-223. www.ASHRAE.org

Fig. 5.3.16 Metal tie thermal bridges.

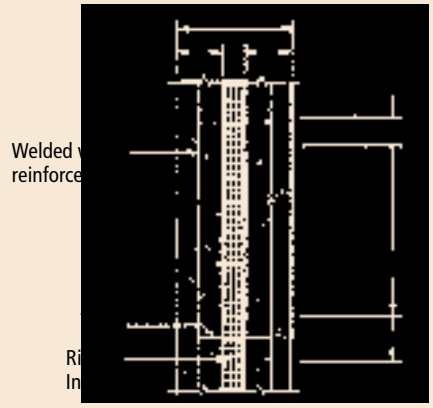

from the panel surface to the metal. After the width (W) and area (A) of Zone A are calculated, the heat transmissions of the zonal sections are determined and converted to area resistances, which are then added to obtain the total resistance (R_t) of that portion of the panel. The resistance of Zone A is combined with that of Zone B to obtain the overall resistance and the gross transmission value U_o, where U_o is the overall weighted average heat transmission coefficient of the panel.

The effect of solid concrete path thermal bridges can be calculated by the characteristic section method. In this method, the panel is divided into two regions. The first region is treated as a perfectly insulated panel without any thermal bridge. The second region is treated as a solid concrete panel without any insulation. The total thermal resistance of the panel is calculated as the resistances of these two regions added together in parallel.

The portion of the panel that is treated as a solid concrete panel without any insulation is larger than the actual solid concrete region that exists in the panel. There is an affected zone around each solid concrete region that is added to the actual area of the solid concrete region to obtain the size of the concrete region used in the calculation. The size of the affected zone E_z is computed as:

$$E_z = 1.4 - 0.1t_{in}\alpha + \left[0.4t_{cf} + 0.1(t_{cb} - t_{cf})\right]\beta$$

Equation 5.3.2

In this equation, t_{in}, t_{cf} and t_{cb} are the thicknesses of the insulation layer, concrete face wythe, and concrete back wythe, respectively. This is an empirical equation with all dimensions expressed in inches. The parameters α and β account for the insulation and concrete conductivity values (k_{in} and k_{con}) that are used to construct the panel. Their values are computed as:

$$\alpha = 1 + 2.25\left(\frac{k_{in} - 0.26}{0.26}\right) \qquad \text{Equation 5.3.3}$$

and

$$\beta = 1 + 1.458\left(\frac{k_{con} - 12.05}{12.05}\right) \qquad \text{Equation 5.3.4}$$

In these equations, k_{in} and k_{con} have units of Btu (in/hr)(ft^2)(°F).

To calculate an R-value, a panel is divided into two regions: a solid concrete region and a perfectly insulated region, as explained previously. E_z is calculated using Equation 5.3.2 and the area of each region is then calculated. The thermal resistance of the solid concrete region (R_s) is then added in parallel with the thermal resistance of the perfectly insulated region (R_p) to obtain the thermal resistance of the panel R:

$$\frac{1}{R} = \frac{A'_s}{R_s} + \frac{A'_p}{R_p} \qquad \text{Equation 5.3.5}$$

A'_s and A'_p represent the areas of the solid concrete region (A_s) and perfectly insulated panel region (A_p) divided by the total panel area A_t (i.e. $A'_s = A_s/A_t$, $A'_p = A_p/A_t$). The procedure is illustrated in Example 5.3.2.

Where:

A_p = area of insulated panel zone

A_s = area of solid concrete zone

A_t = total area of panel

A' = portion of each zone

A'_p = portion of insulated panel zone

A'_s = portion of solid concrete zone

E_z = affected zone

k_{con} = conductivity of concrete

k_{in} = conductivity of insulation

t_{cb} = thickness of back concrete wythe

t_{cf} = thickness of face concrete wythe

Example 5.3.2 Determination of R-value for sandwich panel.

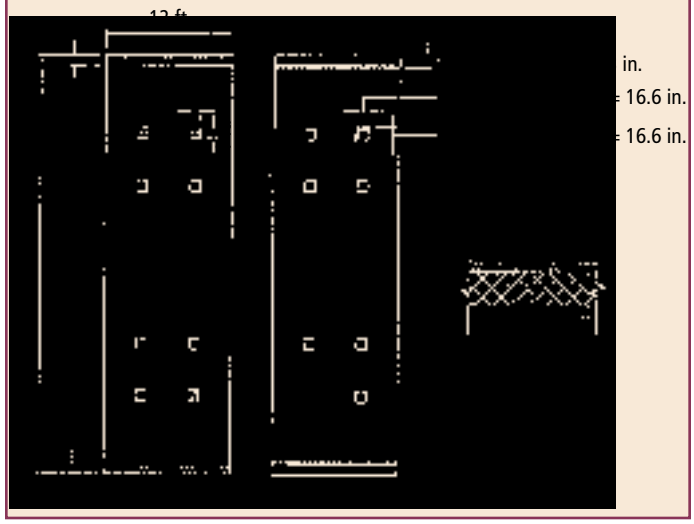

t_{in} = thickness of insulation layer

α = insulation conductivity coefficient factor

β = concrete conductivity coefficient factor

Problem:

Determine the R-value for the sandwich panel shown above for conductivities of 10.0 Btu·(in./hr)·(ft^2)°F and 0.15 Btu·(in./hr)·(ft^2)(°F) for the concrete and insulation, respectively. Face and back wythe thicknesses are 3 in., and the insulation layer thickness is 2 in.

Solution:

Calculate the parameters α and β:

$$\alpha = 1 + 2.25\left(\frac{k_{in.} - 0.26}{0.26}\right) = 1 + 2.25\left(\frac{0.15 - 0.26}{0.26}\right) = 0.05$$

$$\beta = 1 + 1.458\left(\frac{k_{con} - 12.05}{12.05}\right) = 1 + 1.458\left(\frac{10.00 - 12.05}{12.05}\right)$$
$$= 0.75$$

From the panel thicknesses, the affected zone dimension E_z is computed as:

$E_z = 1.4 - 0.1(t_{in})(\alpha) + [0.4t_{cf} + 0.1(t_{cb} - t_{cf})]\,\beta$

$E_z = 1.4 - 0.1(2)(0.05) + 0.4(3)(0.75)$

$E_z = 2.3$ in.

Add E_z to the actual solid concrete areas to obtain the areas of the panel to treat as solid concrete (shown as dashed lines above).

Calculate the areas of the panel (A_t), solid concrete region (A_s), and perfectly insulated region (A_p):

A_t = panel area = (40 ft)(12 ft) = 480 ft^2 = 69,120 in.^{2}

A_s = concrete area = 2(14.3)(144) + 8(16.6)(16.6) = 6,323 in.^{2}

A_p = insulated area = 69,120 – 6,323 = 62,797 in.^{2}

This resistance of that portion of the panel that is treated as perfectly insulated is calculated from the resistances of the concrete, insulation, and surfaces in series.

The resistance of that portion of the panel that is treated as solid concrete is calculated from the resistances of the concrete and surfaces in series.

Calculate the fractional areas of the panel that are treated as solid concrete and as insulated:

Insulated Path.

		k	Thickness	U = k/t	R = 1/U Winter	R = 1/U Summer
A	Outside surface	—	—	—	0.17	0.25
B	Concrete	10.00	3	3.33	0.30	0.30
C	Insulation	0.20	2	0.10	10.00	10.00
D	Concrete	10.00	3	3.33	0.30	0.30
E	Inside surface	—	—	—	0.68	0.68
	Total				11.45	11.53

A_s/A_t = 6323/69120 = 0.091

A_p/A_t = 62797/69120 = 0.909

Concrete Path.

		k	Thickness	U = k/t	R = 1/U Winter	R = 1/U Summer
A	Outside surface	—	—	—	0.17	0.25
B	Concrete	10.00	8	1.25	0.80	0.80
C	Insulation	—	—	—	0.68	0.68
	Total				1.65	1.73

Compute the R-value of the panel treating the solid concrete and perfectly insulated regions in parallel.

$$\frac{1}{R} = \frac{0.909}{11.45} + \frac{0.091}{1.65} \qquad \frac{1}{R} = \frac{0.909}{11.53} + \frac{0.091}{1.73}$$

Winter: R = 7.43 hr · ft^2 · °F/Btu

Summer: R = 7.61 hr · ft^2 · °F/Btu

ASHRAE Standard 90.1 also recognizes the detrimental thermal bridging effects of steel framing within walls. For example, ASHRAE specifies an effective insulation/framing R-value of 5.1 for R13 insulation in a 4 in. metal stud cavity for concrete wall construction. For the effects of other metal framing depths and insulation R-values in precast concrete walls see Table 5.3.8.

5.3.4 Heat Capacity

Heat Capacity (HC) is used in energy codes to determine when a wall has enough thermal mass to use the mass criteria or mass credit. Heat capacity is the ability to store heat per unit area of wall area and includes all layers in a wall. For a single layer wall, HC is calculated by multiplying the density of the material by its thickness times the specific heat of the material. Heat capacity for a multilayered wall is the sum of the heat capacities for each layer. The heat capacity of non-concrete layers is generally small and can typically be ignored in calculations.

Specific heat describes a material's ability to store heat energy. As a material absorbs energy, its temperature rises. A material with a high specific heat, such as water, can absorb a great deal of heat energy per pound of material, with little rise in temperature. The same weight of a material with low specific heat, such as steel or copper, rises to higher temperatures with only a small quantity of heat absorbed. Because specific heat defines the relationship between heat energy and temperature for a given weight of material, it can also be used to determine the change in temperature for a material as it absorbs or releases energy. Specific heat is defined as the quantity of heat energy in Btus required to raise the temperature of one pound of a material by 1°F. The specific heat of concrete can generally be assumed to be 0.2 Btu/lb·°F. Specific heat of selected other materials is provided in Table 5.3.4.

Energy codes generally require a heat capacity greater than 6 Btu/ft^2·°F in order to use mass

Table 5.3.8 Effective R-Values for Walls with Insulation in Cavity between Metal Furring or Studs[1].

Depth of framing and cavity, (in.)	Rated R-value of insulation												
	0	1	2	3	4	5	6	7	8	9	10	11	12
	Effective R-value if continuous insulation uninterrupted by framing (includes gypsum board)												
	0.5	1.5	2.5	3.5	4.5	5.5	6.5	7.5	8.5	9.5	10.5	11.5	12.5
	Effective R-value if insulation is installed in cavity between metal framing (includes gypsum board)												
0.5	0.9	0.9	1.1	1.1	1.2	na	na	na	na	na	na	na	na
0.8	1	1	1.3	1.4	1.5	1.5	1.6	na	na	na	na	na	na
1.0	1	1.1	1.4	1.6	1.7	1.8	1.8	1.9	1.9	na	na	na	na
1.5	1.1	1.2	1.6	1.9	2.1	2.2	2.3	2.4	2.5	2.5	2.6	2.6	2.7
2.0	1.1	1.2	1.7	2.1	2.3	2.5	2.7	2.8	2.9	3	3.1	3.2	3.2
2.5	1.2	1.3	1.8	2.3	2.6	2.8	3	3.2	3.3	3.5	3.6	3.6	3.7
3.0	1.2	1.3	1.9	2.4	2.8	3.1	3.3	3.5	3.7	3.8	4	4.1	4.2
3.5	1.2	1.3	2	2.5	2.9	3.2	3.5	3.8	4	4.2	4.3	4.5	4.6
4.0	1.2	1.3	2	2.6	3	3.4	3.7	4	4.2	4.5	4.6	4.8	5
4.5	1.2	1.3	2.1	2.6	3.1	3.5	3.9	4.2	4.5	4.7	4.9	5.1	5.3
5.0	1.2	1.4	2.1	2.7	3.2	3.7	4.1	4.4	4.7	5	5.2	5.4	5.6
5.5	1.3	1.4	2.1	2.8	3.3	3.8	4.2	4.6	4.9	5.2	5.4	5.7	5.9

Depth of framing and cavity, (in.)	Rated R-value of insulation												
	13	14	15	16	17	18	19	20	21	22	23	24	25
	Effective R-value if continuous insulation uninterrupted by framing (includes gypsum board)												
	13.5	14.5	15.5	16.5	17.5	18.5	19.5	20.5	21.5	22.5	23.5	24.5	25.5
	Effective R-value if insulation is installed in cavity between metal framing (includes gypsum board)												
0.5	na	na	na	na	na	na	na	na	na	na	na	na	na
0.8	na	na	na	na	na	na	na	na	na	na	na	na	na
1.0	na	na	na	na	na	na	na	na	na	na	na	na	na
1.5	na	na	na	na	na	na	na	na	na	na	na	na	na
2.0	3.3	3.3	3.4	3.4	na	na	na	na	na	na	na	na	na
2.5	3.8	3.9	3.9	4	4	4.1	4.1	4.1	na	na	na	na	na
3.0	4.3	4.4	4.4	4.5	4.6	4.6	4.7	4.7	4.8	na	na	na	na
3.5	4.7	4.8	4.9	5	5.1	5.1	5.2	5.2	5.3	5.4	5.4	5.4	5.5
4.0	5.1	5.2	5.3	5.4	5.5	5.6	5.7	5.8	5.8	5.9	5.9	6	6
4.5	5.4	5.6	5.7	5.8	5.9	6	6.1	6.2	6.3	6.4	6.4	6.5	6.6
5.0	5.8	5.9	6.1	6.2	6.3	6.5	6.6	6.7	6.8	6.8	6.9	7	7.1
5.5	6.1	6.3	6.4	6.6	6.7	6.8	7	7.1	7.2	7.3	7.4	7.5	7.6

1 ASHRAE 90.1-2007, www.ASHRAE.org

wall criteria. These criteria generally allow a lower wall R-value. The *ANSI/ASHRAE/IESNA Standard 90.1-2007* requires a heat capacity greater than 7 Btu/ft^2·°F, except lightweight concrete walls with a unit weight not greater than 120 pcf need only have a heat capacity of 5 Btu/ft^2·°F or greater. Table 5.3.9 provides heat capacities of concrete walls. These walls meet the minimum requirements for mass wall criteria in almost all cases.

Table 5.3.9 Heat Capacity of Concrete.

Concrete Thickness, in.	Heat Capacity, Btu/ft²·°F	
	145 pcf	110 pcf
3	7.2	5.5
4	9.6	7.3
5	12.0	9.2
6	14.4	11.0
7	16.8	12.8
8	19.2	14.6
9	21.6	16.5
10	24.0	18.3
11	26.4	20.2
12	28.8	22.0

ASHRAE 90.1-2007, www.ASHRAE.org

5.3.5 Thermal Mass

The thermal mass provided by concrete buildings saves energy in many climates. Thermal mass shifts peak loads to a later time and reduces peak energy requirements for building operations. Laboratory, analytical, and field studies support this concept. Thermal resistance (R-values) and thermal transmittance (U-factors), discussed in Section 5.3.3, do not take into account the effects of thermal mass, and by themselves, are inadequate in describing the heat transfer properties of construction assemblies with significant amounts of thermal mass.

As previously discussed, common thermal properties of construction materials and air spaces are based on steady state tests, which measure the heat that passes from the warm side to the cool side of the test specimen. Thermal transmittance (U-factor) and its reciprocal, overall R-value is generally considered the most significant indication of heat gain because low mass buildings constructed of metal or wood frame have heat losses proportional to the overall area-weighted U-factor of the building envelope (walls and roof). Also, U-factors and R-values are relatively easy to calculate since they are based on steady-state conditions.

However, the steady-state condition is rarely realized in actual practice. External conditions (temperatures, position of the sun, presence of shadows, etc.) vary throughout a day, and heat gain is not instantaneous through most solid materials, resulting in the phenomenon of time lag (thermal inertia). As temperatures rise on one side of a wall, heat begins to flow toward the cooler side. Before heat transfer can be achieved, the wall must undergo a temperature increase. The thermal energy necessary to achieve this increase is related to heat capacity.

Due to its density, concrete has the capacity to absorb and store large quantities of heat. This thermal mass allows concrete to react very slowly to changes in outside temperature. This characteristic of thermal mass reduces peak heating and cooling loads and delays the time at which these peak loads occur by several hours (Fig. 5.3.17[a]). Mass effects vary with climate, building type, orientation, position of mass within the wall, and other factors, so quantifying their effects is more challenging than calculating R-values. Mass effect, glass area, air infiltration, ventilation, building orientation, exterior color, shading or reflections from adjacent structures, surrounding surfaces or vegetation, building shape, number of stories, wind direction, and speed all affect energy use.

Analytical and experimental studies have shown that the use of materials with thermal mass in buildings reduces heating and cooling peak loads, and thus reduces equipment size compared with buildings constructed with lightweight materials. Small HVAC equipment that runs continuously uses less energy than large equipment that is run intermittently as it responds to peak loads. By lowering peak loads, energy is saved. Peak cooling loads in office buildings are often in midafternoon. Properly designed thermal mass can shift a portion of the load and undesireable heat gain from midafternoon until later when the building is unoccupied or when peak load electricity costs are less. Also thermal mass on the interior building surface will help absorb heat gains in the office space.

Energy use differences between light and heavy materials are illustrated in the hour-by-hour computer analyses shown in Fig. 5.3.17. Fig. 5.3.17(a) compares the heat flow through three walls having the same U-factor, but made of different materials. The concrete wall consisted of a layer of insulation sandwiched between inner and outer wythes of 2 in. concrete with a combined weight of 48.3 psf. The metal wall, weighing 3.3 psf, had insulation sandwiched between an exterior metal panel and $^1/_2$ in. drywall. The wood frame wall weighed 7.0 psf and had wood siding on the outside, insulation between 2 × 4 studs, and $^1/_2$-in. drywall

Fig. 5.3.17(a-c) Heating and cooling load comparisons.

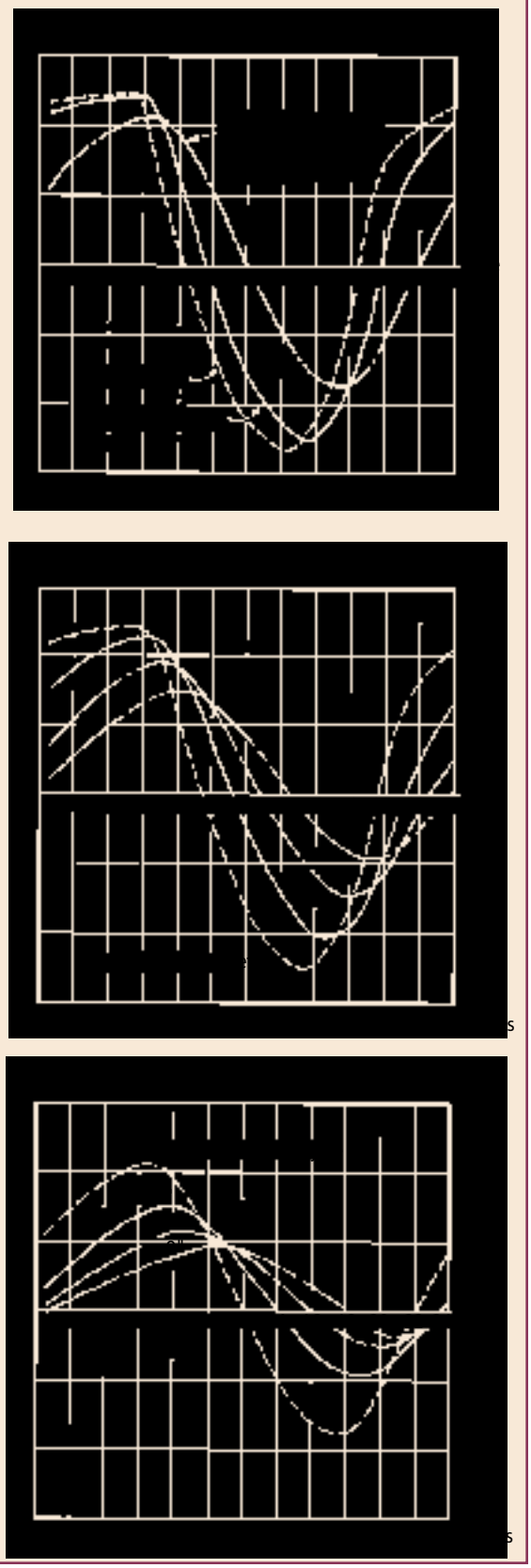

on the inside. The walls were exposed to simulated outside temperatures that represented a typical spring day in a moderate climate. The massive concrete wall had lower peak loads by about 13 percent for heating and 30 percent for cooling than the frame or non-mass walls. Actual results for buildings depend on the location, time of year, and building design.

Concrete walls of various thicknesses that were exposed to the same simulated outside temperatures are compared in Fig. 5.3.17(b). The walls had a layer of insulation sandwiched between concrete on the outside and $^1/_2$ in. drywall on the inside; U-factors were the same. The figure shows that the more massive the wall, the lower the peak loads and the more the peaks were delayed.

Fig. 5.3.17(c) compares concrete sandwich panels having an outer wythe of 2 in., various thicknesses of insulation, and various thicknesses of inner wythes. All walls had U-factors of 0.091 and were exposed to the same simulated outside temperatures. The figure shows that by increasing the thickness of the inner concrete wythe, peak loads were reduced and delayed.

ASHRAE Standard 90.1 acknowledges the thermal mass benefits of concrete walls in specifying lower minimum insulation R-value and higher maximum wall U-factors for mass (concrete) wall construction. For example, in a region with 5401-7200 heating degree days base 65°F (HDD65 [Chicago]), the minimum R-value for concrete wall insulation is R 7.6ci (ci = continuous insulation) and for steel framed walls the minimum R-value for the wall insulation is R 13 + R 3.8 ci. For the same region the maximum wall U-factor for concrete walls is 0.123 and for steel framed walls the maximum U-factor is 0.084.

In fact, research conducted by Oak Ridge National Laboratory (ORNL) on the computer modeling and simulation of dynamic thermal performance of insulated concrete walls versus traditional wood frame shows that insulated concrete sandwich walls constructed with composite connector technology utilizes the thermal mass effect of concrete to create an "equivalent wall performance R-value" several times greater than what is estimated by a traditional material R-value calculation.[6] In this study, six climates were evaluated – Atlanta, Denver, Miami, Minneapolis, Phoenix, and Washington, D.C. Of these cities, the difference was most dramatic

6 *"Thermal Performance of Prefabricated Concrete Sandwich Wall Panels,"* J. Kosny, P. Childs and A. Desjarlais, Oak Ridge National Laboratory Buildings Technology Center, October 2001

in Phoenix, where a comparable R-value of conventional wood frame exterior wall would need to be 2.9 times higher than the steady state R-value of an insulated concrete sandwich panel wall to produce the same energy loads. Therefore a comparative wood frame wall R-value would need to have an R 31 to achieve the same effect as an R 11 insulated concrete sandwich panel wall constructed with composite connector technology.

Energy saving benefits of thermal mass are most pronounced when the outside temperature fluctuates above and below the balance temperature of the building, causing a reversal of heat flow within the wall. The balance point is generally between 50 and 70°F, depending on the internal gains due to people, equipment and solar effects. These ideal conditions for thermal mass exist on a daily basis at all locations in the

Table 5.3.10 (a) Design Considerations for Building with High Internal Heat Gains[1].

Climate Classification		Relative Importance of Design Considerations[2]						
		Thermal Mass	Increase Insulation	External Fins[3]	Surface Color		Daylighting	Reduce Infiltration
					Light	Dark		
Winter								
Long heating season (6000 degree days or more)	With sun and wind[4,5]	1	2	2		2	3	3
	With sun without wind	1	2			2	3	3
	Without sun and wind		2			1	3	3
	Without sun with wind	1	2	2		1	3	3
Moderate heating season (3000–6000 degree days)	With sun and wind	2	2	1		1	2	2
	With sun without wind	2	2			1	2	2
	Without sun and wind	1	2				2	2
	Without sun with wind	1	2	1			2	2
Short heating season (3000 degree days or less)	With sun and wind	3	1				1	1
	With sun without wind	3	1				1	1
	Without sun and wind	2	1				1	1
	Without sun with wind	2	1				1	1
Summer								
Long cooling season (1500 hr. at 80 °F)	Dry or humid	3		3	3		2	3
Moderate cooling season (600–1500 hr. at 80 °F)	Dry or humid	3		2	2		2	3
Short cooling season (Less than 600 hr. 80 °F)	Dry or humid	2		1	1		2	3

1 Includes office buildings, factories, and commercial buildings.

2 Higher numbers indicate greater importance.

3 Provide shading and protection from direct wind.

4 With sun: sunshine during at least 60% of daylight time.

5 With wind: average wind velocity over 9 mph.

IMPORTANCE RATING KEY
3 High
2 Medium
1 Low

United States and Canada during at least some months of the year. Thermal mass is most effective in conserving energy in the sun-belt regions in the Southern and Western United States, because these daily temperature fluctuations occur throughout the year. Thermal mass also works well when daily temperatures have large variations between the daytime high and nighttime low and when outdoor air can be used for nighttime ventilation. These conditions are most prevalent in the western states. Designs employing thermal mass for energy conservation should be given a high priority in these areas.

Another factor affecting the behavior of thermal mass

Table 5.3.10 (b) Design Considerations for Building with Low Internal Heat Gains[1].

Climate Classification		Relative Importance of Design Considerations[2]					
		Thermal Mass	Increase Insulation	External Fins[3]	Surface Color		Reduce Infiltration
					Light	Dark	
Winter							
Long heating season (6000 degree days or more)	With sun and wind[4,5]		3	2		3	3
	With sun without wind		3			3	3
	Without sun and wind		3			2	3
	Without sun with wind		3	2		2	3
Moderate heating season (3000–6000 degree days)	With sun and wind	1	2	1		2	3
	With sun without wind	1	2			2	3
	Without sun and wind		2			1	3
	Without sun with wind	1	2	1		1	3
Short heating season (3000 degree days or less)	With sun and wind	2	1			1	2
	With sun without wind	2	1			1	2
	Without sun and wind	1	1				2
	Without sun with wind	1	1				2
Summer							
Long cooling season (1500 hr. at 80 °F)	Dry[6] or humid[7]	3		2	2		3
Moderate cooling season (600–1500 hr. at 80 °F)	Dry	2		1	1		2
	Humid	2		1	1		3
Short cooling season (less than 600 hr. at 80 °F)	Dry or humid	1					1

1 Includes low-rise residential buildings and some warehouses.

2 Higher numbers indicate greater importance.

3 Provide shading and protection from direct wind.

4 With sun: sunshine during at least 60% of daylight time.

5 With wind: average wind velocity over 9 mph.

6 Dry: daily average relative humidity less than 60% during summer.

7 Humid: daily average relative humidity greater than 60% during summer.

IMPORTANCE RATING KEY
3 High
2 Medium
1 Low

is the availability of internal heat gains. This includes heat generated inside the building by lights, equipment, appliances and people. It also includes heat from the sun entering through windows. Generally, during the heating season, benefits of thermal mass increase with the availability of internal heat gains; Tables 5.3.10(a) and 5.3.10(b) may be used as a guide. Thus, office buildings which have high internal heat gains from lights, people, and large glass areas represent an ideal application for thermal mass designs. This is especially true if the glass has been located to take maximum advantage of the sun. During the cooling season, thermal mass "coupled" or exposed to the building occupied spaces will absorb internal gains, thereby shifting the peak cooling periods. Concrete exposed to the interior and not covered by insulation and gypsum wallboard is best able to absorb internal gains, thereby saving cooling energy.

The first phase of a botanical center used the high mass characteristics of precast concrete to store heat and stabilize temperatures (Fig. 5.3.18). The walls consist of 12-in. sandwich panels having a 3-in. outer wythe, 3 in. of insulation, and a 6 in. inner wythe resulting in an R-value of 16. The inside 6 inch layer of concrete provided approximately 480,000 pounds of mass for storage of passive solar heat. The high mass radiates heat back into the structure in the late afternoon and evening. Precast concrete was also used for its light color and its ability to reflect sunlight into the garden area.

Only computer programs such as DOE-2[7], Energy-10[8], and EnergyPlus[9] that take into account *hourly* heat transfer on an annual basis (8760 hours) are adequate

7 DOE-2 http://simulationresearch.LBL.gov
8 Energy-10, www.sbicouncil.org
9 Energy Plus, www.energyplus.gov.

Fig. 5.3.18
Quad City Botanical Center, Rock Island, Illinois; Architect: Change-Environmental Architecture; Photo: Dale Photographics, Inc.

in determining energy loss in buildings with mass walls and roofs.

Building codes and standards provide prescriptive and performance paths for meeting requirements using thermal mass. Prescriptive paths have required minimum or maximum values in easy-to-use tables for each building component. Generally, R-value requirements for mass walls are less than those for wood or steel frame walls. To obtain a range of R-values, the precast concrete walls may have insulation applied to the interior or the insulation may be fully incorporated into a sandwich wall panel.

Performance paths are used to trade one energy saving measure for another. For instance, if the wall insulation does not meet the prescriptive requirements, but the ceiling insulation exceeds the prescriptive requirements, then using a performance method may show compliance of the whole building with the code. Prescriptive paths are commonly used for typical buildings in states with newly adopted codes. Once designers become familiar with performance software, these become more popular. Some performance methods can be used to show energy savings beyond code, and are used for sustainability programs or state tax credits.

The performance paths in energy codes generally allow the use of an easy-to-use computer trade-off program or a detailed energy budget method. Generally the more complicated the compliance tool, the more flexibility the designer is allowed. Trade-off tools also allow for innovation in design and materials. ENVSTD is an easy-to-use program for determining compliance of the building envelope of commercial buildings with ASHRAE 90.1. COMcheck-EZ™ (www.EnergyCodes.gov) is an easy-to-use program for determining commercial building compliance for ASHRAE 90.1, IECC (www.IccSafe.org) and many state codes.

COMcheck-Plus™ is a more detailed program using the whole building approach to determine compliance. This program is useful when buildings have special features such as large skylight areas. A detailed computer-based energy analysis program such as DOE2 or Energy Plus calculate yearly energy consumption for a building on an hourly basis. Such programs are useful when using the energy budget method because other simpler compliance tools do not take into account special features of the building or its components. The energy budget method compares the annual energy use of a building that meets prescriptive requirements with the proposed building to determine compliance. Codes provide rules and guidelines for the energy budget method. All of these performance path methods incorporate thermal mass effects.

Energy codes often specify insulation requirements for mass walls based on whether the insulation is on the interior of the wall, integral or on the exterior. Interior insulation isolates the mass from the interior, reducing the ability of the thermal mass to moderate the indoor temperature. Integral insulation refers to thermal mass on both sides of the insulation, as with an insulated sandwich panel wall. It should be noted that regardless of insulation placement, insulated mass walls combine the benefits of insulation and mass and are often quite energy efficient.

5.3.6 Condensation Control

Moisture which condenses on the interior of a building is unsightly and can cause damage to the building and its contents. Even more undesirable is the condensation of moisture within a building wall where it is not readily noticed until damage has occurred. Moisture accumulation can cause wood to rot and metal to corrode.

Fungi and biological growth such as molds have the potential to grow in the presence of moisture or at relative humidities on the wall surface of 70% or higher. In general a favorable combination of the following conditions are required for growths to germinate, sprulate, and grow:

1. Fungal spores settling on the surface
2. Oxygen availability
3. Optimal temperatures (40 to 100°F)
4. Nutrient availability
5. Moisture (liquid or vapor above 70%RH)

Although concrete does not provide nutrients for mold growth, nutrients may be abundant as dirt and dust particles on the surface of the concrete. The first four conditions are met in almost every building. So, the primary method in controlling biological growth is to avoid high humidities and surface condensation. The key is to manage moisture by adhering to sound construction practices that minimize the potential for condensation.

Guidance in this chapter to eliminate condensation and prevent mold is from three recognized sources.[10, 11, 12] and can be summarized as follows

1. Increase surface temperature or reduce moisture level in the air.
2. Install a vapor retarder or vapor resistant material on the inside of insulation in cold climates.
3. Install a vapor resistant material on the outside of insulation in warm climates.
4. Prevent or reduce air infiltration.
5. Prevent or reduce rainwater leakage.
6. Pressurize or depressurize the building, depending on the climate, so as to prevent warm, moist air from entering the building envelope.

Good quality concrete is not damaged by moisture-concrete walls actually gain strength if they stay moist.

5.3.6.1 Climates

Causes of condensation are predominantly climate dependent. The first cause occurs when outside conditions are cold and is due to moist interior air condensing on cold surfaces; locations with these conditions will be called "cold." The second cause occurs when outside conditions are warm and humid and is due to humid air entering the building and condensing on cooler surfaces; locations with these conditions will be called "warm." Generally either of these conditions requires weeks rather than a few days for problems to occur. Some locations experience long enough warm and cold seasons to develop both types of condensation; these climates will be called "mixed."

Buildings in drier climates generally have less condensation problems than those in more humid climates. Generally the U.S. can be divided into humid and dry by a north-south line drawn through the center of the state of Texas. Areas east are humid and those west are dry. The exception is the northwest, where the coast of Washington and Oregon are also humid; these locations are called "marine." In drier climates, moisture that gets on or into walls will tend to dry to the inside and outside more readily than in more humid climates. For instance, when The Disney Company built Disney World in Orlando in the 1970s, many of the structures were constructed of the same painted wood construction and practices prevalent in Disneyland in southern California. These structures did not hold up well in the warm humid climate of central Florida.

However, even though buildings are more forgiving in drier climates, condensation has the potential to occur in warm, cold, or mixed climates if walls are not properly designed.

The different climate types are defined on the map in Fig. 5.3.19 and described in Table 5.3.11.

5.3.6.2 Sources of moisture

Moisture can enter building walls from the interior, exterior, soil, or the building materials themselves.

Interior sources of moisture include people, kitchen and restroom facilities, and industrial processes. The average person produces 2.6 pints per day through respiration and perspiration. This amount increases with physical activity. Nearly all of the water used for indoor plants enters the indoor air. Five to seven small plants release 1 pint per day of water. In residential facilities, a shower can contribute 0.3 pints per minute and a kitchen 5 pints per day for a family of four. Active vents that remove moist indoor air to the outdoors should be provided in showers and kitchens.

Industrial processes, storage of moist materials, swimming pools, commercial laundries, kitchens, and ice rinks all contribute to indoor sources of moisture. Buildings with these conditions should be designed for the particular moisture conditions anticipated. In all cases, guidelines of ANSI/ASHRAE Standard 62[13] should be followed for proper ventilation of indoor air.

Outdoor sources include precipitation and infiltration. Rain and melting snow cause problems when the ground against walls is not pitched to move water away, or when plants that require frequent watering are located near walls. Vegetation near buildings should be able to survive without watering or a buffer area of decorative gravel can be placed. Landscaping

10 *ASHRAE Handbook of Fundamentals* - 2001, American Society of Heating, Refrigerating, and Air-Conditioning Engineers, Atlanta, GA, Chapters 23, 24, and 25. www.ASHRAE.org

11 Treschsel, Heinz, *Moisture Control in Buildings*, Publication No. MNL 18, ASTM, West Conshohocken, PA, 1994. www.ASTM.org

12 Treschsel, Heinz, *Moisture Analysis and Condensation Control in Building Envelopes*, Publication No. MNL 40, ASTM, West Conshohocken, PA, 2001. www.ASTM.org

13 *ANSI/ASHRAE Standard 62-2001 – Ventilation for Acceptable Indoor Air Quality*, American Society of Heating, Ventilating, and Air-Conditioning Engineers (ASHRAE), Atlanta. http://www.ashrae.org

Fig. 5.3.19 Climate zones for moisture.

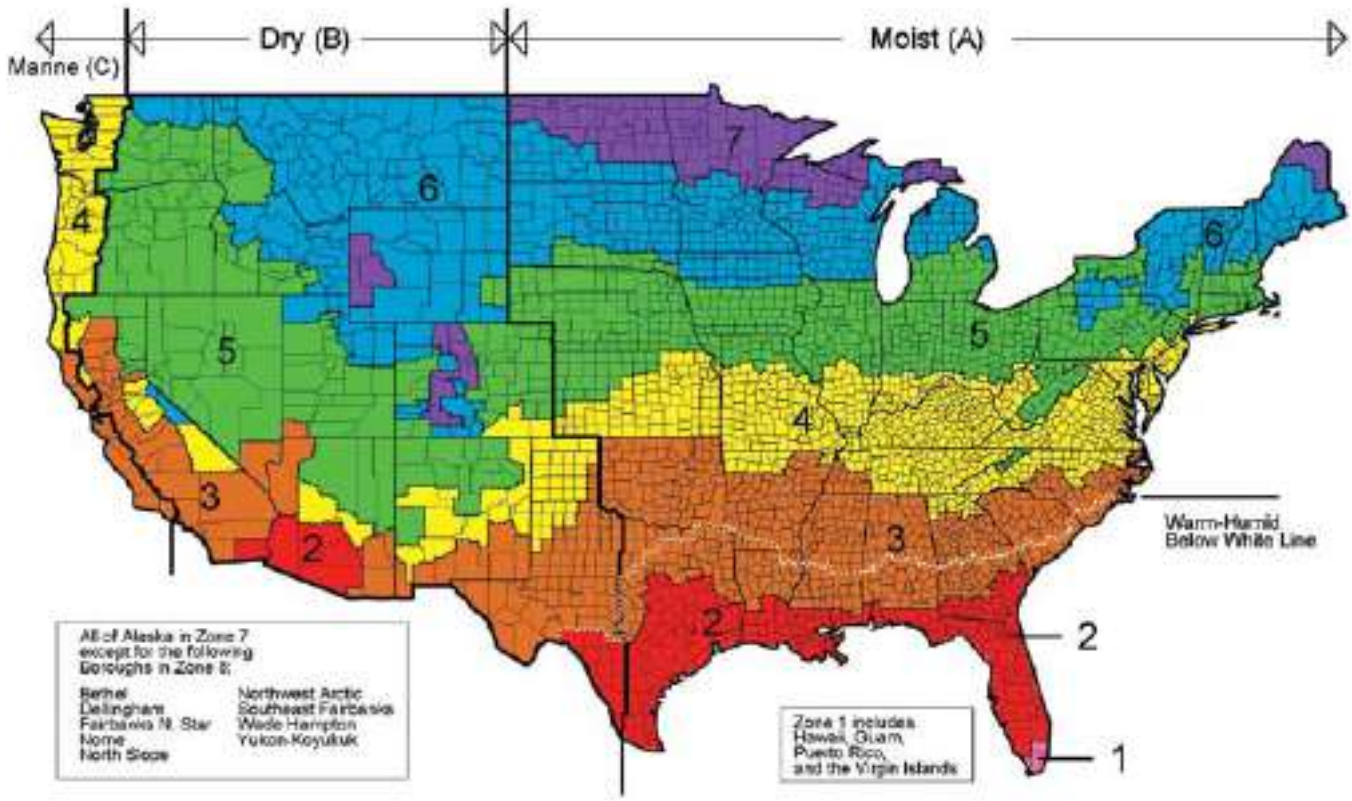

ASHRAE 90.1-2007

Table 5.3.11 Climate Zones for Moisture.

Zone No.	Description	Representative U.S. Cities
1A, 2A, and 3A south of the humid line	Warm, humid	Miami, FL; Houston, TX
2B	Warm, dry	Phoenix, AZ
3A north of the humid line, 4A	Mixed, humid	Memphis, TN; Baltimore, MD
3B, 3C, 4B	Mixed, dry	El Paso, TX; San Francisco, CA; Albuquerque, NM
4C*	Cool, marine	Salem, OR
5A, 6A*	Cold, humid	Chicago, IL; Burlington, VT;
5B, 6B*	Cold, dry	Boise, ID; Helena, MT
7*	Very cold	Duluth, MN
8*	Subarctic	Fairbanks, AK

*For Canadian locations, climate zones are defined on the basis of Heating Degree Days Base 65 °F (HDD65F):
Zone 4C: 3600 < HDD65F ≤ 5400
Zone 5: 5400 < HDD65F ≤ 7200
Zone 6: 7200 < HDD65F ≤ 9000
Zone 7: 9000 < HDD65F ≤ 12,600
Zone 8: 12,600 < HDD65F

near buildings has led to automatic sprinkler systems that "water" building walls. Moisture from precipitation should be controlled to prevent it from entering the walls or building. A primary and secondary line of defense should always be provided. For instance if joint sealant is used to prevent precipitation from entering a wall, a second line of joint sealant should be provided behind the first to keep out moisture should the first deteriorate.

Infiltration of moist air is caused by several sources. Due to the stack effect in buildings (warm air rises), outdoor air enters the building through cracks and joints near the bottom of the building and exits near the top. This effect is greater for taller buildings. Also, heating and cooling systems should have adequate air intake systems. Otherwise when the system is operating and exhausting air, it will depressurize the building and air can be drawn into the building through cracks, joints, and building materials. When the moisture content of outdoor air is greater than the indoor air, for example in warm humid climates, infiltration and depressurization bring moisture into the building. Moist air also enters the building through cracks, joints, and building materials when the vapor pressure of the outdoor air is greater than the indoor air. Again, this occurs on warm humid days or cooler days with high relative humidity.

Soil has the potential to provide a continuous supply of moisture to concrete through slabs and foundations. Capillary breaks between the foundation and above grade walls can reduce this potential. The ground should be sloped away from buildings and adequate drainage and waterproofing should be provided. As land becomes more scarce and costly, more buildings are being built on less desirable sites that previously ponded water; drainage must be properly considered in these areas. Also, any water draining from adjacent sites onto the subject building site needs to be properly channeled away from buildings. Vapor retarders should be installed beneath all concrete floor slabs in direct contact with the concrete to prevent moisture from moving up into the building. The vapor retarder should be installed above a granular subbase layer and directly beneath the concrete slab.

Building materials contribute significantly to moisture inside buildings, known as "moisture of construction," during the first years after construction. Concrete contributes significant moisture since it starts as a saturated material. Precast concrete dries during storage and continues to dry in the built structure until the pores near the surface reach an equilibrium moisture content with the indoor air. Wood and materials stored outdoors are also contributors. Many buildings have noticeable condensation the first year after construction that will subside in subsequent years. Dehumidification and adequate ventilation can help alleviate condensation due to moisture of construction.

5.3.6.3 Condensation on surfaces

Causes. Condensation occurs on surfaces inside buildings when the surface temperature is less than the dew point of the indoor air. The dew point of the air depends on its relative humidity. Dew-point temperatures to the nearest °F for various temperatures and relative humidities are shown in Table 5.3.12. In the summer in humid climates the relative humidity (RH) of the indoor air is generally in the range of 50 to 80%. In the winter in cold climates the relative humidity of the indoor air is generally in the range of 20 to 40%.

Relative humidity is the ratio of the amount moisture in the air to the amount of moisture the air can hold (saturation). Colder air holds less moisture. In climates like Chicago the average relative humidity outdoors averages approximately 70%. Yet, the amount of moisture in the outdoor air is much less in the winter because the air holds less moisture. When this drier air is brought inside and heated up, the resulting relative humidity at 70°F is low; often in the range of 15 to 25%.

Example 5.3.3 – Condensation on a beverage can. Condensation may occur on a beverage can inside of a 75°F building during the summer, but not at the same temperature in the winter. In the summer at 75°F and 80%RH, the dew point is 68°F. If the temperature of the can is less than 68°F, condensation will occur on the can. In winter at 75°F and 30%RH, the dew point is 42°F. If the can is less than 42°F condensation will occur on the can. Also, at the low RH in the winter, moisture that would condense on the can will evaporate quickly and may not be noticed.

Condensation on surfaces occurs most frequently due to cool indoor surface temperatures or high indoor humidity levels. These can be the result of many factors:

1. Inadequate heating and ventilation can result in

Table 5.3.12 Dew-Point Temperatures[1].

Dry Bulb or Room Temperature, °F	Relative Humidity (RH), %									
	10	20	30	40	50	60	70	80	90	100
40	-8	5	13	19	24	28	31	34	37	40
45	-4	9	17	23	28	32	36	39	42	45
50	-1	13	21	27	32	37	41	44	47	50
55	3	17	25	31	37	41	45	49	52	55
60	6	20	29	36	41	46	50	54	57	60
65	10	24	33	40	46	51	55	59	62	65
70	13	28	37	45	51	55	60	64	67	70
75	17	31	42	49	55	60	65	68	72	75
80	20	36	46	54	60	65	69	73	77	80
85	24	39	50	58	64	70	74	78	82	85
90	27	44	54	62	69	74	79	83	87	90

1 Temperatures are based on a barometric pressure of 29.92 in. Hg.

cooler surface temperatures near the bottom of walls. Heating must be provided near floor level or with enough circulation to heat the lower portion of rooms.

2. Furniture or partitions placed up against walls may prevent adequate heating or air flow and produce cool surfaces.
3. Closets, which are rarely conditioned, can also have inadequate ventilation and cool surfaces.
4. Insufficient, damaged, or wet wall insulation can cause cool surfaces.
5. Thermal bridges, or areas of the wall that are not insulated as well as others, can also produce cooler surface temperatures.
6. High humidity caused by swimming pools, ice rinks, or industrial processes can cause condensation on indoor surfaces.
7. Cold air from air-conditioners blowing in the region of warm humid air can cause condensation on indoor surfaces.

The potential for condensation can be determined if wall temperatures and relative humidity of the air are known. The temperature gradient through any portion of a wall is directly proportional to its thermal resistance. Therefore, the temperature gradient Δt_n through a material with a thermal resistance R_n can be calculated using Equation 5.3.5:

$$\Delta t_n = R_n \cdot (t_i - t_o) / R_T \qquad \text{Equation 5.3.5}$$

where:

Δt_n = temperature gradient or drop through material "n"

R_n = thermal resistance of material "n"

t_i = indoor air temperature

t_o = outdoor air temperature

R_T = thermal resistance of wall including air film resistances

The calculation of the temperature gradient profile through a wall assembly due to a temperature difference between indoors and outdoors can be used to determine whether there may be a problem with condensation or differential thermal movement. The temperature gradient alone is not sufficient to accurately locate the dew point within the assembly but it can be used as a guide for determining where condensation may occur from exfiltrating or infiltrating air. The assumption of steady-state conditions in this method is seldom satisfied due to fluctuations in temperatures within the wall. Nevertheless, the calculation is useful to flag potential problems.

Examples are provided for condensation on a cool surface in winter and summer.

Example 5.3.4 – Winter surface condensation due to inadequate heat or air distribution

Assume that, due to poor air circulation, the indoor air conditions are 75°F and 30%RH near the top of the wall and 40°F with an equal amount of moisture in the air near the bottom. This example is the same as the beverage can, Example 5.3.3; condensation will occur if the temperature of the wall is less than 42°F. This can be prevented by providing adequate heating and ventilation along the full height of all walls.

Example 5.3.5 – Winter surface condensation due to not enough insulation

Assume the indoor air conditions are 70°F and 35%RH and the average outdoor temperature for the day is 20°F. Assume the wall is an insulated concrete sandwich panel from the previous thermal resistance calculation, Example 5.3.1. Compare this to a wall with no insulation. First we will determine the temperatures of the wall with insulation.

Thermal Resistance and Temperatures of Insulated Wall.

		R Winter	Temp. Difference, °F	Temp., °F
A.	Surface, outside air film	0.17	1	20
B.	Concrete, 2 in. (145 pcf)	0.13	1	21
C.	EPS insulation (1.25 pcf), 1½ in.	6.00	42	22
D.	Concrete, 2 in. (145 pcf)	0.13	1	64
E.	Surface, inside air film	0.68	5	65
	Total	7.11	50	70
	$U = 1/R$	0.14		

The thermal resistance of the wall, R_T, equals 7.11. The temperature difference across the wall, $t_i - t_o$, equals 70°F – 20°F = 50°F. The temperature difference across any layer is calculated using Equation 5.3.5. The temperature difference across the air film equals 0.17(50) / 7.11 or 1°F. The remaining temperature differences are calculated in the same manner as shown on the previous page. The temperature differences

Thermal Resistance and Temperatures of Uninsulated Wall.

		R Winter	Temp. Difference, °F	Temp., °F
A.	Surface, outside air film	0.17	8	20
B.	Concrete, 4 in. (145 pcf)	0.25	11	28
C.	Surface, inside air film	0.68	31	39
	Total	1.10	50	70
	$U = 1/R$	0.91		

are subtracted from the indoor air temperature (or added to the outdoor temperature) to determine temperatures at boundaries between materials and are shown above in the right column. The inside surface of the wall, between the concrete and the inside air film, is 65°F.

Shown above is the determination of the thermal resistance and temperatures of an uninsulated wall.

Note that the air temperature of the room is 70°F and the temperature of the insulated wall surface inside the room is 65°F while that of the uninsulated wall surface is 39°F. The surface film resistance plays a much larger role in an uninsulated wall. The temperature gradient across the inside air film is 5°F for the insulated wall and 31°F for the uninsulated wall. The dew point of air at 70°F and 35%RH is 42°F. Since the inside surface of the uninsulated wall is 39°F, condensation will form on the inside surface.

Also note that the average outdoor air temperature for the day was used in calculations. This average rather than the lowest daily temperature was used for two reasons. First, thermal mass of the concrete will tend to moderate the indoor surface temperature so that using an extreme temperature expected for just a few hours may be too conservative. Secondly, if a condensation occurrence is predicted for only a few hours, it will often occur and evaporate without causing problems.

Thermal bridges, such as a full thickness of concrete along panel edges, will behave similar to the uninsulated wall in Example 5.3.5. Thermal bridges may also occur at;

- Junctions of floors and walls, walls and ceilings, walls and roofs
- Around wall or roof openings
- At perimeters of slabs on grade
- At connections, if insulation is penetrated
- Any place metal, concrete, or a highly conductive material penetrates an insulation layer, such as metal shear connectors

Condensation can develop at these locations especially if they are in corners or portions of a building that receive poor ventilation.

Example 5.3.6 – Summer surface condensation

Condensation on wall surfaces also occurs in summer conditions. Cold air from air-conditioners blowing in the region of warm humid air can cause condensation on indoor surfaces. This most frequently happens when wall air-conditioner units are placed near win-

dow or door frames that allow humid air to enter the conditioned space.

Assume the average daily outdoor conditions are 80ºF and 75%RH. Assume this air can enter a room in a gap between the top of an air-conditioning unit and the bottom of a window. Assume the air conditioning unit blows enough cool air in the vicinity of a wall so that the wall surface temperature is 65ºF. Since the dew point of the moist air is 71ºF, condensate will form on the cool wall surface. This illustrates the need to provide adequate joint sealing to prevent the entry of humid air.

Prevention of Condensation on Wall Surfaces. All air in buildings contains water vapor. If the inside surface temperature of a wall is too cold, the air contacting this surface will be cooled below its dew-point temperature and water will condense on that surface. Condensation on interior room surfaces can be controlled both by suitable construction and by precautions such as: (1) reducing the interior RH or dew point temperature by dehumidification equipment or ventilation; or (2) raising the temperatures of interior surfaces that are below the dew point, generally by use of insulation.

The interior air-dew point temperature can be lowered by removing moisture from the air, either through ventilation or dehumidification. Adequate surface temperatures can be maintained during the winter by incorporating sufficient thermal insulation, using double glazing, circulating warm air over the surfaces, or directly heating the surfaces, and by paying proper attention during design to the prevention of thermal bridging.

5.3.6.4 Condensation within walls and use of vapor retarders

Although condensation due to air movement is usually much greater than that due to vapor diffusion for most buildings, the contribution from water vapor diffusion can still be significant. In a well-designed building, the effects of air movement and water vapor diffusion in walls and roofs are considered.

Vapor retarders. Air barriers (also called air retarders) and vapor retarders (also called vapor barriers) are often confused. An air barrier is used to reduce the amount of infiltration (or leakage) or exfiltration of air into a conditioned space. A vapor retarder is used to prevent, or more correctly greatly reduce, water vapor (moisture) from moving through building materials. A vapor retarder can be used as an air barrier. An air barrier on the outside of a building in a cold climate generally needs to let moisture escape, so should not function as a vapor retarder. If the air barrier will also be serving as a vapor retarder, or if it has a low permeance to vapor diffusion, then its position within the building envelope must be carefully considered in relation to the other envelope components.

The principal function of a vapor retarder is to impede the passage of moisture as it diffuses through the assembly of materials in a building envelope, to control the location of the dew point in the assembly and to ensure there is a manageable flow of moisture across the assembly. The basic principles, simply stated are:

- Moisture migrates through building materials due to a difference in temperature or RH or both between the inside and outside.
- Sometimes this moisture migration will cause condensation. The correct type and placement of insulation and a vapor retarder will prevent condensation on cold portions within a wall.
- The vapor retarder or vapor retarding materials are generally placed on the side of the wall that is warm most of the year.
- If a vapor retarder with low permeance is selected, the materials on the opposite side should have higher permeance so the wall is able to dry to that side, if necessary.

These principles are covered in depth in the sections that follow.

Most codes and references consider a material or membrane with a permeance of 1 perm or less a vapor retarder; less than 0.1 perms is considered vapor impermeable and between 0.1 and 1 perm is considered semi-impermeable. Materials or membranes with a permeance greater than 10 are considered permeable. In the range of 1 to 10 perms, materials are considered semi-permeable.

Concrete as a vapor retarder. Normalweight, quality concrete can be considered a semi-impermeable vapor retarder in thicknesses of 3 in. or more. Published values of concrete permeability are approximately 3 perm·in., so that 3 in. of concrete has a permeance of approximately 1 perm, provided it remains relatively crack-free. Permeance is a function of the water-ce-

Table 5.3.13 Typical Permeance (M) and Permeability (μ) Values[1].

Material	M Perms	μ Perm-in.
Concrete (1:2:4 mixture)[2]	—	3.2
Wood (sugar pine)	—	0.4 – 5.4
Extruded polystyrene (XPS)		1.2
Expanded polystyrene, bead (EPS)	—	2.0 – 5.8
Polyisocyanurate	—	4.0 – 6.6
Polyicynene		50
Glass fiber batt		120
Kraft paper	1	
Plaster on gypsum lath (with studs)	20	
Gypsum wallboard, 0.375 in.	50	
Polyethylene, 2 mil	0.16	
Polyethylene, 4 mil	0.08	
Polyethylene, 6 mil	0.06	
Aluminum foil, 0.35 mil	0.05	
Aluminum foil, 1 mil	0.00	
Built-up roofing (hot mopped)	0.00	
Duplex sheet, asphalt laminated, aluminum foil one side	0.0023	
Paint		
1 coat primer plus 2 coats latex on gypsum wallboard	3 to 20	
1 coat primer plus 2 coats acrylic on gypsum wallboard	7	
1 coat primer plus 2 coats synthetic on gypsum wallboard	3	
1 coat primer plus 2 coats oil on gypsum wallboard	5	
2 coats asphalt paint on plywood	0.4 [3]	
2 coats enamel on smooth plaster	0.5 – 1.5	
Various primers plus 1 coat flat oil paint on plaster	1.6 – 3.0	
Breather type membrane	3 – 25	

1 *ASHRAE Handbook of Fundamentals and other sources*. Values vary depending on the moisture content of the material.

2 Permeances for concrete vary on the concrete's water-cement ratio and other factors.

3 Dry-cup (ASTM E 96).

ment ratio of the concrete. A low water-cement ratio, such as that used in most precast concrete members, results in concrete with low permeance.

Where climatic conditions demand, insulation, sufficient concrete, or the addition of a vapor retarder is generally necessary in order to prevent condensation. Thicknesses of 1 in. or more of rigid extruded polystyrene board (XPS) or 2 to 3 in. of expanded polystyrene (EPS), if properly applied, will serve as its own vapor retarder. In such cases, for cold climates, the insulation can be installed on a complete bed of adhesive applied to the interior of the inner wythe of the wall with joints fully sealed with adhesive, to provide a complete barrier to both air and vapor movement.

Codes. The International Energy Conservation Code (IECC)[14] requires a vapor retarder with of 1 perm or less on the inside of insulation in cold climates. However it allows for an exception where moisture or its freezing will not damage the materials, or where other means are provided to prevent condensation. This requirement is workable for concrete since 3 in. of concrete has a perm of approximately 1 perm. The important concepts are whether condensation will occur and, if it does, will it damage the materials.

At present, the Massachusetts energy code is more restrictive that the IECC.[15] This code requires a vapor retarder of 0.1 perms on the indoor side of the insulation. Concrete wall systems can generally meet the code under the exceptions that require calculations because the condensing surface is the warm side of the insulation, and the temperature at that surface is kept above the dew point of the indoor air. This code also requires that the materials and finishes on the outdoor side of the insulation have permeances at least 10 times greater than that on the inside. This requirement is needed to allow the wall to dry to the outdoor side since the low permeance will not allow it to dry to the indoor side. Codes that have blanket requirements such as these for all wall systems may cause more moisture problems since low permeance materials sometimes prevent walls from drying.

Other materials. Building materials have water vapor permeances from very low to very high, see Table 5.3.13. Actual values for a given material vary depending on the moisture content of the material. Two

14 International Energy Conservation Code (IECC), International Code Council, Inc., Country Club Hills, IL, www.ICCsafe.org

15 Massachusetts Energy Code. www.mass.gov/bbrs/780 CMR Chapter 13.pdf.

commonly used test methods are the water method (wet cup) and desiccant method (dry cup) methods in ASTM E96, "Standard Test Methods for Water Vapor Transmission of Materials." Specimens are sealed over the tops of cups containing either water or desiccant, placed in a controlled atmosphere usually at 50% relative humidity, and weight changes measured. The change in weight represents the rate of moisture passing through the specimen.

When properly used, low permeance materials keep moisture from entering a wall assembly. Materials with higher permeance allow construction moisture and moisture which enters inadvertently, or by design, to escape.

When a material such as plaster or gypsum board has a permeance which is too high for the intended use, a vapor retarder can be used directly behind such products. Polyethylene sheet, aluminum foil and building paper with various coatings are commonly used. Proprietary vapor retarders, usually combinations of foil and polyethylene or asphalt, are frequently used in freezer and cold storage construction. When vapor retarders are added sheets or coatings, they should be clearly identified by the designer and be clearly identifiable by the general contractor.

Water vapor diffusion occurs when water vapor molecules diffuse through solid interior materials. The passage of water vapor through material is in itself generally not harmful. It becomes of consequence when, at some point along the vapor flow path, a temperature level is encountered that is below the dew-point temperature and condensate accumulates. The rate of vapor movement is dependent on the permeability of the materials, the vapor pressure, and temperature

Table 5.3.14 Water Vapor Pressures at Saturation (SVP) for Various Temperatures.

Temp., °F	SVP, in. Hg	Temp., °F	SVP, in. Hg	Temp., °F	SVP, in. Hg	Temp., °F	SVP, In. Hg
-30	0.007	17	0.089	38	0.229	59	0.504
-20	0.013	18	0.093	39	0.238	60	0.522
-10	0.022	19	0.098	40	0.248	61	0.541
-5	0.029	20	0.103	41	0.258	62	0.560
0	0.038	21	0.108	42	0.268	63	0.580
1	0.040	22	0.113	43	0.278	64	0.601
2	0.042	23	0.118	44	0.289	65	0.622
3	0.044	24	0.124	45	0.300	66	0.644
4	0.046	25	0.130	46	0.312	67	0.667
5	0.049	26	0.136	47	0.324	68	0.691
6	0.051	27	0.143	48	0.336	69	0.715
7	0.054	28	0.150	49	0.349	70	0.739
8	0.057	29	0.157	50	0.363	71	0.765
9	0.060	30	0.164	51	0.376	72	0.791
10	0.063	31	0.172	52	0.391	73	0.819
11	0.066	32	0.180	53	0.405	74	0.847
12	0.069	33	0.188	54	0.420	75	0.875
13	0.073	34	0.195	55	0.436	76	0.905
14	0.077	35	0.203	56	0.452	77	0.935
15	0.081	36	0.212	57	0.469	78	0.967
16	0.085	37	0.220	58	0.486	79	0.999
						80	1.032

Note: 1 in. Hg = 0.491 psi. Actual vapor pressure = SVP x (%RH).

differentials. Generally, the greater the temperature difference between inside and outside and the more permeable the materials, the more vapor will travel through the wall. Vapor pressures increase with temperature even if the relative humidities stay the same. So, generally, the colder the outside temperature, the greater the pressure of the water vapor in the warm inside air compared to the cooler outside air. Water vapor pressures at saturation (100%RH) are provided in Table 5.3.14. Leakage of moist air through small cracks may be a greater problem than vapor diffusion.

Application. The location of the vapor retarder is dependent on the wall construction and climate. A solid precast concrete wall with appropriate joint sealant will act as a semi-impermeable vapor retarder in many climates. If a separate air barrier membrane is used, it should be clearly identified in the construction documents, preferably on the drawings. While a vapor retarder does not need to be perfectly continuous, care should be taken to minimize the occurrence of small discontinuities or imperfections such as unsealed laps, cuts, and pin holes. The vapor retarder in a wall system should be continuous from the floor to the underside of the ceiling slab to prevent moisture from bypassing the vapor retarder. Wall penetration such as outlets and window frames, should also be sealed.

Low-permeance paints, vinyl wall paper, or other similar materials that act as vapor retarders should not be placed on the interior surface of concrete walls. Since concrete acts also as a vapor retarder, an additional vapor retarder prevents moisture within the wall from evaporating.

Three common precast concrete systems and their applicability for use in various climate zones (see Fig. 5.3.19) are presented in Fig. 5.3.20. These walls allow concrete to dry without accumulating moisture within the wall. The traditional practice for frame walls of placing a vapor retarder behind gypsum wallboard in cold climates is *not* recommended for these walls. The recommendations were developed using typical indoor relative humidities during winter for all building types. Indoor relative humidities greater than these during December, January, and February have the potential to cause condensation within these or any wall/HVAC system not properly designed.

The three walls in Fig. 5.3.20 are insulated to meet the requirements of the 2004 International Energy Conservation Code (IECC).[16] The total wall including the concrete, insulation, and interior finishes are considered in the design of a wall with low potential for moisture problems. Providing insulation as required by codes such as ASHRAE 90.1 or the IECC generally provides cost effective levels of insulation for precast concrete walls. Insulation requirements are dependent on climate. The map in Fig. 5.3.19 is used to determine the climate zone number and letter required for determining compliance with the IECC. The amount of insulation required for the three walls is shown in Fig. 5.3.20. For international locations, Appendix B of ASHRAE 90.1-2004 provides tables with climate zone numbers and letters. This appendix also provides the climate zones in tabular form by U.S. county.

A precast concrete sandwich panel wall with concrete on both sides of rigid insulation, Fig. 5.3.20(a), is recommended for Climate Zones 1 through 7 (all except subarctic climates). Expanded polystyrene (EPS) or extruded expanded polystyrene insulation (XPS) may be used. The insulation board shown in the wall details is placed within the concrete during the precasting process prior to building construction. The overall thermal resistance of a sandwich panel is greater (more energy saving) if the ties connecting the concrete wythes are plastic, composite fiberglass or epoxy coated carbon grid rather than metal.

A precast concrete wall with continuous rigid insulation, Fig. 5.3.20(b), is recommended for Climate Zones 1 through 7 (all except subarctic climates). XPS insulation may be used in Climate Zones 1 through 7 and EPS insulation may be used in Climate Zones 1 through 5. The lower permeance of the XPS is recommended for the colder climates, Zones 6 and 7. The insulation board should be applied continuously and in direct contact with the precast concrete. This can be done using adhesive, stick pins, or mechanical fasteners.

Continuous insulation uninterrupted by metal framing is beneficial because metal framing reduces the effectiveness of fiberglass batt insulation and other insulation by more than half. For example, R13 insulation has an effective R-value of 6 when placed between steel frame members spaced 16 in. on center. The continuous insulation also reduces the potential for cold spots on the interior and exterior surfaces caused by metal framing. These can sometimes lead to condensation

16 International Energy Conservation Code (IECC), International Code Council, Inc., Country Club Hills, IL, www.ICCsafe.org

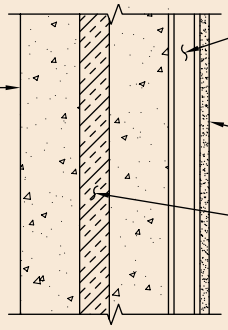

IECC Zone	Min. R-Value of Added Insulation
1, 2	None
3B	None
3A (Below "Warm Humid Line")	None
3A (Above "Warm Humid Line")	R7.5
3C, 4A, 4B	R7.5
4C, 5, 6	R10
7	R12.5

"A" Precast Sandwich Panel Wall
Not to scale

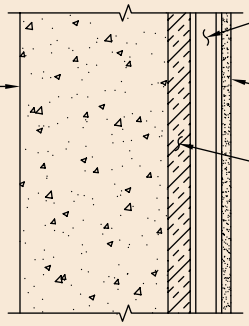

IECC Zone	Min. R-Value of Added Insulation
1, 2	None
3B	None
3A (Below "Warm Humid Line")	None
3A (Above "Warm Humid Line")	R7.5
3C, 4A, 4B	R7.5
4C, 5, 6	R10
7	R12.5

*Expanded polystyrene insulation acceptable in climate zones 1-5

"B" Precast Concrete with Rigid Insulation
Not to scale

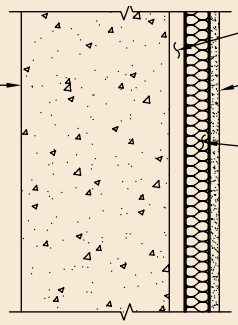

IECC Zone	Min. R-Value of Added Insulation
1*, 2*	None
3B*	None
3A* (Below "Warm Humid Line")	None
3A (Above "Warm Humid Line")	R13
3C*, 4, 5	R13

*If insulation is used, kraft paper not recommended.
Only applicable for IECC zones 1-5

"C" Precast Concrete with Batt Insulation
Not to scale

Fig. 5.3.20 Typical wall details.

and shadowing or other unsightly moisture problems on the inside and outside surfaces of buildings. The potential for shadowing in a sandwich panel wall is less if the ties connecting the concrete wythes are plastic, fiberglass composite, or epoxy coated carbon grid rather than metal.

Wood and steel frame walls have cavities where moisture can accumulate, causing wood to rot and metal to corrode. The sandwich panel wall and concrete wall with rigid insulation have no wall cavities within the structural portion of the wall, thus reducing the possibility of unnoticed moisture accumulation and related damage. The only cavity is the air space between the insulation and gypsum wallboard, if wallboard is desired. This cavity is designed to keep the wallboard dry. XPS insulation is particularly moisture resistant and has low water absorption compared to other insulation materials while EPS has lower moisture absorption compared to non-foam insulation materials.

A precast concrete wall with batt insulation (and kraft paper where appropriate), Fig. 5.3.20(c), is recommended for Climate Zones 1 through 5. To prevent potential moisture accumulation within the wall and related problems, this type of wall construction is not recommended for the colder climates, Zones 6, 7, and 8. The fiberglass insulation is installed between metal framing. A 1-in. minimum air space is required between the batts and the concrete to prevent the potential for moisture to accumulate in the batt insulation. The air space between the metal framing and the precast concrete reduces the potential for cold spots on the interior and exterior surfaces caused by the framing. These can sometimes lead to condensation and shadowing or other unsightly moisture problems on the inside and outside surfaces of buildings. In Climate Zones 3A (above the warm humid line), 4, and 5, kraft-faced batts are required to prevent condensation within the walls during the winter.

The three walls in Fig. 5.3.20, with appropriate joint sealant, will act as semi-impermeable vapor retarders and allow concrete to dry without moisture accumulating within the walls. These constructions allow the outside layer of concrete to dry to the outside and the rest of the wall to dry to the inside. Latex paint with a permeance of 5 to 10 perms on the drywall is generally adequate. The sandwich panel wall and wall with rigid insulation are assumed to have $1^1/_2$ to 2 in. of insulation in Zone 4, 2 in. in Zone 5, 2 to $2^1/_2$ in. in Zone 6, and $2^1/_2$ to 3 in. in Zone 7. The wall with batt insulation is assumed to have R13 fiberglass batts.

The location of the cold surfaces within a wall depends on the climate. Moisture generally moves into wall systems from indoors when it is cold outside, and into wall systems from outdoors when it is warm outside. Actual water vapor and moisture-laden air movement depends on the temperature and relative humidity indoors and outdoors, the moisture content of the materials, and their absorption properties.

Cold Climates (Zones 5, 6, and 7). In these climates the vapor retarding surface should be applied on or near the warm side (inner surface) of assemblies. For the concrete sandwich panel wall, the insulation, inside concrete wythe and painted gypsum wallboard, if used, act as the semi-impermeable vapor retarder during the winter. For the precast concrete wall with rigid insulation, the insulation and painted gypsum wallboard on the inside act as a semi-permeable vapor retarder during the winter. For the precast concrete wall with batt insulation, the kraft paper and painted gypsum wallboard act as a semi-permeable vapor retarder during the winter. For all three walls, the exterior concrete wythe acts as a semi-impermeable vapor retarder during the summer. Providing an additional low permeance vapor retarder on the inside of the wall would create a "double vapor retarder" and prevent moisture that accumulates within the wall from leakage or condensation from drying to the inside. For this reason, a low permeance vapor retarder on the inside of this wall system is not recommended.

For the sandwich panel wall and the precast concrete wall with rigid insulation, the relative humidity of the indoor space in the coldest winter months is assumed to be not more than 25% in Zone 5, 20% in Zone 6, and 10% in Zone 7. For the precast concrete wall with batt insulation, the relative humidity of the indoor space in the coldest winter months is assumed to be not more than 25% in Zone 5. The recommendations were developed using these typical indoor relative humidities during winter. Indoor relative humidities greater than these during December, January, and February have the potential to cause condensation within these or any wall system not properly designed. Calculations may be required when exterior sheathing is used on the cold outdoor side since it may act as a vapor retarder on the cold side of the wall.

Fittings installed in outer walls, such as electrical

boxes without holes and conduits, should be completely sealed against moisture and air passage, and they should be installed on the warm side insulation. Also, high thermal conductance paths such as at connections inward from or near the colder surfaces may cause condensation within the construction.

Warm Humid Climates (1A, 2A, 3A south of the humid line). In these climates, the exterior surface should have a lower vapor permeance than the interior surface. For all three walls, the exterior concrete acts as a semi-impermeable vapor retarder during the warm humid months. For the concrete sandwich panel wall, the inside concrete wythe and painted gypsum wallboard, if used, act as the semi-permeable vapor retarder during the cool months. For the precast concrete wall with rigid insulation, the insulation and painted gypsum wallboard on the inside act as a semi-permeable vapor retarder during the cool months. For the precast concrete wall with batt insulation, the painted gypsum wallboard acts as a semi-permeable vapor retarder during the cool months. Low permeance paints, vinyl wallpaper, or other materials that act as vapor retarders should not be placed on the interior surface of the wall. Moisture from outdoors often accumulates behind these materials when used in these climates. Kraft paper is not recommended on the insulation in these climates because it also prevents the wall from drying.

In warm humid climates during rainy periods, exterior walls can absorb large quantities of moisture that are later driven inward by warm temperatures and solar effects. The concrete and rigid insulation (where provided) each have a moderately low permeance that helps prevent this moisture from moving inward. Some exterior paints and finishes can also provide an adequate level of resistance to moisture intrusion. The concrete and rigid insulation should be continuous and sealed to prevent the moisture from moving inward.

The operation of the cooling system is more important in warm and humid climates than any other climate. Since the latent load (that required to remove moisture) is often greater than the sensible load (that required to bring down the temperature), the system needs to be designed to remove the latent load without cycling off because it has reached the desired temperature set point. Oversized air-conditioners may cycle off before the latent load is removed. Setting the chilled water supply temperature too high will have the same effect of not being able to remove the latent load. Also, many people erroneously think that setting the thermostat lower will remove moisture problems. Low thermostat settings on hot humid days has the opposite effect; they make surfaces colder and more prone to condensation.

Warm Dry, Mixed, and Marine Climates (1B, 2B, 3A north of the humid line, 3B, 3C, 4). The need for vapor retarders and low permeance materials is less in these climates than in cold or warm humid climates. Condensation can occur by the mechanisms discussed for cold climates, but the duration of these conditions is usually short enough that the materials subsequently dry without problems if surfaces are semi-permeable or semi-impermeable. The strategy for these climates is to allow the wall system to dry either to the outside or inside, or preferably, to both sides, since more damage is caused by improperly placed vapor retarders than by omitting one. The three precast concrete walls allow this drying to either side. The exterior concrete wythe acts as a semi-impermeable vapor retarder during the warm months. For the concrete sandwich panel wall, the inside concrete wythe and painted gypsum wallboard, if used, act as the semi-permeable vapor retarder during the cool months. For the precast concrete wall with rigid insulation, the insulation and painted gypsum wallboard on the inside act as a semi-permeable vapor retarder during the cool months. For the precast concrete wall with batt insulation, the painted gypsum wallboard acts as a semi-permeable vapor retarder during the cool months.

For the sandwich panel wall and the precast concrete wall with XPS insulation, the relative humidity of the indoor space in the coldest winter months is assumed to be not more than 40% in Zone 4. For the precast concrete wall with EPS insulation, the relative humidity of the indoor space in the coldest winter months is assumed to be not more than 30% in Zones 4A and 4B and 35% in Zone 4C. For the precast concrete wall with batt insulation, the relative humidity of the indoor space in the coldest winter months is assumed to be not more than 30% in Zone 4A and 35% in Zones 4B and 4C. The recommendations were developed using these typical indoor relative humidities during winter. Indoor relative humidities greater than these during December, January, and February have the potential to cause condensation within these or any wall system not properly designed.

These recommendations are for general use under normal building operating conditions.

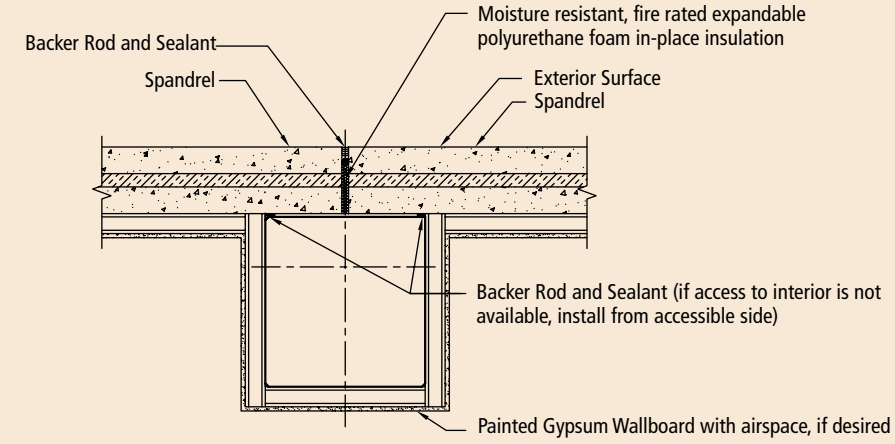

"A" Precast Sandwich Panel Wall
Not to scale

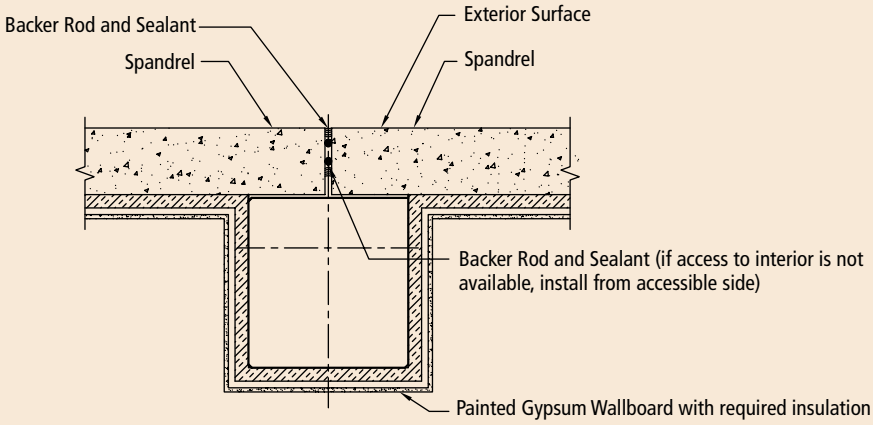

"B" Precast Concrete with Rigid Insullation
Not to scale

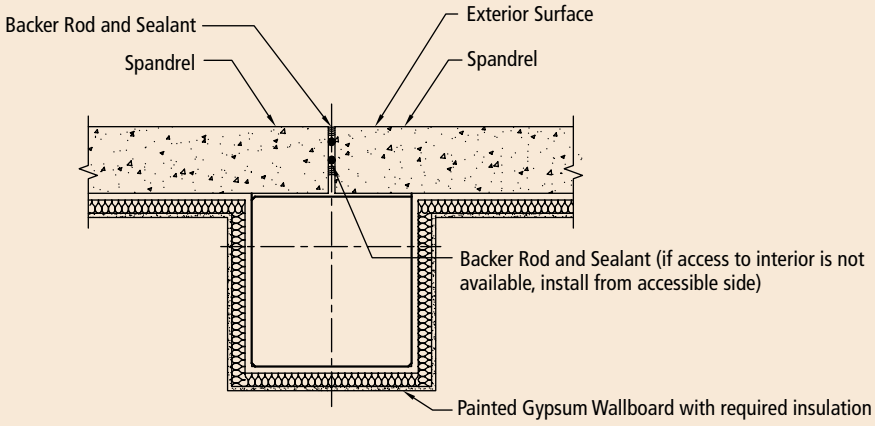

"C" Precast Concrete with Batt Insullation
Not to scale

Fig. 5.3.21
Typical spandrel/column detail – Option A.

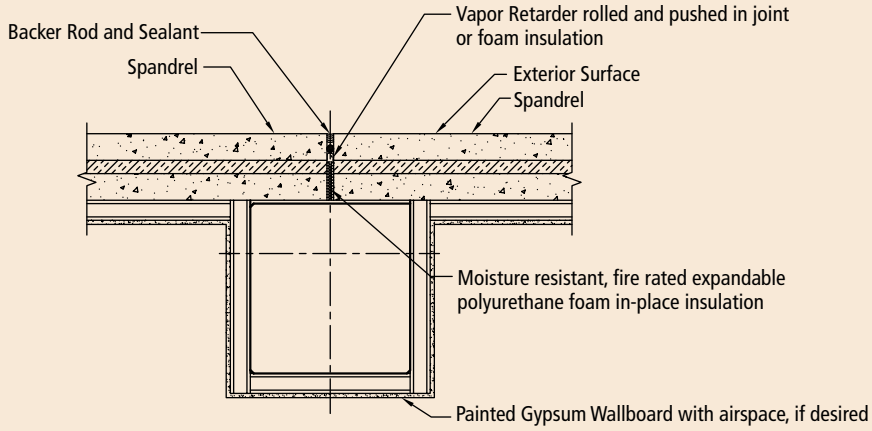

"A" Precast Sandwich Panel Wall
Not to scale

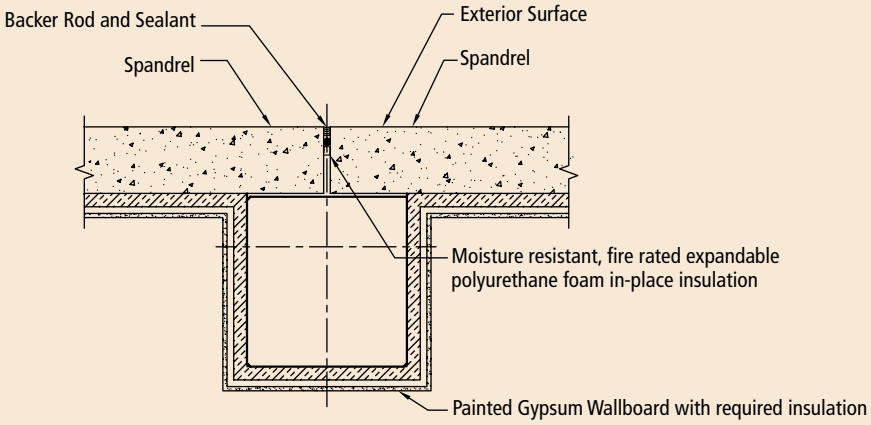

"B" Precast Concrete with Rigid Insulation
Not to scale

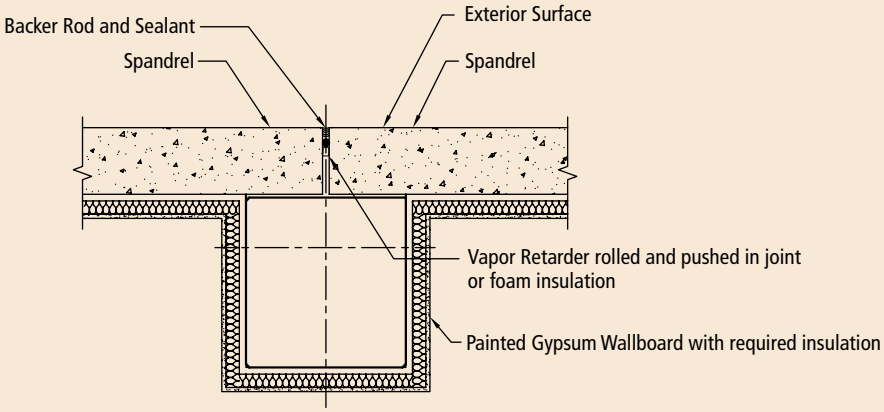

"C" Precast Concrete with Batt Insulation
Not to scale

Fig. 5.3.22
Typical spandrel/column detail – Option B.

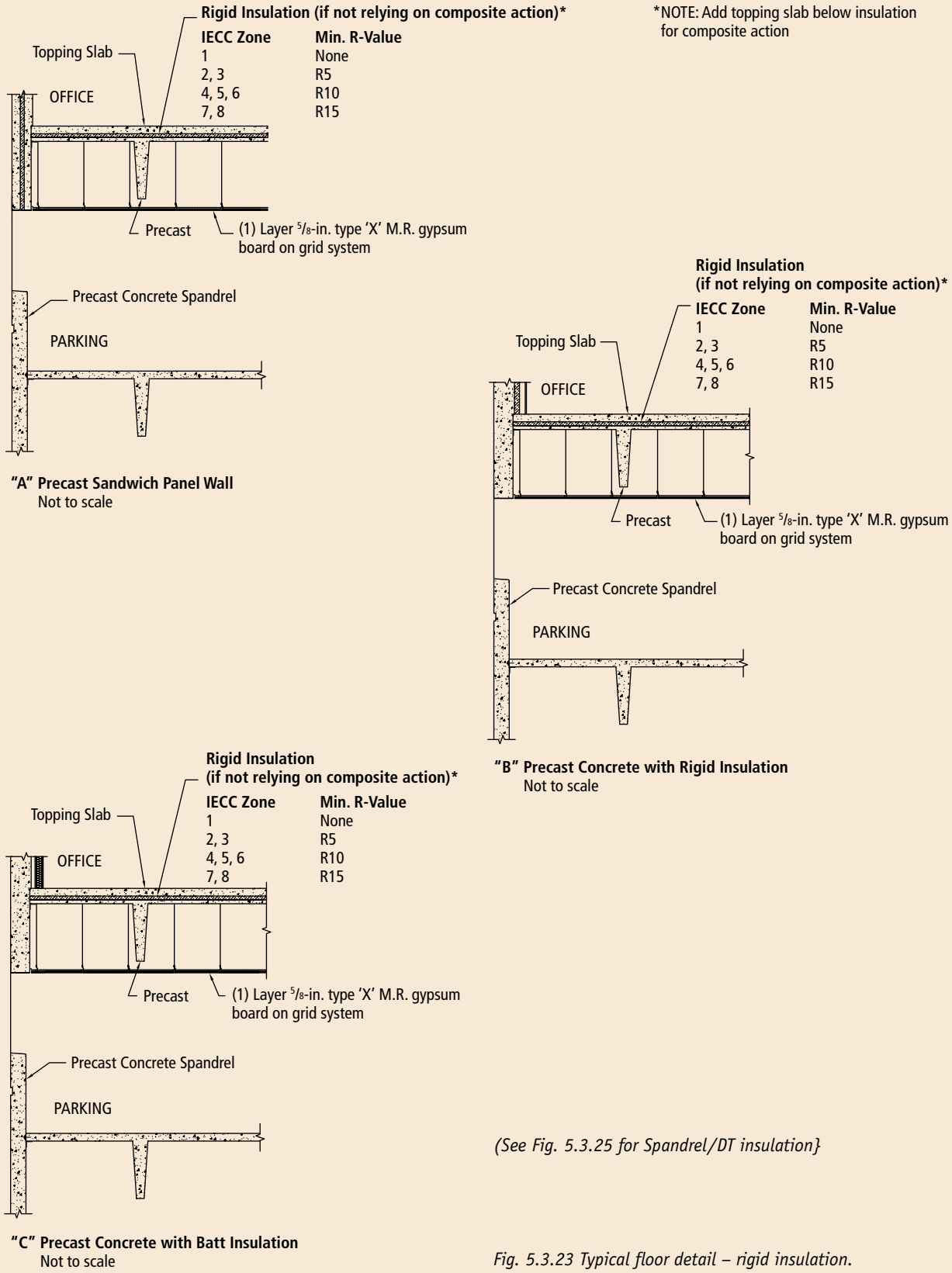

(See Fig. 5.3.25 for Spandrel/DT insulation}

Fig. 5.3.23 Typical floor detail – rigid insulation.

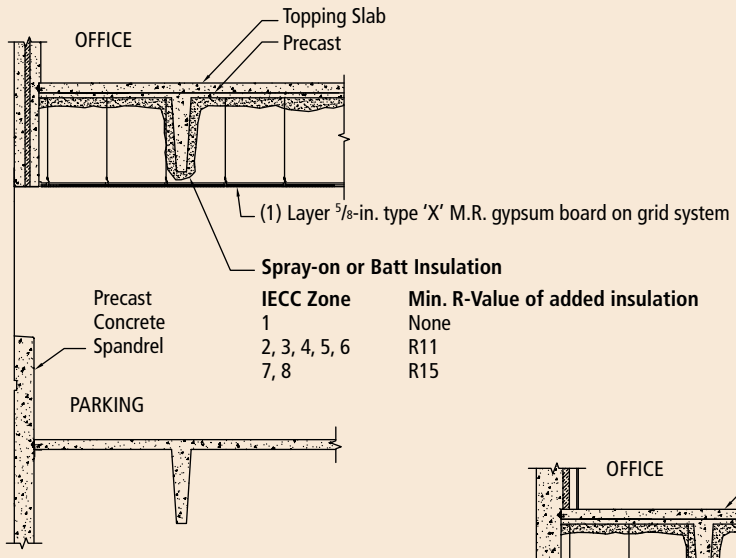

IECC Zone	Min. R-Value of added insulation
1	None
2, 3, 4, 5, 6	R11
7, 8	R15

"A" Precast Sandwich Panel Wall
Not to scale

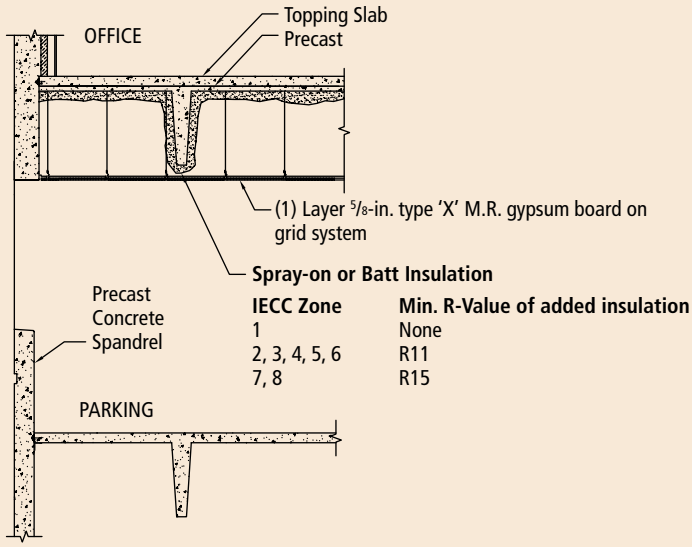

IECC Zone	Min. R-Value of added insulation
1	None
2, 3, 4, 5, 6	R11
7, 8	R15

"B" Precast Concrete with Rigid Insulation
Not to scale

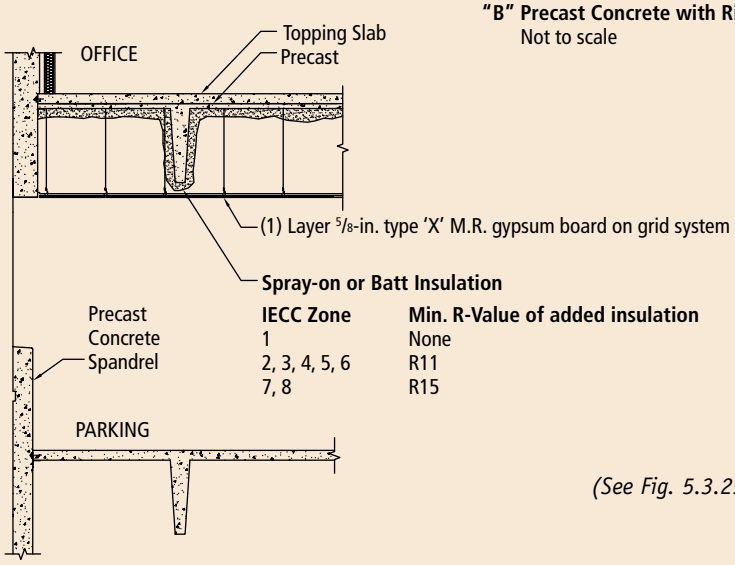

IECC Zone	Min. R-Value of added insulation
1	None
2, 3, 4, 5, 6	R11
7, 8	R15

(See Fig. 5.3.25 for Spandrel/DT insulation}

"C" Precast Concrete with Batt Insulation
Not to scale

Fig. 5.3.24 Typical floor detail – alternate batt insulation.

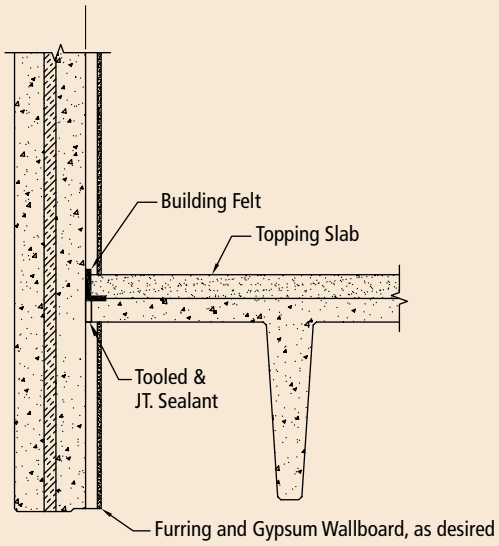

"A" Precast Sandwich Panel Wall
Not to scale

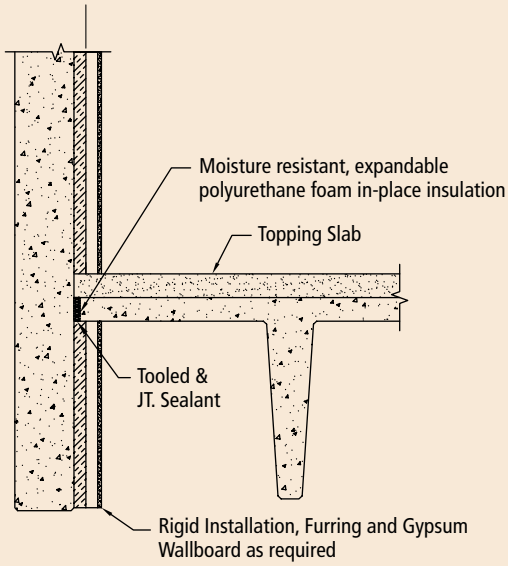

"B" Precast Concrete with Rigid Insulation
Not to scale

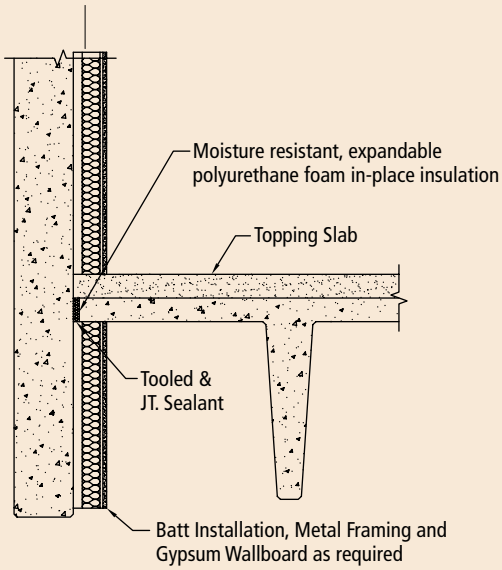

"C" Precast Concrete with Batt Insulation
Not to scale

Fig. 5.3.25 Typical non-loadbearing spandrel/DT detail.

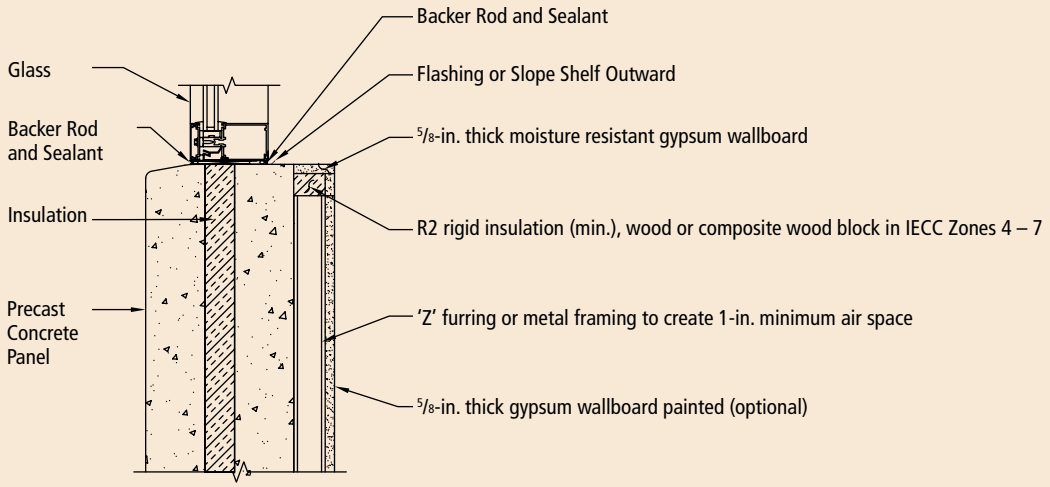

"A" Precast Sandwich Panel Wall
Not to scale

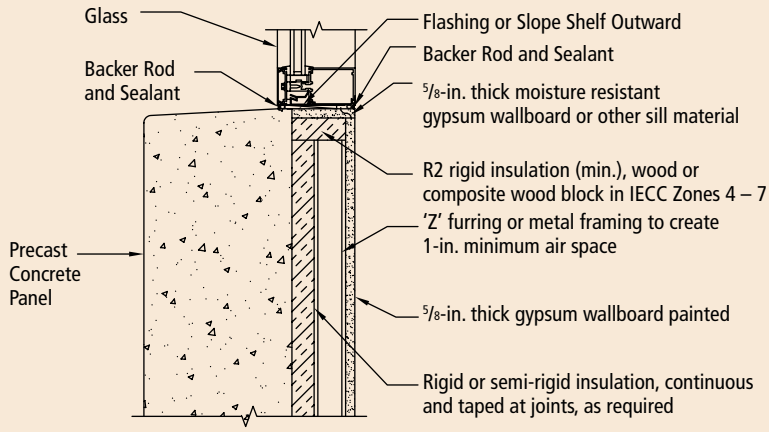

"B" Precast Concrete with Rigid Insulation
Not to scale

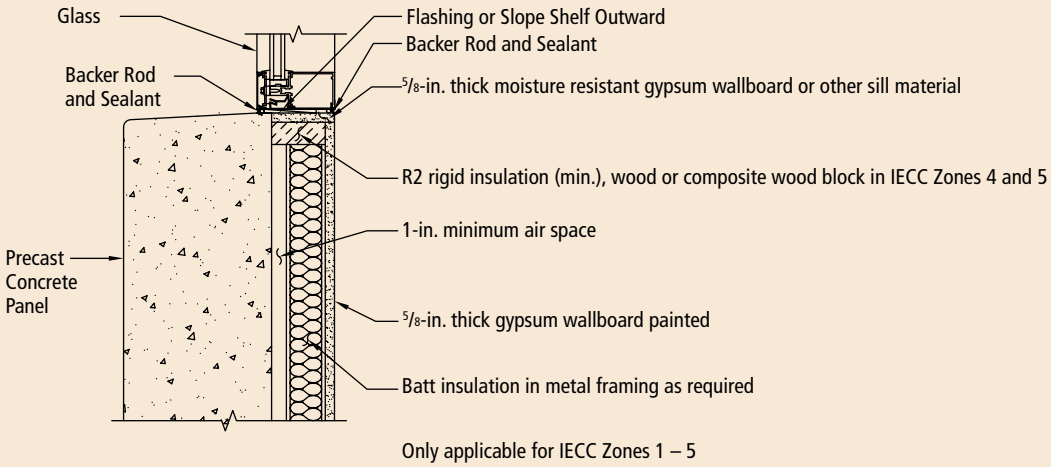

"C" Precast Concrete with Batt Insulation
Not to scale

Fig. 5.3.26 Typical window sill detail.

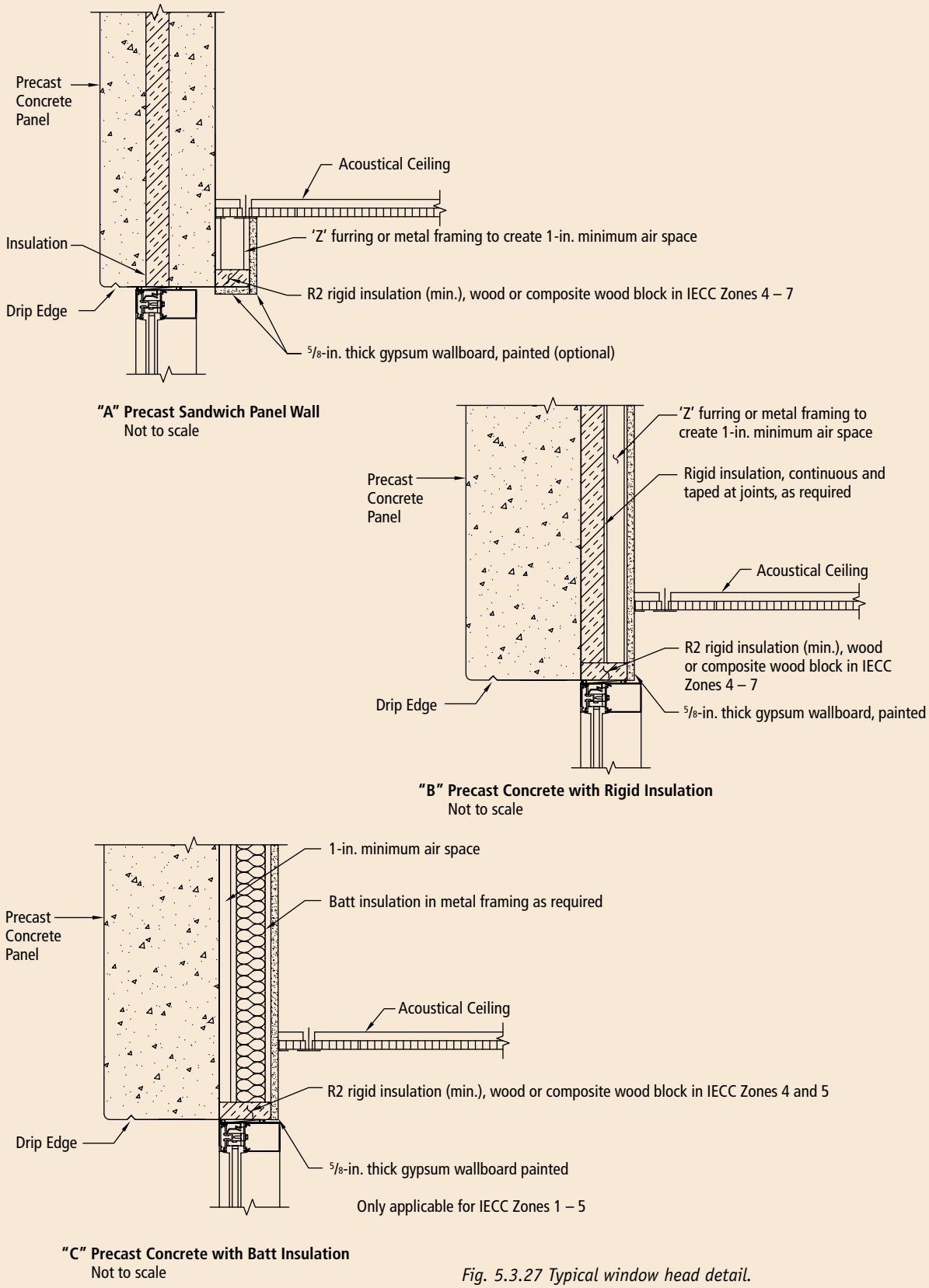

Fig. 5.3.27 Typical window head detail.

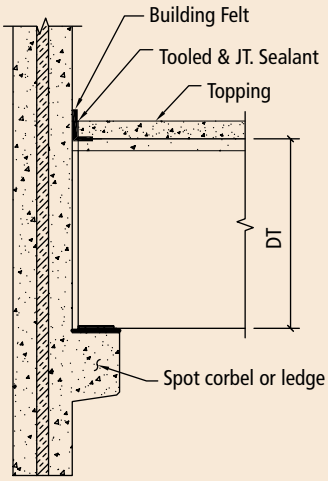

"A" Precast Sandwich Panel Wall
Not to scale

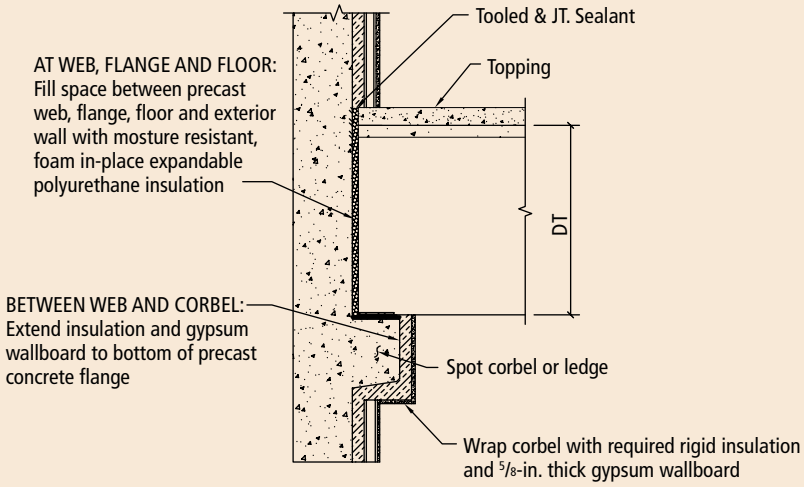

"B" Precast Concrete with Rigid Insulation
Not to scale

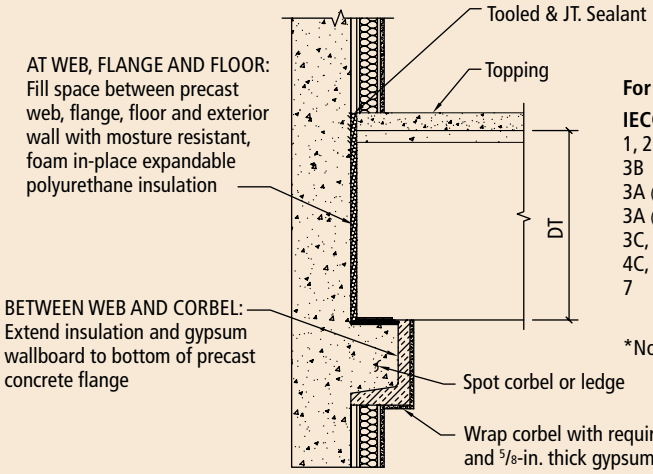

"C" Precast Concrete with Batt Insulation
Not to scale

For Sections B & C – corbel insulation

IECC Zone	Min. R-Value of Added Insulation
1, 2	None
3B	None
3A (Below "Warm Humid Line")	None
3A (Above "Warm Humid Line")	R7.5
3C, 4A, 4B	R7.5
4C, 5, 6*	R10
7	R12.5

*Not Applicable for Section C

Fig. 5.3.28
Typical loadbearing spandel with corbel/DT detail.

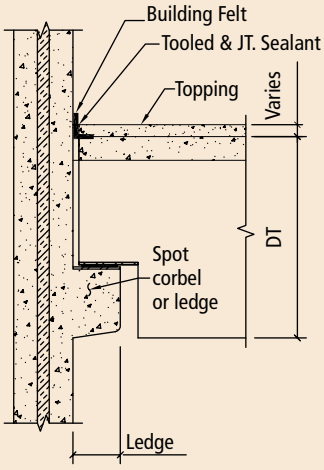

"A" Precast Sandwich Panel Wall
Not to scale

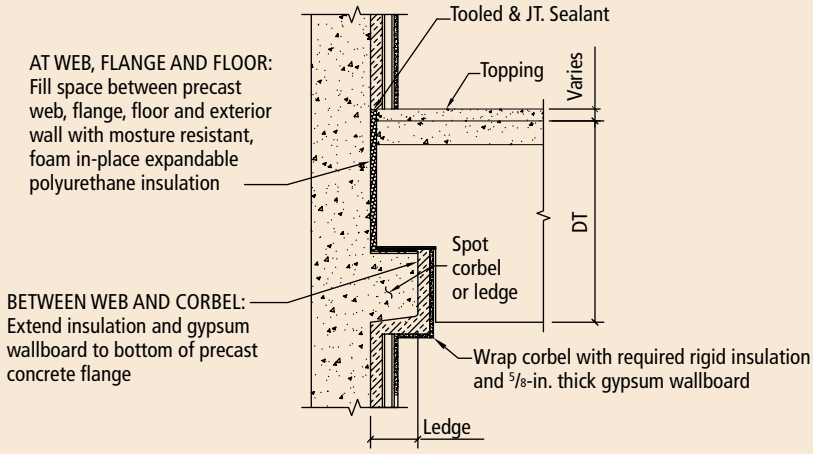

"B" Precast Concrete with Rigid Insulation
Not to scale

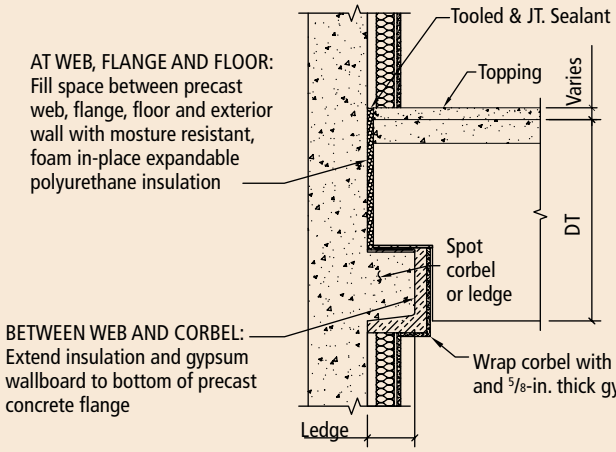

For Sections B & C – corbel insulation

IECC Zone	Min. R-Value of Added Insulation
1, 2	None
3B	None
3A (Below "Warm Humid Line")	None
3A (Above "Warm Humid Line")	R7.5
3C, 4A, 4B	R7.5
4C, 5	R10

"C" Precast Concrete with Batt Insulation
Not to scale

Fig. 5.3.29
Typical loadbearing spandrel with corbel/dapped DT detail.

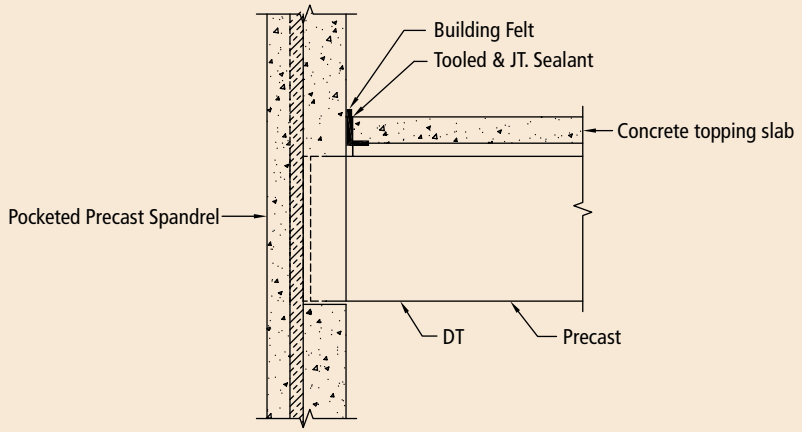

"A" Precast Sandwich Panel Wall
Not to scale

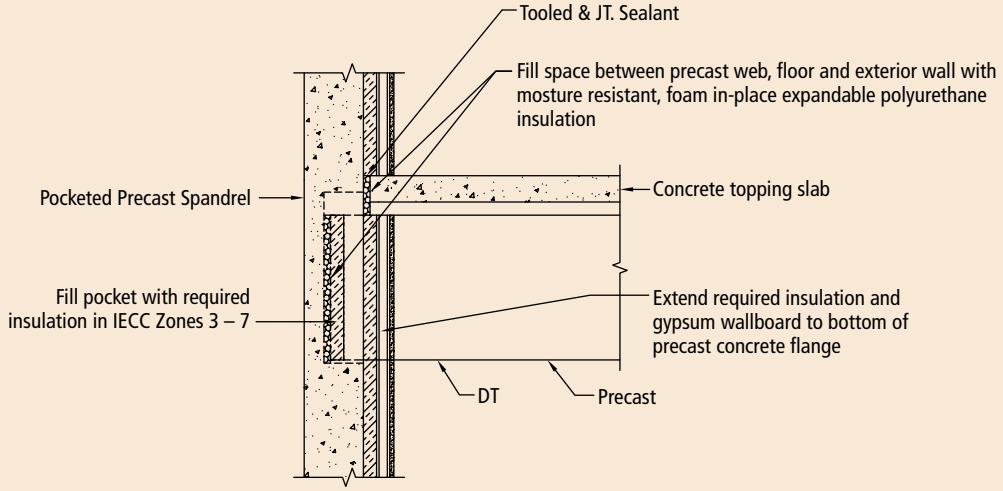

"B" Precast Concrete with Rigid Insulation
Not to scale

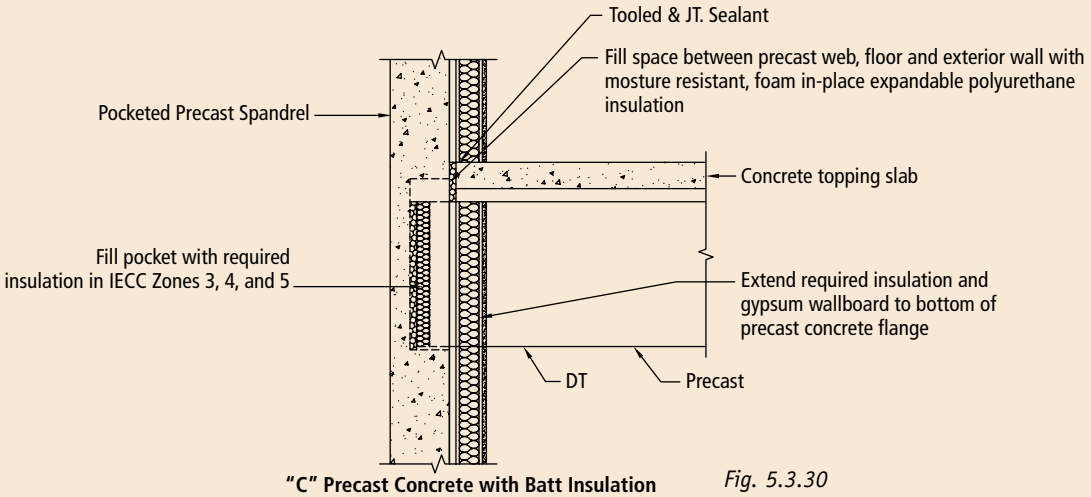

"C" Precast Concrete with Batt Insulation
Not to scale

Fig. 5.3.30
Typical pocketed loadbearing spandrel/DT detail.

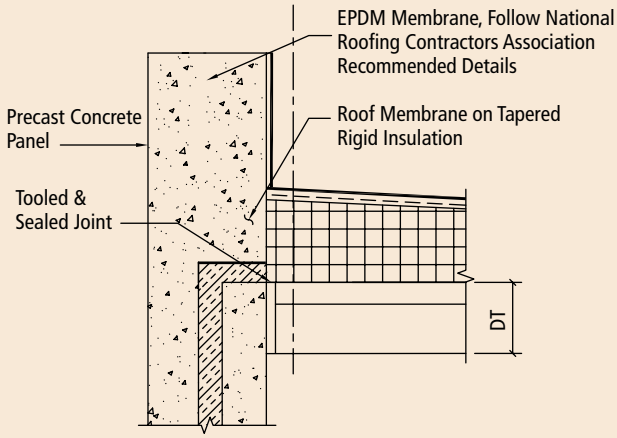

"A" Precast Sandwich Panel Wall
Not to scale

OR

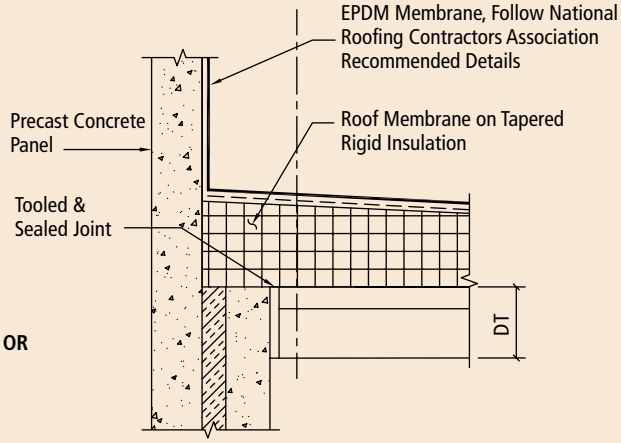

"A" Precast Sandwich Panel Wall
Not to scale

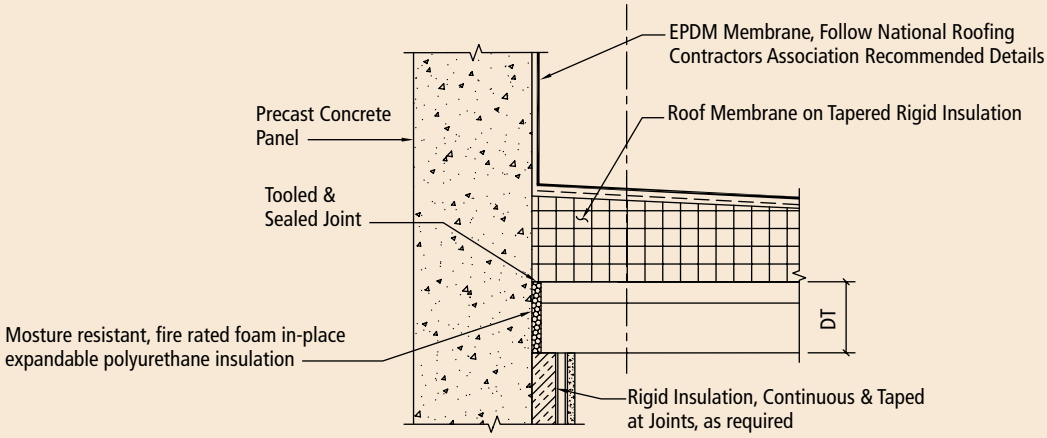

"B" Precast Concrete with Rigid Insulation
Not to scale

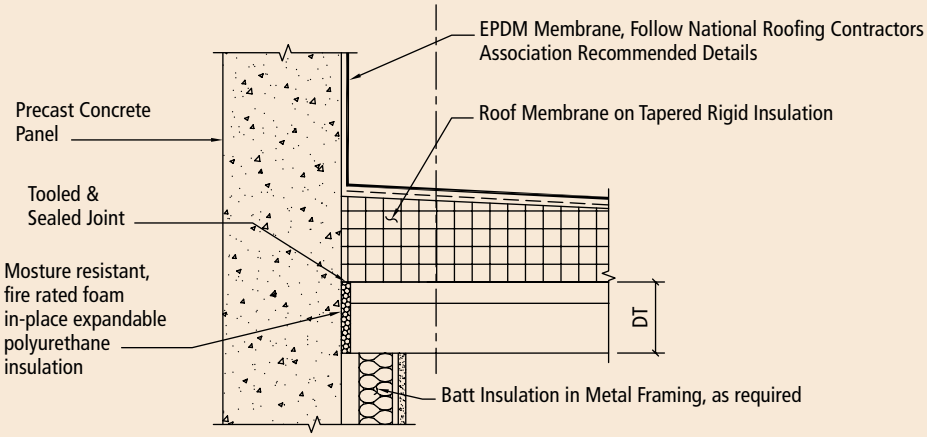

"C" Precast Concrete with Batt Insulation
Not to scale

Fig. 5.3.31 Typical roof parapet detail.

Special Applications and Building Type. Special precautions are required for buildings with high indoor humidities or spaces with sensitive electronic equipment or artifacts. These include swimming pools, ice rinks, cold storage, computer rooms, libraries, hospitals, nursing homes, museums, and some manufacturing facilities. Low permeance vapor retarders are often needed to separate indoor swimming pools or other special applications from the rest of the building.

Details. Figures 5.3.21 through 31 provide conceptual details on how to construct the precast concrete system to achieve energy savings while providing an air barrier and reducing the potential for moisture problems. The recommendations and details presented are based on specific analyses, engineering judgment, and best available practices at the time of publication. Performance testing of the details has not been performed. Detail drawings are provided in order to assist competent professionals in the detailing of the building insulation envelope. Reinforcing designations, structural connections, wythe thickness, and insulation indicated in drawings are to be used for reference only and are not intended to substitute for project specific judgment.

Water Leakage. The exterior surface of the precast concrete system acts as a weather barrier to prevent rain and snow from entering the building. As shown in Figs. 5.3.21 and 22, joints in the precast concrete generally have either two layers of sealant, or sealant and a secondary method of defense against water penetration. Joints around windows, doors, and other penetrations through the precast concrete building are designed with a primary and secondary method of defense against rainwater penetration.

Floor Systems. The provided details are for a double tee floor system. Details for hollow core floor systems will be similar, including insulation requirements. The main concept is to separate the floor slabs from the exterior concrete by insulation to reduce thermal bridges. This will reduce energy losses and the potential for condensation and moisture problems.

Figures 5.3.23 and 24 present two options for insulating floors above unconditioned spaces such as parking structures. In these cases the concrete floor acts as a semi-impermeable vapor retarder. Figure 5.3.23 with rigid insulation is preferable. If spray-on or batt insulation are used as shown in Fig. 5.3.24, it should be wrapped around the precast concrete stems.

Need for analysis. In any building with additional sources of moisture, such as from swimming pools, industrial processes, or storage of moist items, a moisture analysis of the walls and roofs for actual conditions should be performed. For instance, hospitals in cold climates often maintain RH levels at 50%, as opposed to the 20 to 40% RH in most buildings during winter in these climates. This higher RH can cause moisture problems if the building envelope is not properly designed. An analysis is also advisable for very cold, cold, mixed, or cool marine climates or other climates where experience is not available to indicate how a wall will perform. It is important to determine whether and where the temperature within the envelope system will fall below the dew point temperature. Accurate analyses take into account moisture absorption of materials as well as moisture movement through walls.

ASTM publishes an excellent book on moisture models.[17] These models predict moisture and temperature conditions in wall and roof assemblies for particular climate and indoor design conditions. The models utilize mathematical solutions to moisture and heat transfer mechanisms. Some predict moisture transfer by air movement and liquid water flow as well as vapor diffusion. Some can model the changes in material properties such as permeance and sorption with moisture content. Use of these models requires knowledge of building physics, material properties, and the model limitations.

Historically a simplified method known as the dew point method has been used to identify potential condensation problems. This is a simplified steady-state analysis that has many limitations. If used with worst case conditions that only take place a few days a year, it will identify condensation that may not be a problem due to the ability of the materials to absorb the moisture or for the system to dry within a few days. For this reason, monthly averages are generally used. Since it considers only steady-state conditions, it is not exact. The vapor diffusion properties of materials often vary with moisture content, which are not considered in the dew point method. Also, it is often frequently misused in identifying where and how much condensation occurs. However, the dew point method is a good indicator of the potential for moisture problems. The *ASHRAE Handbook of Fundamentals* and ASTM C 755 provide excellent

17 Treschsel, Heinz, *Moisture Analysis and Condensation Control in Building Envelopes*, Publication No. MNL 40, ASTM, West Conshohocken, PA, 2001. www.ASTM.org

Example No. 5.3.6 Condensation within exterior wall.

descriptions and examples of the dew point method. An example also follows.

An analysis will be performed to determine whether condensation will form within the wall for the temperature and relative humidity conditions indicated on each side of the wall.

Step 1. The vapor pressures of the indoor and outdoor air may be determined from saturated vapor pressures listed in Table 5.3.15 and the assumed temperatures and relative humidities. The actual vapor pressure is the saturated vapor pressure at the given temperature times the relative humidity:

The selection of appropriate outside air temperatures requires considerable judgment. The effects of heat stor-

Table 5.3.15 Vapor Pressures.

	Temp., °F	RH, %	Vapor Pressure at Saturation, in. Hg	Actual Vapor Pressure, in. Hg
Indoor	70	30	0.739	0.222
Outdoor	0	80	0.038	0.030

Thermal Resistance and Temperature of Insulated Wall.

		R-Value Winter	Temp. Difference, °F	Temp., °F	SVP, in. Hg
				70	0.739
A.	Surface, inside	0.68	5		
				65	0.622
B.	Gypsum wallboard, 1/2 in.	0.45	3		
				62	0.560
C.	EPS insulation (1.25 pcf), 2 in.	8.00	58		
				4	0.046
D.	Concrete, 6 in. (145 pcf)	0.38	3		
				1	0.040
E.	Surface, outside	0.17	1		
				0	0.038
	Total	9.68	70		
	U = 1/R	0.10			

Vapor Resistance and Vapor Pressure for Continuity.

		SVP, in. Hg	M or μ/n, perm	z_n, rep	Δp_n, in. Hg	P_a, in. Hg
		0.739				0.222
A.	Surface, inside			0	0	
	Primer and paint, 1 coat		2	0.5	0.033	
		0.622				0.189
B.	Gypsum wallboard, 1/2 in.		38	0.027	0.002	
		0.560				0.187
C.	EPS insulation (1.25 pcf), 2 in.		4/2 = 2	0.5	0.033	
		0.046				0.154
D.	Concrete, 6 in. (145 pcf)		3.2/6 = 0.53	1.87	0.124	
		0.040				0.030
E.	Surface, outside			0	0	
		0.038				0.030
	Total			2.90	0.192	

age in materials must be recognized, as must the fact that wall or roof surface temperatures can be higher than air temperature because of solar radiation, and colder than air temperature because of clear sky radiation. These temperature modifications vary with the color, texture, thickness, weight and orientation of the surface materials and with the intensity of the radiation. Generally the average January temperatures without solar effects and the average July temperatures with solar effects are recommended for determining the potential for condensation. The effect of solar radiation and humid outdoor conditions alter the dew point. Most building veneer systems are not waterproof and absorb moisture. When this moisture is heated by the sun, the vapor pressure in the veneer increases and drives the moisture inward.

Step 2. Determine the thermal resistance of the wall and temperatures within the wall using Eqs. 5.3.1 and 5.3.2 as in Example 5.3.1 (page 407) and 5.3.5 (page 421):

Thermal bridges are not considered in this example and would need to be analyzed separately.

The temperature existing at any point in a wall under any given exterior and interior temperature conditions is of great significance in designing problem-free building enclosures. An ability to calculate the thermal gradient permits the designer to forecast the magnitude of the movements caused by external temperature changes, to predict the location of condensation and freezing planes in the wall, and to assess the suitability of any construction. The temperature gradient will not, in itself, give the designer all the information required to select and assemble building components, but it is an essential first step.

Fig. 5.3.32 Thermal and water vapor gradients for extreme winter conditions.

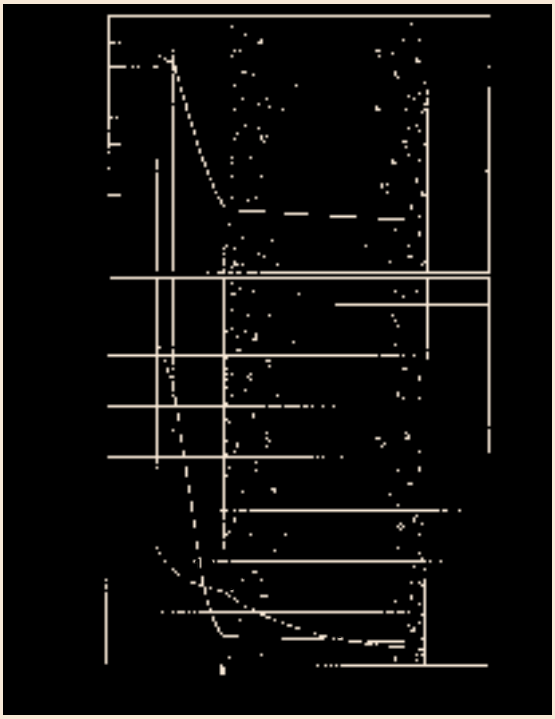

Step 3. The saturated vapor pressures at various surfaces and interfaces within the wall section may be obtained from temperatures determined in Step 2 and Table 5.3.14, page 425.

These saturated vapor pressures (SVP or Ps) are plotted in Fig. 5.3.32 to form the SVP gradient, P_s, through the wall section.

Step 4. To check the location where condensation is likely to take place, the vapor pressure gradient necessary for vapor transfer continuity, P_c, is plotted as shown in Fig. 5.3.32. The vapor pressure gradient, P_c, is obtained by a calculation procedure similar to that used to determine the temperature gradient, described in Step 2. It is based upon the total vapor pressure drop (0.222 – 0.030 = 0.192 in. Hg) and the respective vapor permeances of the different components of the wall from Table 5.3.12.

$$\Delta p_n = z_n(\Delta p_{wall}) / z_{wall} \qquad \text{Equation No. 5.3.6}$$

where:

Δp_n = vapor pressure gradient or drop through material "n", in. of mercury

Δp_{wall} = vapor pressure gradient or drop through wall, in. of mercury

z_n = vapor pressure resistance of material "n", rep (rep = 1/perm)

z_{wall} = vapor pressure resistance of wall, rep

and

$$z_n = 1/M \text{ or } n/\mu \qquad \text{Equation No. 5.3.7}$$

where:

M = vapor permeance, perms

n = thickness of material, in.

μ = vapor permeability, perm·in.

Continuous vapor flow conditions are preserved pro-

vided the actual vapor pressure, P_a, does not exceed the saturation vapor pressure, P_s. If P_a does exceed or cross P_s, condensation will occur. In this case, P_a exceeds P_s in between the insulation and concrete layers and condensation is expected to occur here. For discontinuous vapor flow (when condensation occurs), the vapor flow to and away from the condensation surface must be recalculated. The difference will be equal to the condensation rate. The vapor flow to or from a point is equal to the actual vapor pressure difference divided by the vapor resistance to or from that point.

Reducing P_a so that it is less than P_s can be achieved either by:

1. Changing the various vapor flow resistances to reduce the values of P_a. For example, add a vapor retarder on the side of the wall with the higher vapor pressure (warm side) or use an insulation with a lower vapor permeance.
2. Changing the various thermal resistances of the wall components to raise the temperature. This will raise the values of P_s.
3. A combination of two of the above items.

5.3.6.5 Air infiltration, exfiltration, and air barriers

Infiltration and exfiltration are air leakage into and out of a building respectively, through cracks or joints between infill components and structural elements, interstices around windows and doors, between the sill plate and foundation, through floors and walls, at the top and bottom of walls, and at openings for building services such as plumbing. Approximately 5 to 20% of air leakage occurs at doors and windows, and 20 to 50% occurs through walls. Infiltration and exfiltration are often a major source of energy loss in buildings. Exfiltrating air carries away heating and cooling energy, while infiltrating air may bring in moisture and pollution as well as reduce the effectiveness of a rain screen wall system.

Moisture can move into or across a wall assembly by means of vapor diffusion and air movement. Diffusion is a slow, controlled process driven only by vapor pressure differentials, and rarely causes any significant moisture accumulation. Air migration occurs from air pressure differentials independent of moisture pressure differentials. If air, especially exfiltrating, warm, humid air, can leak into the enclosure, then this will be the major source of moisture. *Condensation due to air movement is usually much greater than that due to vapor diffusion for most buildings*. However, when air leakage is controlled or avoided, the contribution from vapor diffusion can still be significant. In a well designed wall, attention must therefore be paid to the control of both air flow and vapor diffusion.

An air barrier and vapor retarder are both needed in a properly designed building envelope, and in many instances a single material can be used to provide both of these as well as other functions. The principal function of the air barrier is to stop the outside air from entering the building through the walls, windows, or roof, and inside air from exfiltrating through the building envelope to the outside. This applies whether the air is humid or dry, since air leakage can result in problems other than the deposition of moisture in cavities.

Uncontrolled air (and its associated water vapor), exfiltration in cold climates and infiltration in hot, humid climates can wreak havoc on the structure, causing corrosion and structural damage, mold and bacterial growth, and energy loss. It can also create HVAC problems by disrupting indoor air pressure relationships and degrading indoor air quality (IAQ), which can lead to health problems for sensitive individuals.

Atmospheric air pressure differences between the inside and outside of a building envelope exist because of the action of wind, the density difference between outside cold heavy air and inside warm light air creating a "stack effect", and the operation of equipment such as fans. The pressure differences will tend to equalize, and the air will flow through holes or cracks in the building envelope carrying with it the water vapor it contains. A thorough analysis of air leakage is very complex, involving many parameters, including wall construction, building height and orientation.

Air barriers (sometimes called air retarders) will reduce infiltration and exfiltration. They reduce the potential for moisture problems due to moist air migrating into a building. This moisture can be warm humid air from outside during the summer or warm conditioned air from inside in the winter.

An air barrier is required to have a leakage rate less than 0.06 cfm/ft^2 at a differential pressure of 0.3 in. H_2O (1.57 psf) according to ASTM E1677, "Standard Specification for an Air Retarder (AR) or Material or System for Low-Rise Frame Walls." This value however is considered high for buildings in Canada where a value of 0.004 cfm/ft^2 at 0.3 in. H_2O is sometimes

Table 5.3.16 – Measured air leakage for selected building materials[1].

Material	Average leakage, cfm/ft^2 of surface at 0.3 in. H_2O
Solid precast concrete wall	No measurable leakage
Aluminum foil vapor barrier	No measurable leakage
6 mil polyethylene	No measurable leakage
Extruded polystyrene insulation	No measurable leakage
Closed cell foam insulation	0.0002
3 in. polyicynene	0.001
$^1/_2$ in. fiberboard sheathing	0.31
Breather type building membranes	0.0022 – 0.71
Uncoated brick wall	0.31
Uncoated concrete block	0.41
1 in. expanded polystyrene	0.93

[1]*National Research Council, Canada www.nrc-cnrc.gc.ca*

required. This is the maximum air leakage for a total assembled air barrier system (total wall system or main areas plus joints) when tested according to ASTM E2178, "Standard Test Method for Air Permeance of Building Materials."

Materials such as precast concrete panels, polyethylene, gypsum board, metal sheeting or glass qualify as air barriers since they are low air-permeable materials when joints are properly sealed; concrete block, acoustic insulation, open cell polystyrene insulation, or fiberboard are not. Air permeances of selected materials are presented in Table 5.3.16.

Materials and the method of assembly chosen to build an air barrier must meet several requirements if they are to perform the air leakage control function successfully.

1. **Continuous.** The air barrier must be continuous throughout the building envelope. For example, the low air permeability materials of the wall must be continuous with the low air barrier materials of the roof (e.g., the roofing membrane) and connected to the air barrier material of the window frame. All of the air barrier components should be sealed together so there are no gaps in the envelope airtightness. Where interior finishing (drywall) serves as the air barrier, if it is not finished or continuous above suspended ceilings or behind convector cabinets, there will be large gaps in the air barrier system's continuity. Connection should be made between:
   a. Foundation and walls.
   b. Walls and windows or doors.
   c. Different wall systems, such as brick and precast concrete, or curtain wall and precast concrete, and corners.
   d. Joints in gypsum wallboard and precast concrete panels.
   e. Walls and roof.
   f. Walls, floors and roof at construction, control, and expansion joints. The interior air barrier above a dropped ceiling needs to be connected to the underside of the above floor.
   g. Walls, floors, and roof to utility, pipe, and duct penetrations.
2. **Load Capacity.** Each membrane or assembly of materials intended to support a differential air pressure load must be designed and constructed to carry that load, inward or outward. This load is the combined wind, stack, and fan pressures on the building envelope. If the air barrier system is made of flexible materials, then it must be supported on both sides by materials capable of resisting the peak air pressure loads; or it must be made of self-supporting materials, such as board products adequately fastened to the structure. The air barrier should be designed so that adjacent materials are not displaced under differential air pressures. Tape and sealant must also resist these pressures and have long-term resistance. Concrete is the ideal material for an air barrier because of its durability and strength in resisting these loads. Sealant between panels and at joints must be designed to resist these loads.
3. **Joints.** The air barrier of each assembly should be joined to air barriers of adjacent assemblies in a manner allowing for the relative movement of the assemblies and components due to thermal and moisture variation, creep, and structural deflection. These joints in the air barrier and joints at penetrations of the air barrier system should be of low air permeability materials.

4. **Durable.** The air barrier assembly must be durable in the same sense that the building is durable, and be made of materials that are known to have a long service life or be positioned so that they may be serviced from time to time.

5. **Vapor Permeance.** When a vapor retarder is used on the inside of insulation in a cold or mixed climate [see vapor retarder section, page 423], an air barrier used on the outside should be permeable to water vapor. If both the inside vapor retarder and the outside air barrier are not permeable, then a "double vapor retarder" condition is created. Moisture that gets between the two through rain penetration or leakage through joints will not be able to readily evaporate and disperse to the interior or exterior. Vapor permeability allows moisture behind the air barrier to exit the wall by vapor diffusion to the outside. According to ASTM E1677:

   "In a moderate to cold climate the opaque wall must either be permeable to water vapor, or when the permeance of the materials on the exterior is less than 1 perm it may be beneficial to insulate on the outside. When the exterior is permeable, moisture vapor from the opaque wall can escape to the outdoors without accumulating in the wall. When the exterior is insulated, the temperature of the opaque wall is increased to minimize wall moisture accumulation. Designers should evaluate the amount of insulation necessary to keep condensation from forming in the wall assembly when the air barrier is rated as a vapor retarder less than 1 perm and exterior applied."

Building Pressure. In warm humid climates, a positive building pressure will help prevent the infiltration of humid air. In cold climates the building pressure should be neither strongly positive or negative. A strong negative pressure could pull in combustion products from street traffic. A strong positive pressure could drive moisture into the building walls and other elements.

Adequate Ventilation. Because concrete buildings have less air leakage, heating and cooling systems should have adequate air intake systems to provide fresh air in buildings. This is more critical in concrete than steel frame buildings because there is less air leakage. Without an adequate intake source, concrete buildings are under negative pressure, potentially resulting in poor indoor air quality. In all cases, guidelines of ANSI/ASHRAE Standard 62[18] should be followed for proper ventilation of indoor air.

Application. The location of the air barrier in the wall system is dependent on the wall construction and climate. Precast concrete as a material acts as an air barrier and has a negligible air leakage and infiltration rate. A properly designed and constructed precast concrete building will save energy due to this low infiltration. This requires the air barrier be continuous by sealing joints between precast concrete panels, openings at connectors, around door and window frames, and at penetrations. The building envelope should provide continuous resistance to air flow through joints at floors, ceilings, and roof. Gypsum wallboard can act as an air barrier if the floor/wallboard and ceiling/wallboard joints are tightly fitted and sealed with a joint sealant.

Air barrier membranes and building wraps such as Tyvek® are being used more frequently in new construction. They are not required in precast concrete buildings because the concrete acts as an air barrier and has a lower air permeance than many of the available membranes and wraps (see "breather type membranes" in Table 5.3.16).

In cold climates (Zones 5, 6, and 7), it is strongly recommended that the visible interior surface of a building envelope be installed and treated as the primary air barrier and vapor retarder. A concrete panel with the concrete on the indoor surface generally serves this dual function as air barrier and vapor retarder. Where floors and cross walls are of solid concrete, it is necessary to seal only the joints, as floors and walls themselves do not constitute air paths. Where hollow partitions, such as steel studs, are used, the interior finish of the envelope can be made into the continuous air barrier. Where this is impractical, polyethylene film should be installed across these junctions and later sealed to the interior finish material. Where it is impractical to use a concrete panel system as the continuous air barrier system, an interior finish of gypsum wallboard, or plaster, painted with two coats of vapor retarding paint, will provide a satisfactory air barrier/vapor retarder in many instances.

While it is preferable that the air barrier system be placed on the warm indoor side of an insulated assem-

18 ASHRAE Standard 62-2004, "Ventilation for Acceptable Indoor Air Quality," American Society of Heating, Refrigerating, and Air-Conditioning Engineers, Atlanta, www.ASHRAE.org

bly, where thermal stresses will be at a minimum, it is not an essential requirement. (This does not necessarily mean on the inside surface of the wall.) The position of the air barrier in a wall is more a matter of suitable construction practice and the type of materials to be used. However, if an air barrier membrane is used and is positioned on the outside of the insulation, consideration must be given to its water vapor permeability, as discussed in Item No. 5. One rule of thumb is to choose an air barrier material on the outside that is 10 to 20 times more permeable to water vapor diffusion than the vapor retarder material on the inside of the wall.

In warm and humid climates (Zones 1A, 2A, and 3A), an air barrier (or low air-permeance materials properly sealed) on the outside of the wall works well because it helps prevent the infiltration of the warm humid air. An architectural precast concrete panel with appropriate joint sealant will serve as an air barrier in this climate. Exterior surfaces should be less permeable than inside surfaces, once again, to help reduce the amount of moisture entering the walls. Note that this is the opposite of what is recommended for cold climates.

In mixed, dry warm, and cool marine climates (see Table 5.3.11), an air barrier (or properly sealed low air-permeance materials) is recommended. An architectural precast concrete panel with appropriate joint sealant will serve as an air barrier in this climate.

5.3.6.6 Considerations at windows

The principal potential moisture problems with windows are the following:

1. Poor sealing of the wall air barrier and vapor retarder at window joints with the wall.
2. Penetration of rainwater into the wall construction beneath the windows.
3. Condensation of moisture or frost formation on the inside of windows in cold weather and subsequent drainage of the water onto the sill and into the wall construction.
4. Excessive leakage of warm moist air into the building in summer weather that adds to the air conditioning load.

Air barriers and vapor retarders must be carefully sealed at window openings to prevent air leakage into wall construction at the window frames. Likewise the design of window sills and the sealant techniques must be such that rainwater drainage is diverted to the outside without wetting the insulated construction beneath the windows. This requires that thermal insulation be held away from the collecting surface so moisture can proceed down to collection systems without wetting the insulation. Impaling pins allow this to be accomplished easily, and they are available with shoulders holding back-up discs and insulation away from the panel.

Double and triple glazed windows should be used in Climate Zones 4, 5, 6, and 7 where there are extended periods of cold weather to reduce surface condensation and drainage. An indoor relative humidity of 40% can be maintained without excessive condensation on double-glazed windows for outside temperatures down to 15ºF. At colder temperatures, indoor RH levels are generally lower and the potential for condensation will generally be lower. Windows with argon fill allow for colder temperatures before condensate accumulates. The *ASHRAE Handbook of Fundamentals* provides more guidance on condensation. The drainage of window condensation should not be allowed to remain on the window sills or to run down the inside walls. Windows in hospitals and swimming pool areas are exposed to higher than average indoor RH levels in cold climates and must be carefully designed to prevent condensation.

Excessive window leakage can be avoided by specifying the maximum acceptable leakage observed when windows are tested in accordance National Fenestration Rating Council (NFRC www.NFRC.org) Test Method 400. Air leakage should not exceed 0.4 cfm/ft^2. These values are available from the manufacturer.

5.3.7 Application of Insulation

Where wall insulation is required in a building, it may be applied to the precast concrete panel (normally to the interior surface) or it may be fully incorporated in the precast concrete panel, resulting in a sandwich wall panel.

There are several methods to apply insulation to large, flat precast concrete surfaces:

1. Supplementary framing (e.g. steel studs) can be added to provide cavities for the installation of batts or rigid insulation and to support subsequent components of the assembly. There should be an air space between the framing and the panels to minimize thermal bridging. Additionally, batts and

other moisture sensitive materials should never be in contact with concrete, especially concrete that is subjected to wetting by rain or other sources of moisture.

2. Rigid insulation can be fastened to concrete surfaces with adhesives, by impaling it on adhered pins ("stick clips"), and with various types of furring and mechanical fasteners.

Adhesives: This is the most obvious method of fastening anything to a large flat surface and there are a number of adhesives available for this use. Selection of the proper adhesive is important. It should be compatible with the type of insulation being used. The vehicles or thinners in some adhesives will attack foam plastic insulation. Also, some protein-based adhesives can provide nutrition for fungi and other micro-organisms unless they have preservatives included in their make-up.

The adhesive should not be applied in daubs. The use of daubs of adhesive creates an air space between the surface and the insulation. If the insulation is on the inner surface of the assembly, warm moist air circulating in this space will cause condensation. If the insulation is on the outer surface of the assembly, cold air circulating in this space will "short circuit" the insulation.

It is better to apply a full bed of adhesive or a grid of beads of adhesive (Fig. 5.3.33). A full adhesive bed is the preferable method from an adhesion point of view but where it is on the cold side of the insulation (e.g., applying insulation to the interior surface) it may act as a vapor trap preventing drying of any moisture which penetrates the interior air/vapor barrier. In this situation therefore the grid approach should be used.

Stick Clips: These are thin metal or plastic pins with a large perforated flat head at one end. The head is fastened to the concrete surface with a high quality adhesive which keys into the perforations. The clips are applied in a grid pattern, then the insulation is impaled on the pins and secured in place with a type of spring washer which is simply pushed over the end of the pin against the insulation. Sharp "teeth" on the washer grip the pin (Fig. 5.3.34). Although this method also relies on adhesive, the entire surface does not have to be covered, thus making it easier to clean the sur-

Fig. 5.3.33 Application of rigid in with adhesives.

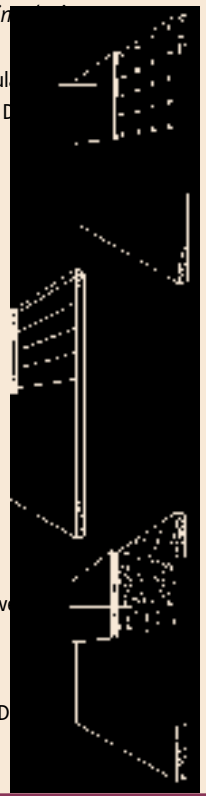

Fig. 5.3.34 Use of stick clips to install rigid insulation.

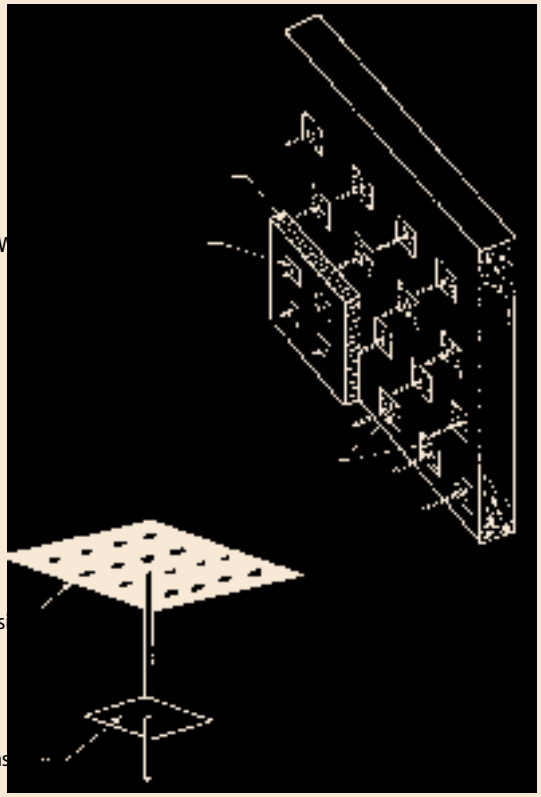

Fig. 5.3.35 Furring system.

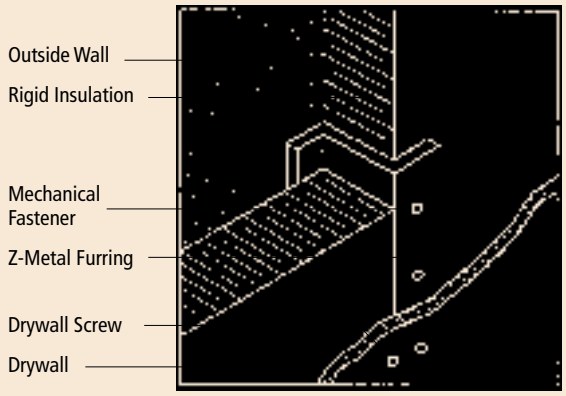

face and permitting the use of high performance (and hence costly) adhesives. As previously discussed, metal stick clips will reduce the R-value of the insulation. For example, metal pins representing 0.06% of an insulated panel area can reduce the panel R-value by 6%. Insulation would retain its full R-value if plastic pins are used.

Furring Systems: There are a number of types of plastic, wood, or metal furring which can be applied over the insulation and fastened, through it, to the concrete surface. Figure 5.3.35 illustrates one of the approaches. The furring is usually applied along the joint between two insulation boards so that one piece of furring contributes to the support of two insulation boards. Depending on the size of the insulation boards and the amount of support required by any subsequent finish, furring may also be applied in the middle of the insulation boards. Metal furring will decrease the effectiveness of the insulation and may also require special preparation of the insulation. The decrease in the R-value of the insulation due to metal furring can be determined using Table 5.3.8, page 411.

The insulation may be held in place temporarily prior to application of the furring by light daubs of adhesive. These should be very light to avoid holding the insulation away from the surface as discussed above in the section on adhesives.

The furring can be fastened with powder-driven fasteners or a special type of concrete nail which is driven into a predrilled hole. The available length of fasteners usually limits the thickness of insulation to about 4 in.

Where this method is used to apply insulation to the inside of a wall, the interior finish is applied by screwing or nailing it to the furring members.

Insulation may be plant or jobsite applied:

1. Mechanical; Most commonly performed at jobsite. If done in precast concrete plant, see note below.
2. Adhesive; As above.
3. Spraying; Normally accomplished at jobsite after installation. If done in precast concrete plant, see note below.
4. Poured; Face to be insulated must be face-up during casting. This permits simple application of insulation following concrete casting and initial curing. Very lightweight concrete should be checked for variation due to shrinkage to avoid possible delamination. For soft insulations the note below is also valid.
5. Wet Application; Insulation should have a bondable surface. Shear ties should be used between concrete and insulation.

Note: For all insulation applied in the precast concrete plant, by whatever method, the initial cost saving in application should be weighed against the cost of added protection during handling and transportation and possible protection against inclement weather. The latter will depend mostly on the type of insulation used.

Good design development of any wall systems takes a good understanding of all components within that wall assembly. In cold weather climates, it is desirable to locate the wall insulation so it mates easily with the roof insulation. This approach can be achieved with precast concrete cornice or parapet panels, either single-wythe or in sandwich panels.

Where precast concrete cladding is applied over a previously erected wall, as would be the case with a concrete end shear wall (Fig. 5.3.36), it is necessary to leave holes in such walls for access to the connection points for the precast concrete panels. Care must be taken to fill these holes with insulation after the precast concrete panels are installed in order to maintain the integrity of the envelope's airtightness and thermal resistance. The thermal consideration is especially important where the insulation is installed on the outer surface of the inner wall prior to erection of the precast concrete panels, when recommended to avoid thermal bridges at the slabs. One solution is to fill around the panel connections with pre-packaged, foam-in-place

Fig. 5.3.26 Cladding erected over previously erected wall.

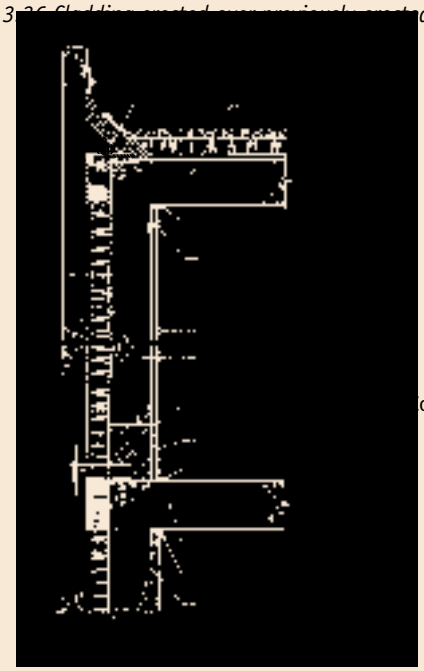

onnection

for Access to Connection

rete Panel

nish

Vertical Section at Spandrel/Soffit

urethane. The effect of these holes on the envelope's airtightness will be less of a concern where the approach of treating the interior finish as the primary air barrier is adopted. This is not to suggest that the holes should not be properly sealed when this approach is adopted. They also represent weaknesses in the wall's secondary line of defense against rain penetration.

Access to the back of the panels for sealing the joints is not a problem where the inner wall is erected after the precast concrete panels, and where the inner wall is a steel stud type, or where there is no inner wall. This, of course, assumes the panel joints are offset from the slabs and cross-walls or exterior columns.

5.3.8 Precast Concrete Sandwich Panels

Precast concrete sandwich wall panels can provide an aesthetically pleasing, durable exterior finish, a paint-ready, durable interior surface, and effective thermal and moisture protection for a building. Such panels normally comprise an exterior layer (or wythe) of concrete, a layer of rigid, board insulation, an interior layer of concrete, and a wythe connector system passing through the insulation, tying the layers of concrete together. If required, the panels can also include an external air layer so that they can function as part of a rain-screen system.

Precast concrete sandwich walls are ideally suited for energy conservation. In addition to the low thermal conductivity (high R-value) of the included insulation layer, concrete sandwich walls include the mass and heat capacity of concrete, providing thermal damping (See Section 5.3.5, page 412). A range of R-values can be obtained by varying the insulation thickness and material or, in some cases, by varying the unit weight of the concrete. The effects of thermal damping can vary with the climate and the building use. However, a concrete sandwich wall will almost always provide both reductions and delays of the peak loads affecting a building. Therefore, even with equal R-values, a concrete sandwich wall will provide greater energy savings than a wall constructed of lightweight (low mass) materials. This effect is recognized by the major building codes and can be considered during the panel design.

In addition to providing insulation for the building, sandwich panels must resist structural effects, including lateral forces, gravity loads, and temperature effects. Lateral forces may include seismic, wind, soil, and blast effects. Gravity loads can include self-weight, as well as loads imposed by floor or roof structures. Temperature effects arise due to the natural temperature differential that will occur through the thickness of the sandwich panel, as well as the temperature gradients that must occur through the thickness of each concrete layer.

In general, sandwich panels are considered to be

loadbearing or cladding (non-loadbearing) panels. Both panel types must be designed to resist lateral forces applied normal to the plane of the panel and may be designed to resist in-plane forces applied by roof or floor diaphragms.

Unlike panels with post-installed insulation systems, precast concrete sandwich panels provide protection to the insulation layer against flames and heat. They therefore limit the production of toxic gases during building fires and do not promote the spreading of flames to adjacent components. Also in contrast to panels with post-installed insulation systems, precast concrete sandwich panels protect the insulation against rodent and impact damage. Finally, in contrast to panels with interior, post-installed insulation, properly detailed precast concrete sandwich panels do not create conditions that support mold growth.

Sandstone-colored precast concrete, with two tones of aggregate, creates a banding effect on the new 8-story county hospital façade, Fig. 5.3.37. Most of the building (98,000 sq ft) is clad with precast concrete insulated sandwich wall panels for energy efficiency and to eliminate condensation. The panels feature a 2 in. exterior wythe, 2 in. of rigid insulation and, a 6 in. interior wythe. The design team wanted a building that could be maintained without difficulty and that would retain its consistency of texture and color for many years.

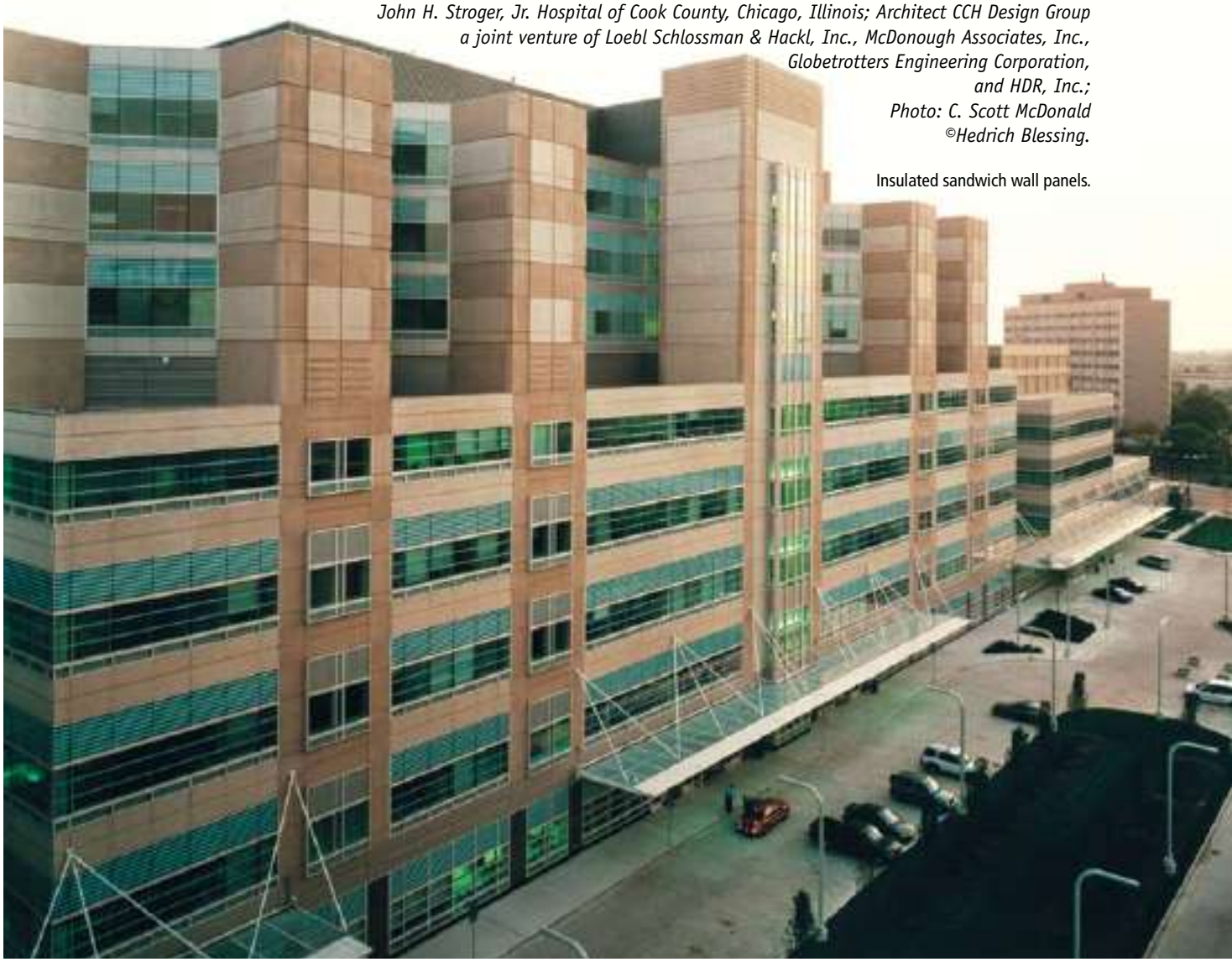

Fig. 5.3.37
John H. Stroger, Jr. Hospital of Cook County, Chicago, Illinois; Architect CCH Design Group a joint venture of Loebl Schlossman & Hackl, Inc., McDonough Associates, Inc., Globetrotters Engineering Corporation, and HDR, Inc.; Photo: C. Scott McDonald ©Hedrich Blessing.

Insulated sandwich wall panels.

Fig. 5.3.38
Academic Facility for the John F. Kennedy Special Warfare Center, Fort Bragg (Fayetteville), North Carolina; Architect: LS3P Associates, Ltd., Photo: LS3P Associates, Ltd.

Insulated sandwich wall panels with exposed interior.

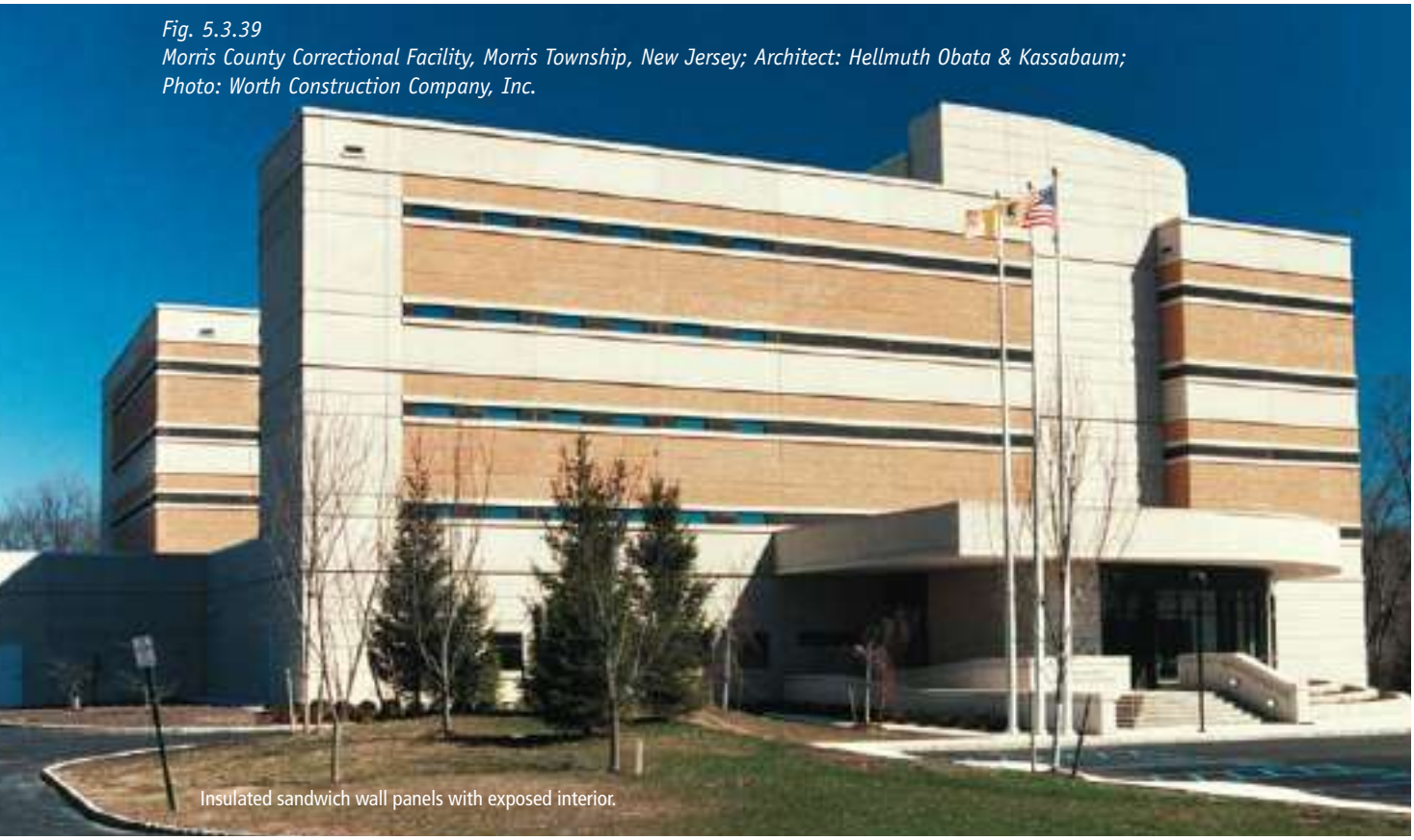

Fig. 5.3.39
Morris County Correctional Facility, Morris Township, New Jersey; Architect: Hellmuth Obata & Kassabaum; Photo: Worth Construction Company, Inc.

Insulated sandwich wall panels with exposed interior.

The use of insulated architectural precast concrete panels for a military academic facility, Fig. 5.3.38, afforded several advantages over other types of cladding. It was a cost effective system, providing both the exterior and interior finish. The interior surface was given a light broom finish and painted. Also, overall construction time was reduced due to rapid installation of the panels.

Figure 5.3.39 is a six story pre-sentencing facility for temporary housing of inmates. The building uses precast concrete insulated concrete sandwich panels which have an architectural appeal to blend with corporate office buildings in the immediate vicinity. The precast concrete insulated panels incorporated 2 in. of rigid insulation between a structural wythe of 5 in. and an architectural wythe of 4 in. Thin desert ironspot brick was cast in for contrast to the light-beige precast concrete. Banding which incorporated black glazed brick was used to mask the horizontal prison cell windows. Cell areas utilized the thermally efficient panel as the interior surface in inmate cell areas.

Insulated sandwich wall panels faced with thin brick were substituted for the traditional cavity-wall construction in the school building, Fig. 5.3.40. This allowed the construction time to be reduced by nearly 20% over a brick and block structure. It also avoided

Fig. 5.3.40
Jack Britt High School, Fayetteville, North Carolina; Architect: Shuller Ferris Lindstrom & Associates.

Fig. 5.3.41 Non-composite and composite insulated panels.

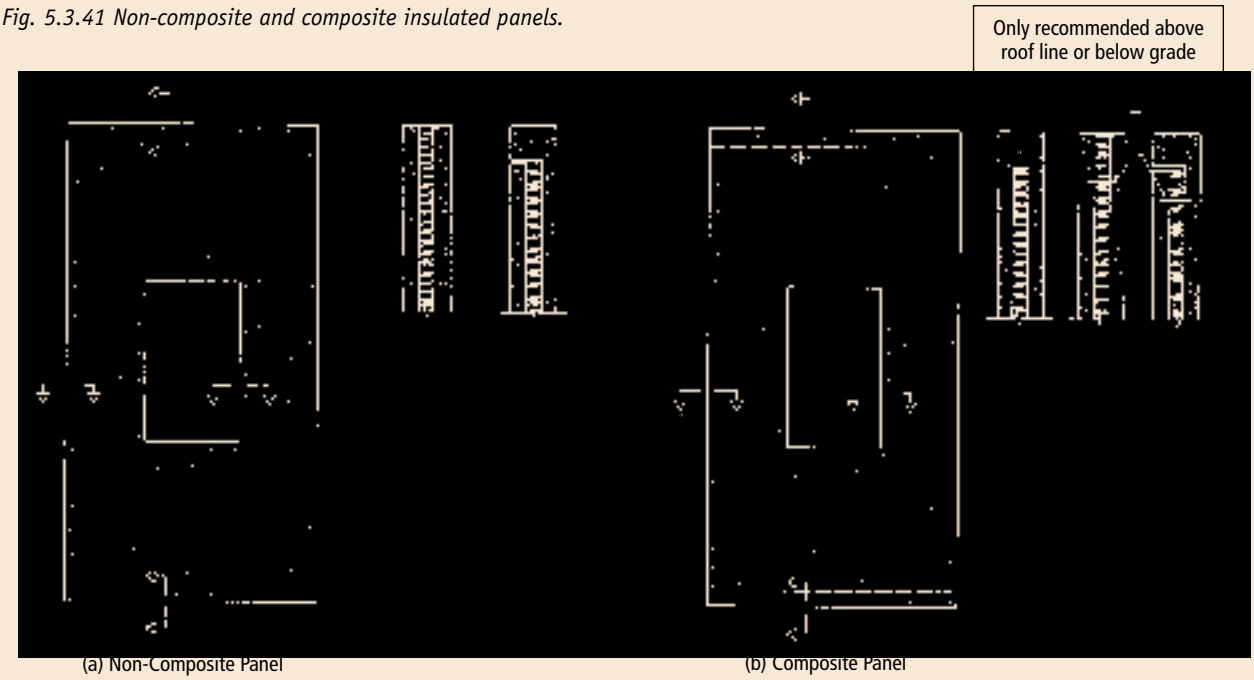

the real possibility that a shortage of skilled masons in the area could seriously stall the project.

Providing the entire façade package in one unit reduces the number of trades and condenses the responsibility into one supplier, providing a cost-effective solution.

Because of their unique construction, concrete sandwich panels can act as their own insulated foundation walls, extending directly from the supporting footing. This is very important in reducing heat losses to the ground, especially where deep frost lines prevail. Also, by allowing the roof connection to be contained on the interior layer only, sandwich panels can provide a continuous insulation envelope, even at the roof-to-panel connection.

Concrete sandwich panels can be designed to act as fully composite, partially composite, or non-composite wall elements, Fig. 5.3.41. The amount of composite action is a function of both the rigidity and the locations of the inter-layer connectors. More rigid connectors allow a greater percentage of the external forces to be resisted by axial loads within the concrete layers. As the rigidity of the connector system is reduced, the portion of external load resisted by axial loads is also reduced, leading to a reduction in strength. Further, as the rigidity of the connector system is reduced, the shear displacement between concrete layer increases, leading to significantly reduced panel stiffness.

A common rigid connection system comprises distributed steel elements resembling bar joists, with a chord member embedded in each concrete layer and with web members crossing the insulation plane. Another common rigid connector system comprises discrete, through-thickness solid sections distributed along the panel length and width.

Although a fully composite panel normally provides the lightest and thinnest wall section for resistance of lateral or gravity loads, the negative effects of the resulting thermal bridges (reduced thermal performance of panels as well as creation of potential zones of surface condensation) must be evaluated by the design team.

Depending on the rigidity of the connector system (ties or ribs) wythe interaction may be total or partial. Non-composite panels (Fig. 5.3.41[a]) are those in which one wythe is supported from the other by relatively flexible ties and/or hangers that allow differential movement of the wythes with changing temperatures and humidity conditions. Non-composite panels with an air space allow for ventilation of the outer wythe and pressure equalization. For non-composite panels, one wythe is usually assumed to be "structural" and all loads are carried by that wythe. The structural wythe is normally thicker and stiffer than the non-structural wythe, and is usually located on the interior (warm) side of the panel to reduce thermal stresses due to temperature variation. Occasionally it may be the exterior wythe, particularly in the case of sculptured panels such as ribbed panels, that serves the structural function. Note that metal ties or concrete that penetrate the insulation may reduce the panel's R-value, however, non-metallic ties are thermally efficient.

For equal overall thickness of panel, a composite element (Fig. 5.3.41[b]) will have greater lateral stiffness. However, because the deformation of the outer wythe will affect the inner wythe, experience indicates that the lateral bowing of composite panels is slightly more than that of non-composite panels. While the introduction of prestress in both wythes of a composite panel has no effect on thermal bowing, it can be used to induce an inward bow to counteract the tendency of the panel to bow outwards, thus improving the behavior of the element. While this is difficult to calculate, it is a workable solution used successfully by experienced precasters.

Panels with full thicknesses of concrete with or without insulation, or openings with surrounding full thicknesses of concrete, are not recommended because:

1. The full thicknesses of concrete act as restraints between the two concrete layers, each of which is subjected to significantly differing deformations, thus developing forces which may lead to cracking if the panel is not prestressed. This is true of any composite panel.
2. The full thicknesses of concrete without insulation act as significant thermal bridges and will reduce the insulating effectiveness of the panel, as well as possibly causing local condensation and discoloration.

Some precasters have reported successful use of panels with concrete at full thickness at top and bottom only. Such an arrangement provides less restraint than a full thickness of concrete on all sides; however, it is suggested that this be used with caution and based on previous experience.

Precasters who advocate the use of non-composite sandwich panels emphasize the advantage of the structural wythe being protected by the insulation from extremes of temperature, thus minimizing the bowing of the structural wythe and eliminating thermal stresses in the structure. The exterior wythe is free to expand and contract with variations in temperature.

Precasters who advocate the use of composite panels point out that the structural wythe of a non-composite panel must carry all of the applied loads in addition to the weight of the other wythe thus increasing overall dimensions, weight and expense. However a composite panel can be designed to share the loads between the wythes thus reducing dimensions, weight, and expense.

Insulation and concrete thermal properties are previousley discussed in Section 5.3.3. The insulation should have low water absorption (ideal) or a water-repellent coating (less than ideal) should be used to minimize absorption of water from the fresh concrete, as this can have an adverse effect on the thermal performance of the insulation. In all cases, rigid cellular insulation used in sandwich panels should not be moisture sensitive. Extruded polystyrene board insulation (XPS) is moisture resistant.

The physical properties of the insulations typically used in sandwich panels are listed on Table 5.3.17(a). The ASTM references of these insulations are listed in Table 5.3.17(b).

In some facilities, sandwich panels are exposed to extremely high interior operating temperatures. The lack of the necessary capability of an insulation to withstand these temperatures can cause the panel to fail to perform as intended throughout the lifetime of the building. For instance, polystyrene insulation has a relatively low melting temperature. This type of insula-

Table 5.3.17 (a) Properties of Insulation.

	Polystyrene						Polyisocyanurate		Cellular Glass
	Expanded			Extruded			Unfaced	Faced	
Density (pcf)	0.7-0.9	1.1-1.4	1.8	1.3-1.6	1.8-2.2	3.0	2.0-6.0	2.0-6.0	6.7-9.2
Water absorption (% volume)	<4.0	<3.0	<2.0	<0.3			<3.0	1.0-2.0	<0.5
Comp. strength (psi)	5-10	13-15	25	15-25	40-60	100	16-50	16	65
Tensile strength (psi)	18-25			25	50	105	45-140	500	50
Linear coeffient of expansion (in/in/°F) x 10^{-6}	25-40			25-40			30-60		1.6-4.6
Shear strength (psi)	20-35			—	35	50	20-100		50
Flexural strength (psi)	10-25	30-40	50	40-50	60-75	100	50-210	40-50	60
Thermal conductivity (Btu-in/hr/ft^2/°F) at 75°F	0.32-0.28	0.26-0.25	0.23	0.20			0.18	0.10-0.15	0.35
Max. use temp.	165 °F			165 °F			250 °F		900 °F

Note: 1 lb per cu ft = 16.02 kg/m^3, 1 psi = 0.006895 MPa; 1 in/in/°F = 1.800 mm/mm/°C; 1 Btu-in/hr/ft^2/°F = 0.1442 Wm/m^2/C, °C = (°F - 32)/1.8.

Table 5.3.17 (b) ASTM Standard References for Various Types of Insulation.

Type of Insulation	ASTM Designation	ASTM Type
Expanded polystyrene	ASTM C-578	Types I, II, VIII, IX, XI
Extruded polystyrene	ASTM C-578	Types IV, V, VI, VII, X
Polyurethane	ASTM C-591	Types 1, 2, 3
Polyisocyanurate	ASTM C-591	Types 1, 2, 3

tion will begin to shrink and warp when temperatures reach 165ºF. Selection of a protected polyurethane or polyisocyanurate insulation with melting temperatures above 210ºF can prevent possible structural weakness or thermal instability. Calcium silicate insulations can withstand higher temperatures. The specifier should choose the insulation to be compatible with and resistant to the conditions to which it will be exposed.

The required thickness of the insulation will be determined by the thermal characteristics of the material and the design temperatures of the structure. A minimum thickness of 1 in. is recommended. The deflection characteristics of the inter-wythe connectors should be considered in relation to the insulation thickness. Although one does not necessarily limit the other, the two must be designed to be compatible.

Wythe connectors should be installed with minimal voids in the insulation to avoid forming concrete thermal bridges between wythes. Voids should be filled with insulation. Low conductivity connectors greatly improve thermal performance.

The maximum thicknesses and sizes of insulation commercially available, consistent with the shape of the panel, are recommended. This will minimize joints in the insulation and the resulting thermal bridges. Taped (with a tape that is not moisture sensitive) or glued abutting ends of single layer insulation, or staggered joints with double layer insulation, will minimize thermal inefficiencies at joints, if the desired thickness is not available in one sheet.

The insulation itself may be capable of transferring a certain amount of shear between the wythes, the value being dependent upon the thickness and properties of the insulation. It may be necessary to provide measures to break the bond between the insulation and the concrete wythes of non-composite panels by physical or chemical methods to eliminate unintended restraint. This will allow relatively free movement between the wythes for the dissipation of temperature and other volume change stresses. While such bond may be destroyed in time, it is strongest at the initial stages of casting, when the concrete has its least tensile strength, and therefore most susceptible to cracking.

Panels may be manufactured by incorporating bond-breakers of polyethylene sheeting or reinforced paper sheets over the insulation, applying form release agents to the insulation, or by using two layers of insulation with staggered joints which will allow movement between the two insulation sheets. This intended movement may be inhibited if the layers are not placed in a level plane. Similarly, the use of sheeting as a bond-breaker can be negated by unevenness in the bottom layer of concrete and hence the insulation. Under certain conditions, air gaps between the insulation and the outer wythe also prevent shear transfer.

The use of tape or sheeting to bridge insulation joints with a single layer of insulation minimizes concrete bridges between the wythes. Polyethylene sheeting on the warm side of the insulation also serves as a vapor retarder. In this case, it is necessary to seal around mechanical ties between the wythes to provide continuity of the vapor retarder. It should be noted that a 3 in. minimum thickness of the inner structural concrete wythe is normally regarded as a satisfactory vapor retarder, provided that it is quality concrete, has a low water-to-cement ratio and remains crack-free. See Section 5.3.6 for appropriate placement of vapor retarders depending on climate.

Wythe minimum thicknesses are dependent upon structural requirements, finish, reinforcement protection, handling considerations, and past experience. Wythes should be kept close to equal thicknesses for composite panels.

In order to minimize the temperature differential across the thickness of the non-structural wythe (in non-composite panels), it should be as thin as architectural details will permit. A non-composite panel usually requires a thicker wythe(s) than a composite panel with the same load and span conditions. The following limitations are applicable:

1. At the thinnest point, the thickness of the reinforced panels should not be less than 2 in., but preferably a minimum of $2^1/_2$ in. (or $1^1/_2$ in. without reinforcing bar in the area).
2. Thickness should be sufficient to provide proper reinforcement cover.
3. Thickness should be sufficient to provide required anchorage of the wythe connector devices.
4. At no point should the thickness be less than three times the maximum aggregate size.

The thickness of the structural wythe should be determined by structural analysis, and by the need to accommodate architectural details. In general, the structural wythe should not be less than 3 in. thick. In certain cases, a thinner wythe may be successfully used

with rather high quantities of reinforcement and with a higher risk of cracking and bowing. If the wythes are prestressed, the wythe should not be less than 2 in. thick. The wythe thickness may be controlled by the specified fire resistance for the project.

The other limitations listed above for the non-structural wythe also should be considered. Loadbearing structural wythes are, in most cases, supported at the bottom edge. They may have a lateral tie near the top and a mid-height connection to the adjacent panels to prevent differential bowing. Non-loadbearing composite or non-composite panels can be supported by hanging from suitably designed connections. It is worth noting that top hung panels eccentrically supported will bow outward less than the bottom supported units.

Panel Size. Sandwich wall panels are available in almost all of the same shapes and sizes as solid panels. As with solid panels, the larger the panel, the greater the economy. The maximum size is limited only by the handling capability of the plant, erection equipment, transportation restrictions, and the ability of the panel to resist the applied stresses. Local precasters should be contacted to verify optimal panel configurations. Overall sandwich panel thicknesses have varied from 5 in. to greater than 12 in. Insulation thicknesses commonly vary from between 1 and 6 in.

Special procedures which will reduce the differential shrinkage magnitude, or magnitude of temperature differential allow for the production of larger panels. Such procedures include: (1) use of low shrinkage concrete, and (2) jointing of the non-structural wythe. Any joints should preferably be complete all the way to the insulation and should be provided at corners of large openings in the panels.

Wythe Connectors. Wythe connectors serve a variety of functions. If the panel is cast and stripped in a flat position, the connectors must be capable of resisting the tension created between the wythes during stripping. The connectors are also used to transfer wind and seismic forces between the wythes. In composite panels, the connectors provide resistance to in-plane bending shear between the wythes. In non-composite panels, the type and arrangement of connectors are detailed to minimize in-plane shear transfer so that the wythes may act independently. Wythe connectors may also be required to support the weight of the architectural wythe when the wall panel is bearing only on the structural wythe.

Wythe connectors may be used in various combinations. For example, in a composite panel design, solid blocks of concrete may be used for in-plane shear transfer while metal C-ties can be used to prevent the wythes from separating. Mechanical wythe connectors penetrate the insulation and are bonded to each wythe.

Fig. 5.3.42 Non-composite and composite insulated panels.

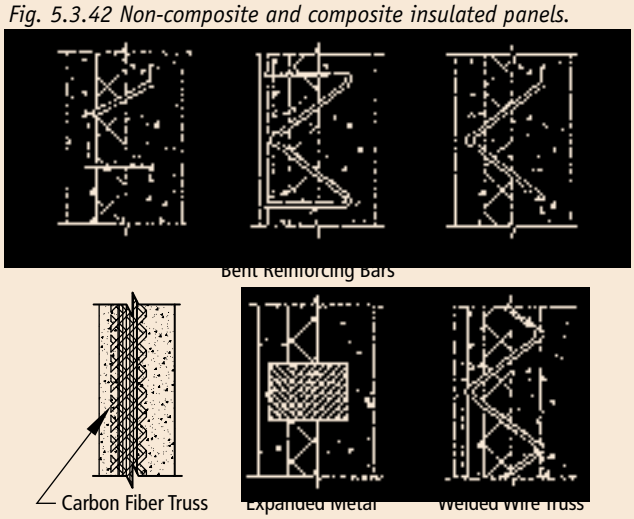

Shear connectors are used to transfer (in-plane) shear forces between the two wythes. Because sandwich wall panels are usually designed as one-way structural elements, shear forces are generated due to longitudinal bending in the panels. In some cases, the shear connectors may be used to transfer the weight of a non-structural wythe to the structural wythe. Some shear connectors are intentionally stiff in one direction and flexible in the other. These are called one-way shear connectors. Examples of these are longitudinal steel wire trusses, M-ties, flat sleeve anchors, and small diameter bent bars. Some one-way shear connectors are shown in Fig. 5.3.42.

Tension connectors resist tension only and are not capable of transferring in-plane shear forces between the wythes. They are used in non-composite panels to

Fig. 5.3.43 Tension/compression ties.

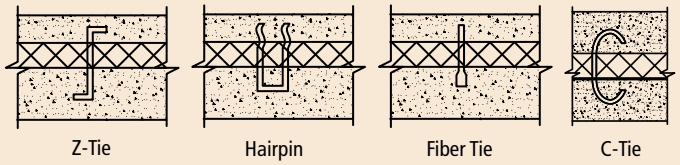

transfer normal forces between wythes and in composite panels as auxiliary connectors when the spacing of shear connectors is large. Because these connectors are unable to transfer shear, their contribution to composite action is usually neglected. Examples of tension connectors are plastic pins, metal C-ties, hairpins, and z-ties. These connectors are shown in Fig. 5.3.43.

Wire tie connectors are usually 12 to 14 gauge, and preferably of stainless steel, Type 304 or 316. Galvanized metal or plastic ties may also be acceptable. Ties of welded wire fabric and reinforcing bars are sometimes used. Ties should be arranged or coated so that galvanic reaction between the tie and reinforcement will not occur. In buildings with high relative humidities, over 60%, it may be desirable to use plastic ties to avoid condensation at the tie locations. Plastic ties will maintain the rated R-value of the insulation and reduce heat flow through the wall. Consideration may have to be given to the effect of the plastic tie on the fire resistance of the wall.

General Architectural Design Considerations for precast concrete sandwich panels are similar to the design of single wythe architectural precast concrete panels. However, there are some special considerations for precast concrete sandwich wall panels.

Bowing in sandwich panels is a deflection caused by differential wythe shrinkage, eccentric prestress, thermal gradients through the panel thickness, differential modulus of elasticity between the wythes and creep from storage of the panels in a deflected position. These actions cause one wythe to lengthen or shorten relative to the other. When wythes are interconnected, such differential wythe movement may result in curvature of the panel, i.e., bowing. Because most sandwich panels exhibit some degree of composite interaction (due to shear transfer by either bonded insulation and/or by the stiffness of wythe connectors), bowing in all types of sandwich panels is common.

Some useful observations made by those experienced with composite sandwich panels are:

- Panels bow outwards most of the time.
- Panels heated by the afternoon sun will bow more than those that are not, i.e., panels on the south and west elevations will bow more than those on the east and north elevations.
- Panels bow daily due to transient thermal gradients.
- Sandwich panels experience a greater thermal gradient than solid panels of equal thickness. This is due to the superior thermal properties of sandwich panels.
- Panels stored in a bowed position will tend to remain in the bowed position after erection. This may be due to "locked-in" creep.
- Differential shrinkage can occur between the wythes due to relative humidity differences between interior and exterior exposures.
- Panels containing wythes with different moduli of elasticity, such as panels with wythes containing different concrete strengths but with equal levels of prestress, will bow due to differential shortening and creep of the wythes after prestress transfer.

In order to maintain integrity of caulking, connections should be detailed so that adjacent panels move together perpendicular to their plane. The connections should also be detailed so that volume change forces do not build up parallel to the plane of the panels.

It is important that the designer realize that any calculation of anticipated sandwich panel bowing is approximate. The exact amount of actual bowing cannot be determined by calculation. It is essential that all parties understand there will be bowing, that experience with similarly configured panels is the best method of predicting the magnitude of bow, and that the panel connections be detailed accordingly.

For panels with large openings, joints in the outer wythes at the corners of such opening are desirable. These joints should preferably be completely through to the insulation layer and may subsequently be sealed or treated architecturally, in the same manner as the joints between panels.

Control joints may be required in large non-composite panels to break the outer wythe into units which will not craze or crack due to extreme temperature changes, or shrinkage and creep of the concrete. The pattern for such control joints becomes an important architectural feature and aligning such joints with adjacent panels must be done carefully. These can be minimized by having the real panel joint expressed as a recess, but this may not be possible if the outer wythe is already of minimum thickness. Alternatively, the pattern may be varied and only maintained in alternate panels, so that a small misalignment will not be noticeable. The potential for crazing or cracking and the need for control joints in the outer wythe can be reduced by prestressing the panels.

Fig. 5.3.44 Corner variations of sandwich panels.

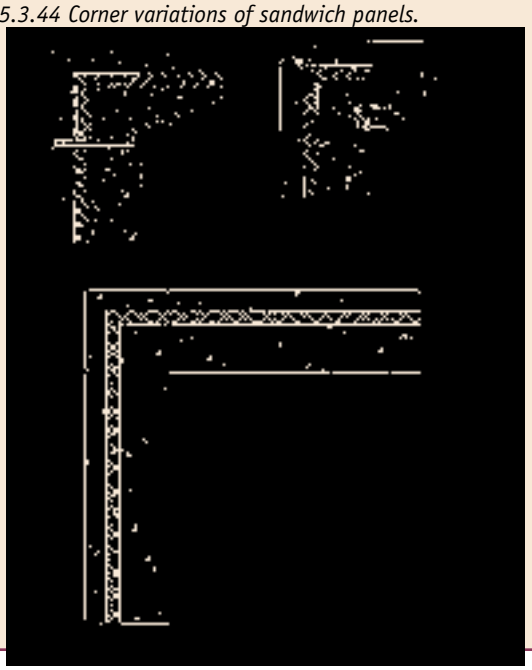

At corners, the bowing of panels perpendicular to each other may cause unacceptable separation and possible damage to the joint sealant. It may be desirable to restrain bowing at the corners with one or more connections between panels or to a corner column. Good corner details are essential and should be carefully detailed, Fig. 5.3.44. Mitered corners should have a quirk detail and be restrained with the panels adequately prestressed or reinforced to resist the restraint forces. The panel-to-panel connections should be detailed to minimize significant in-plane volume change restraint forces. Corner panels are not easy to weatherseal even with returns as the bowing will be in different planes. In addition, the panel with even a small return will be stiffer than its neighbor, and both joints on either side of a corner may suffer. A separate corner unit, which is not necessarily flush with the adjacent panels, can be effectively used to camouflage bowing in the two different planes.

If other materials are incorporated in a wall with precast concrete sandwich wall panels, no attempt should be made to make this interfacing material flush with the concrete surface, as it is unlikely that this material will act and bow exactly like the concrete panels. Anything connected or adjacent to the sandwich panels must be able to accommodate bowing movement. If it is essential that the panels are in the same theoretical plane, it is suggested that they be framed around with material which is not flush with the walls, similar to suggestions for corner columns. A door or window frame can be attached to the inside wythe because most of the bowing movement is confined to the exterior wythe.

Window frames should have thermal breaks between the exterior frame and the interior frame. Although extruded aluminum window frames are more commonly used in precast concrete cladding, other framing materials such as aluminum-clad wood, vinyl, fiberglass, or aluminum with a thermal break, will experience less heat loss through the frame. A substantial part of the total heat loss through a window can occur through its frame. Care must also be taken to avoid placing moisture sensitive materials in contact with concrete.

5.4 SUSTAINABILITY

5.4.1 Glossary

Admixture: material, other than water, aggregate, and hydraulic cement, used as an ingredient of concrete, mortar, grout, or plaster and added to the batch immediately before or during mixing. Chemical admixtures are most commonly used for freeze-thaw protection, to retard or accelerate the concrete setting time, or to allow less water to be used in the concrete.

Albedo: solar reflectance; see reflectance.

Building envelope: the components of a building that perform as a system to separate conditioned space from unconditioned space.

Calcination: process of heating a source of calcium carbonate, such as limestone, to high temperatures, thereby causing a chemical reaction that releases CO_2. This CO_2 is not related to the fuel used to heat the calcium carbonate.

Cement: *see portland cement.*

Cementitious material (cementing material): any material having cementing properties or contributing to the formation of hydrated calcium silicate compounds. When proportioning concrete, the following are considered cementitious materials: portland cement, blended hydraulic cement, fly ash, ground granulated blast-furnace slag, silica fume, calcined clay, metakaolin, calcined shale, and rice husk ash.

Concrete: mixture of binding materials and coarse and fine aggregates. Portland cement and water are com-

monly used as the binding medium for normal concrete mixtures, but may also contain pozzolans, slag, and/or chemical admixtures.

Emittance: the ability of the material to emit, or "let go of" heat.

Green buildings: buildings designed considering the concepts of sustainable design and reduction of environmental impacts due to site selection, water use, enegy use, materials and resources, the building's impact on the environment, and indoor air quality.

Greenhouse gas emissions: emissions that have the potential to increase air temperatures at the earth's surface, including carbon dioxide, methane, nitrous oxide, CFCs, water vapor, and aerosols (particles of 0.001 to 10μm diameter).

Portland cement: Calcium silicate hydraulic cement produced by pulverizing portland-cement clinker, and usually containing calcium sulfate and other compounds.

Pozzolan: siliceous or siliceous and aluminous materials, like fly ash or silica fume, which in itself possess little or no cementitious value but which will, in finely divided form and in the presence of moisture, chemically react in the presence of portland cement to form compounds possessing cementitious properties.

Reflectance: the ratio of the amount of light or solar energy reflected from a material surface to the amount shining on the surface. Solar reflectance includes light in the visible and ultraviolet range. For artificial lighting, the reflectance refers to the particular type of lighting used in the visible spectrum.

Silica fume: very fine noncrystalline silica which is a byproduct from the production of silicon and ferrosilicon alloys in an electric arc furnace; used as a pozzolan in concrete.

Slag cement (Ground granulated blast-furnace slag): a nonmetallic hydraulic cement consisting essentially of silicates and aluminosilicates of calcium developed in a molten condition simultaneously with iron in a blast furnace. Slag cement can be used as a partial replacement or addition to portland cement in concrete.

Supplementary cementitious materials: materials that when used in conjunction with portland cement contribute to the properties of hardened concrete through hydraulic or pozzolanic activity or both.

Sustainability: development that meets the needs of the present without compromising the ability of future generations to meet their own needs.[19] In more tangible terms, sustainability refers to the following: not compromising future quality of life; remediating environmental damage done in the past; and recognizing that our economy, environment, and social well-being are interdependent.

Sustainability rating systems: a set of criteria used to certify that a construction, usually a building, is sustainable, green, or energy-conserving.

Thermal mass: the storage properties of concrete and masonry that result in a reduction and shift in peak energy load for many buildings in many climates, compared to wood or metal frame structures.

Urban heat island: microclimates near urban or suburban areas that are warmer than surrounding areas due to the replacement of vegetation with buildings and pavements.

5.4.2 Sustainability Concepts

Sustainability is often defined as development that meets the needs of the present without compromising the ability of future generations to meet their own needs. Worldwide, people are currently using 20% more resources than can be regenerated. In particular, the U.S. population consumes more resources on a per capita basis than any other nation.

The environmental impact of constructing and operating buildings in most countries is significant. Consider that buildings consume 65% of the electricity generated in the U.S. and more than 36% of the primary energy (such as natural gas); produce 30% of the national output of greenhouse gas emissions; use 12% of the potable water in the U.S.; and employ 40% of raw materials (3 billion tons annually) for construction and operation worldwide.[20]

Building materials can have a significant effect on the environmental impact of the construction and operation of a building. Some materials may have to be used in special configurations, or employ different combinations, to achieve sustainability; the inherent properties of precast concrete, however, make it a natural choice for achieving sustainability in buildings. Precast concrete

19 World Commision on Environment and Development, "Report on Our Common Future," Oxford University Press, New York, NY, 1987.

20 U.S. Green Building Council, "An Introduction to the U.S. Green Building Council and the LEED Green Building Rating System," PowerPoint presentation on the USGBC website, October 2005, www.usgbc.org.

contributes to sustainable practices by incorporating integrated design, using materials efficiently, and reducing construction waste, site disturbance, and noise.

Although most consumers are concerned with the present and future health of the natural environment, few are willing to pay more for a building, product, process, or innovation that minimizes environmental burdens. The concept of sustainability, however, balances sustainable design with cost-effectiveness. Using integrated design (also called holistic or whole building approach), a building's materials, systems, and design are examined from the perspective of all project team members and tenants. Energy efficiency, cost, durability (or service life), space flexibility, environmental impact, and quality of life are all considered when decisions are made regarding the selection of a building design.

5.4.2.1 Triple bottom line

The triple bottom line — environment, society, and economy — emphasizes that economic consequences are related to environmental and social consequences. Consequences to society include impacts on employees, communities, and developing countries, as well as ethics, population growth, and security. Reducing material, energy, and emissions used by buildings has impacts far beyond those of the buildings themselves, such as:

- Using less materials means fewer new quarries are needed.
- Using less energy means fewer new power plants need to be constructed, less pollution is emitted into the air, and dependence on foreign energy sources is reduced.
- Less emissions to air means a reduction in respiratory conditions, such as asthma.
- Using less water means a reduction in demands on the infrastructure to find and deliver new sources of water.

All of these examples indicate how building energy and utility use affect the local community. These are especially important since most communities do not want new power plants, quarries, or landfills built near them.

The community can also be considered globally. Carbon dioxide (CO_2) emissions in the U.S. were reduced in 2002 for the first time; this reduction, however, was due to a decrease in manufacturing and a stagnant economy. That same year, China's production of CO_2 increased by more than the reduction realized in the U.S., but this increase was primarily due to production of materials consumed by U. S. citizens. Energy and material consumption, waste, and emissions to air, land, and water need to be considered from a global as well as regional perspective in a global market.

5.4.2.2 Cost of building green

A sustainable design can result in reduced project costs and a building that is energy and resource efficient. Energy and water efficient buildings have lower operating costs (in the range of $0.60 to $1.50 versus $1.80 per sq ft) and a higher facility value than conventional buildings.[21] Lower energy costs translate into smaller capacity requirements for mechanical equipment (heating and cooling) and lower first costs for such equipment. Effective use of daylighting and passive solar techniques can further reduce lighting, heating and cooling costs. Reusing materials, such as demolished concrete for base or fill material, can reduce costs associated with hauling and disposing of materials.

When sustainability is an objective at the outset of the design process, the cost of a sustainable building is competitive. Often green buildings cost no more than conventional buildings because of the resource-efficient strategies used, such as downsizing of more costly mechanical, electrical, and structural systems. Reported increases in first costs for green buildings range from 0 to 2% or more, with costs expected to decrease as project teams become more experienced with green building strategies and design.[22] Generally, a 2% increase in construction costs will result in a savings of 10 times the initial investment in operating costs for utilities (energy, water, and waste) in the first 20 years of the building's life.

Buildings with good daylighting and indoor air quality — both common features of sustainable buildings — have increased labor productivity, worker retention, and days worked. These benefits contribute directly to a company's profits because salaries — which are about ten times higher than rent, utilities, and maintenance combined — are the largest expense for most

21 U.S. Green Building Council, "An Introduction to the U.S. Green Building Council and the LEED Green Building Rating System," PowerPoint presentation on the USGBC website, October 2005, www.usgbc.org.

22 *Green Value, Green Buildings Growing Assets,* www.rics.org/greenvalue.

Table 5.4.1 Integration Strategies.

INTEGRATION STRATEGY	SUSTAINABILITY ATTRIBUTE
Use precast concrete panel as interior surface.	Saves material; no need for additional framing and drywall.
Use hollow-core panels as ducts.	Saves material and energy; eliminates ductwork and charges thermal mass of panel.
Use thermal mass in combination with appropriate insulation levels in walls.	Thermal mass with insulation provides energy benefits that exceed the benefits of mass or insulation alone in most climates.
Design wall panels to be disassembled for when building function changes.	Saves material; extends service life of panels.
Use durable materials.	Materials with a long life cycle and low maintenance will require less replacement and maintenance during the life of the building.
Use natural resources such as daylight as a source for building lighting, trees for shading, and natural ventilation	Reduces lighting and cooling energy use. Increases indoor air quality and employee productivity.
Reduce and recycle construction waste.	Reduces transportation and disposal costs of wastes. Less virgin materials are used if construction waste is recycled for another project.
Use building commissioning quality control, and inspections to ensure that building standards are met.	Energy savings and indoor air quality are most likely attained during the building life if inspections are made to ensure construction was completed as designed.

companies occupying office space.[23] In schools with good daylighting and indoor air quality, students have higher test scores and lower absenteeism.

5.4.2.3 Holistic/integrated design

A key tenet of sustainable design is the holistic or integrated design approach. This approach requires coordinating the architectural, structural, and mechanical designs early in the schematic design phases to discern possible system interactions, and then deciding which beneficial interactions are essential for project success. For example, a well-insulated building with few windows that face east and west will require less heating and air-conditioning. This could impact the mechanical design by requiring fewer ducts and registers and perhaps allow for the elimination of registers along the building perimeter. Precast concrete walls act as thermal storage to delay and reduce peak loads, while also positively affecting the structural design of the building. Table 5.4.1 provides other integrated design strategies.

23 U.S. Green Building Council, "Making the Business Case for High Performance Green Buildings," www.usgbc.org.

A holistic viewpoint will also take into account the surrounding site environment:

- Are shelters needed for people who take public transportation to work?
- Can bike paths be incorporated for those who bike to work?
- Can native landscaping be used to reduce the need for irrigation?

The eight elements of integrated design are:

1. Emphasize the integrated process.
2. Consider the building as a whole — often interactive, often multi-functional.
3. Focus on the life cycle.
4. Have disciplines work together as a team from the start.
5. Conduct relevant assessments to help determine requirements and set goals.
6. Develop tailored solutions that yield multiple benefits while meeting requirements and goals.
7. Evaluate solutions.
8. Ensure requirements and goals are met.

Contracts and requests for proposals (RFPs) should clearly describe sustainability requirements and project documentation required.[24]

5.4.2.4 3R's – reduce, reuse, recycle

The 3R's of reducing waste can be applied to the building industry.

Reduce the amount of material used and the toxicity of waste materials. Precast concrete can be designed to optimize (or lessen) the amount of concrete used. Industrial wastes such as fly ash, slag cement, and silica fume can be used as partial replacements for cement with certain aesthetic (color) and stripping time restrictions. Thereby reducing the amount of cement used in concrete. Precast concrete generates a low amount of waste with a low toxicity. It is generally assumed that 2% of the concrete at the plant is waste, but because it is generated at the plant, 95% of the waste is used beneficially.

Reuse products and containers; repair what can be reused. Precast concrete panels can be reused when buildings are expanded. Concrete pieces from demolished structures can be reused to protect shorelines. Since the precast process is self-contained, formwork and finishing materials are reused. Wood forms can generally be used 25 to 30 times without major maintenance while fiberglass, concrete and steel forms have significantly longer service lives.

Recycle as much as possible, which includes buying products with recycled content. Concrete in most urban areas is recycled as fill or road base. Wood and steel forms are recycled when they become worn or obsolete. Virtually all reinforcing steel is made from recycled steel. Many cement plants burn waste-derived fuels such as spent solvents, used oils, and tires in the manufacture of cement.

5.4.3 Life Cycle

A life cycle analysis can be done in terms of the economic life cycle cost or environmental life cycle impact. Although the two approaches are different, they each consider the impacts of the building design over the life of the building — an essential part of sustainable design. When the energy and resource impacts of sustainable design are considered over the life of the building, a sustainable design often becomes more cost-effective. Conversely, when the energy consuming impacts of a low first cost design are considered over the life of the building, the building may not be an attractive investment.

Practitioners of sustainable design believe that the key to sustainable building lies in long-life, adaptable, low-energy buildings. The durability and longevity of precast concrete makes it an ideal choice.

5.4.3.1 Life cycle cost and service life

A life cycle cost analysis is a powerful tool used to make economic decisions for selection of building materials and systems. This analysis is the practice of accounting for all expenditures incurred over the lifetime of a particular structure. Costs at any given time are discounted back to a fixed date, based on assumed rates of inflation and the time-value of money. A life cycle cost is in terms of dollars and is equal to the construction cost plus the present value of future utility, maintenance, and replacement costs over the life of the building.

Using this widely accepted method, it is possible to compare the economics of different building alternatives that may have different cash flow factors but that provide a similar standard of service. The result is financial information for decision making, which can be used to balance capital costs and future operation, repair or maintenance costs. Quite often building designs with the lowest first costs for new construction will require higher costs during the building life. So, even with their low first cost, these buildings may have a higher life cycle cost. Conversely, durable materials, such as precast concrete, often have a lower life cycle cost. In the world of selecting the lowest bid, owners need to be made aware of the benefits of a lower life cycle cost so that specifications require durable building materials such as precast concrete.

The Building Life-Cycle Cost software from the National Institute of Standards and Technology (NIST) provides economic analysis of capital investments, energy, and operating costs of buildings, systems, and components. The software includes the means to evaluate costs and benefits of energy conservation and complies with ASTM standards related to building economics and Federal Energy Management Program requirements.

Accepted methods of performing life cycle cost anal-

24 Portland Cement Association, website for sustainable solutions using concrete, www.concretethinker.com

Fig. 5.4.1 The four phases in the process of developing an LCA.

yses of buildings assume a 20-year life with the building maintaining 80% of its residual value at the end of this time period. Buildings actually last hundreds of years if they are not torn down due to obsolescence. Sustainability practitioners advocate the foundation and shell of new buildings be designed for a service life of 200 to 300 years. Allowing extra capacity in the columns and floors for extra floors and floor loads and extra capacity in roofs for roof-top gardens adds to the building's long term flexibility.

On the other end of the spectrum, real estate speculators plan for a return on investment in 7 years and generally do not buy into the life cycle cost approach. Similarly minimum code requirements for energy conserving measures in the building shell are generally for 5 years, meaning initial insulation levels pay for themselves in 5 years. Since it is difficult and costly to add more insulation to the building shell after it has been constructed, the 5-year payback for insulation is not consistent with the life cycle cost associated with 100 year use of buildings.

Advanced building design guidelines from the New Buildings Institute (www.NewBuildings.org), American Society for Heating, Refrigerating, and Air-Conditioning Engineers (ASHRAE) (www.ASHRAE.org), and others specify insulation levels for those who want to build cost effective buildings above minimum code levels. Alternatively, thermal mass and insulation can be included in the life cycle cost analysis to determine cost-effective levels. However, this requires whole building energy analyses to determine annual costs to heat and cool the building. Economic levels of insulation depend on the climate, location, and building type.

5.4.3.2 Environmental life cycle inventory and life cycle assessment

A life cycle assessment (LCA) is an environmental assessment of the life cycle of a product. An LCA looks at all aspects of a product life cycle — from the first stages of harvesting and extracting raw materials from nature, to transforming and processing these raw materials into a product to, using the product and ultimately recycling it or disposing of it back into nature. An LCA consists of the four phases shown in Fig. 5.4.1.

The LCA of a building is necessary to evaluate the full environmental impact of a building over its life. Green buildings rating systems, models such as BEES (www.bfrl.nist.gov/oae/software/bees.html), and programs that focus only on recycled content or renewable resources provide only a partial snapshot of the environmental impact a building can leave. An LCA of a building includes environmental effects due to:

- Extraction of materials and fuel used for energy.
- Manufacture of building components.
- Transportation of materials and components.
- Assembly and construction.
- Operation including energy consumption, maintenance, repair, and renovations.
- Demolition, disposal, recycling, and reuse of the building at the end of its functional or useful life.

A full set of effects includes land use, resource use, climate change, health effects, acidification, and toxicity.

An LCA involves a time consuming manipulation of large quantities of data. A model such as SimaPro (www.pre.nl/g) provides data for common building materials and options for selecting LCA impacts. The Portland Cement Association (PCA) (www.concrete.org) publishes reports with life cycle inventory (LCI) data on cement and concrete. All models require a separate analysis of annual heating, cooling and other occupant loads using a program such as DOE-2 (http://simulationresearchLBL.gov) or Energy Plus (www.EnergyPlus.gov).

An LCI is the first stage of an LCA. An LCI accounts for all the individual environmental flows to and from a product throughout its life cycle. It consists of the materials and energy needed to make and use a product and the emissions to air, land, and water associated with making and using that product.

Several organizations have proposed how an LCA should be conducted. Organizations such as the International Organization for Standardization (ISO) (www.ISO.org), the Society of Environmental Toxicology and Chemistry (SETAC), (www.SETAC.org), and the United States Environmental Protection Agency (US EPA), (www.EPA.gov), have documented standard pro-

Fig. 5.4.2 Precast concrete system boundary.

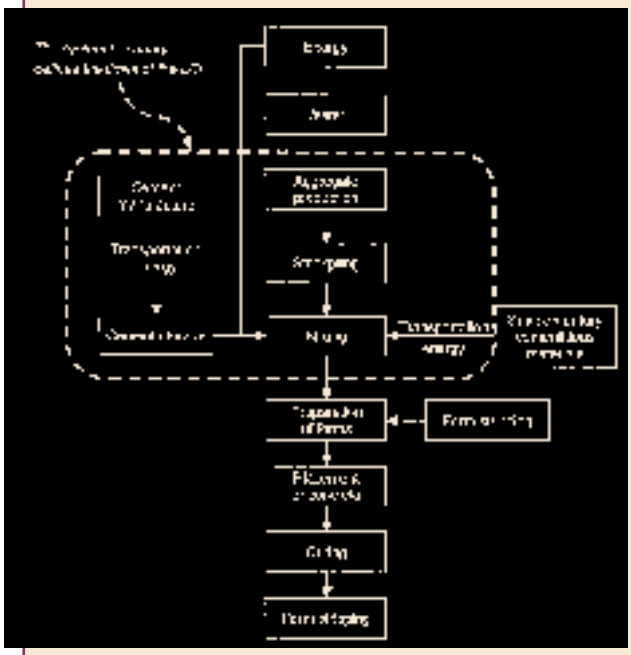

cedures for conducting an LCA. These procedures are generally consistent with each other: they are all scientific, transparent, and repeatable.

LCI Boundary. The usefulness of an LCA or LCI depends on where the boundaries of a product are drawn. A common approach is to consider all the environmental flows from cradle-to-cradle. For example, the system boundary in Fig. 5.4.2 shows the most significant processes for precast concrete operations. It includes most of the inputs and outputs associated with producing concrete — from extracting raw material to producing mixed concrete ready for placement in forms. The system boundary also includes the upstream profile of manufacturing cement, as well as quarrying and processing aggregates, and transporting cement, fly ash, and aggregates to the concrete plant. Energy and emissions associated with transporting the primary materials from their source to the concrete plant are also included in the boundary. It does not include, however, upstream profiles of fuel, electricity, water, or supplementary cementitious materials. This LCI also does not include form preparation, placing the concrete in the formwork, curing, and stripping. A complete precast concrete LCI would include all these steps.

An upstream profile can be thought of as a separate LCI that is itself an ingredient to a product. For example, the upstream profile of cement is essentially an LCI of cement, which can be imported into an LCI of concrete. The LCI of concrete itself can then be imported into an LCI of a product, such as an office building.

To get the most useful information out of an LCI, precast concrete should be considered in context of its end-use. For example, in a building, the environmental impact of the building materials is usually dwarfed by the environmental effects associated with building operations such as heating, ventilating, cooling, and lighting.

The LCI of materials generally do not consider embodied energy and emissions associated with construction of manufacturing plant equipment and buildings, nor the heating and cooling of such buildings. This is generally acceptable if their materials, embodied energy and associated emissions account for less than 1% of those in the process being studied. For example, the SETAC guidelines indicate that inputs to a process do not need to be included in an LCI if (i) they are less than 1% of the total mass of the processed materials or product, (ii) they do not contribute significantly to a toxic emission, and (iii) they do not have a significant associated energy consumption.

5.4.3.3 Concrete and concrete products LCI

The data gathered in an LCI is voluminous by nature and does not lend itself well to concise summaries; that is the function of the LCA. The data in typical LCI reports are often grouped into three broad categories: materials, energy, and emissions. These LCI data do not include the upstream profiles of *supplementary cementitious materials* (such as fly ash, silica fume, etc.) or energy sources (such as fuel and electricity).

Raw Materials. Approximately 1.6 lb (0.73kg) of raw materials, excluding water, are required to make 1 lb (0.45kg) of cement.[25,26] This is primarily due to the *calcination* of limestone. In addition to the mixture water, the LCI assumes that precast concrete consumes 17.5 gallon/yd^3 (85 l/m^3) of water for washout of the mixer and equipment used to transfer concrete to molds.

25 Marceau, M.L., Nisbet, M.A., and VanGeem, M.G., "Life Cycle Inventory of Portland Cement Manufacture," PCA R&D Serial No. 2095b, Portland Cement Association, Skokie, Illinois, 2005. www.cement.org

26 Nisbet, M.A., Marceau, M.L., and VanGeem, M.G., "Environmental Life Cycle Inventory of Portland Cement Concrete," PCA R&D Serial No. 2095a, Portland Cement Association, Skokie, Illinois, 2002.

Solid waste from precast concrete plants is insignificant. Waste is about 2.5% of the mass of concrete used in production. About 95% of this waste is further beneficially reused through crushing and recycling, resulting in about 0.2 pcf (3 kg/m^3) (about 0.1%) of actual waste.

Fuel and Energy. The amount of energy required to manufacture or produce a product can be shown in units of energy, such as joules or Btu's, or as amounts of fuel or electricity. Embodied energy per unit volume of concrete is primarily a function of the cement content of the mixture. For example, cement manufacturing accounts for about 80% of total energy in a 5,000 psi (35MPa) concrete mixture. Energy used in operations at the concrete plant contributes close to 10%, while aggregate processing and transportation each contribute about 5%.

The embodied energy of a concrete mixture increases in direct proportion to its cement content. Therefore, the embodied energy of concrete is sensitive to the cement content of the mixture and to the assumptions about LCI energy data in cement manufacturing.

Replacing cement with supplementary cementitious materials, such as slag cement or silica fume, has the effect of lowering the embodied energy of the concrete. Fly ash, slag cement, and silica fume do not contribute to the energy and emissions embodied in the concrete (except for the small energy contributions due to slag granulation/grinding, which is included).[27] These products are recovered materials from industrial processes (also called post-industrial recycled materials) and if not used in concrete would use up valuable landfill space. With a 50% slag cement replacement for portland cement in a 5,000 psi (35 MPa) mixture, embodied energy changes from 2.3 to 1.5 GJ/m^3 (1.7 to 1.1 MBtu/yd^3), a 34% reduction. Fly ash or slag cement replacement of portland cement can also significantly reduce embodied emissions. For instance, a 45% carbon dioxide emissions reduction is achievable with 50% substitution of slag for portland cement in a 7,500 psi (50 MPa) precast concrete mixture. Certain aesthetic (color) and stripping time restrictions apply when using supplementary cementitious materials.

Embodied energy of reinforcing steel used in concrete is relatively small because it represents only about 1% of the weight in a unit of concrete and it is manufactured mostly from recycled scrap metal. Reinforcing steel has over 90% recycled content according to the Concrete Reinforcing Steel Institute (www.crsi.org) The process for manufacturing reinforcing bars from recycled steel uses significant energy and should be considered if the reinforcing bar content is more than 1% of the weight of the concrete.

It is assumed that at a typical site and in a precast concrete plant, concrete production formwork is reused a number of times through the repetitious nature of work, so its contribution to an LCI or LCA is negligible. Steel and wood formwork is generally recycled at the end of its useful life.

When looking at a complicated product, such as an office building, the categories of fuel and energy are considered. However, depending on the life span of the building, the magnitude of energy use due to operations can be quite large. Building energy-use, including heating, cooling, ventilating, and lighting, is generally 90 to 95% of life cycle energy-use. This means that the office building life cycle energy is not sensitive to variations in cement manufacturing, concrete production, or transportation. The embodied energy of the material comprising a building is relatively minor compared to the building life cycle energy usage. The building life cycle energy is primarily a function of climate and building type, not concrete content.

Emissions to Air. The greatest amount of particulate matter (dust) comes from cement manufacturing and aggregate production. The single largest contributor to particulate emissions in both cement manufacturing and aggregate production is quarry operations (quarry operations include blasting, haul roads, unloading, and stockpiling). In cement manufacture, quarry operations account for approximately 60% of total particulate emissions. In aggregate production, quarry operations are responsible for approximately 90% of particulate emissions. Approximately 30% of the particulate emissions associated with concrete production are from aggregate production and approximately 60% are embodied in the cement. However, particulate emissions from quarries are highly variable and sensitive to how dust is managed on haul roads and in other quarry operations.

The amounts of carbon dioxide (CO_2) and other combustion gases associated with concrete production are primarily a function of the cement content in the

27 Marceau, M.L., Gajda, J., and VanGeem, M.G., "Use of Fly Ash in Concrete: Normal and High Volume Ranges," PCA R&D Serial No. 2604, Portland Cement Association, Skokie, Illinos, 2002.

Table 5.4.2 Some Impact Categories for Performing a Life Cycle Assessment.

Bulk waste	Global warming potential	Production capacity of drinking water
Carcinogens	Hazardous waste	Production capacity of irrigation water
Climate change	Human toxicity, air	Radiation
Crop growth capacity	Human toxicity, soil	Radioactive waste
Depletion of reserves	Human toxicity, water	Respiratory inorganics
Ecotoxicity soil, chronic	Land use	Respiratory organics
Ecotoxicity water, acute	Life expectancy	Severe morbidity and suffering
Ecotoxicity water, chronic	Morbidity	Severe nuisance
Eutrophication	Nuisance	Soil acidification
Fish and meat production	Ozone depletion	Species extinction
Fossil fuels	Photochemical smog	Wood growth capacity

mixture designs. Emissions of CO_2 increase in approximately a one-to-one ratio with the cement content of concrete. That is, for every additional pound of cement per cu yd of concrete, there will be an increase in CO_2 emissions by approximately 1 lb (0.45kg). Because of the CO_2 emissions from calcination and from fuel combustion in cement manufacture, the cement content of the concrete mixture accounts for about 90% of the CO_2 emissions associated with concrete production. Thus, concrete LCI results are significantly influenced by the cement content of the concrete mixture and the basis of the CO_2 data in the cement LCI.

The fact that cement manufacturing accounts for approximately 70% of fuel consumption per unit volume of concrete indicates that the amounts of combustion gases, sulfur dioxide (SO_2), and nitrous oxides (NO_x), are sensitive to cement content of the mixture.

Cement kiln dust is a waste product of the cement manufacturing process and can be used to help maintain soil fertility. An industry-weighted average of 94 lb of cement kiln dust is generated per ton (39 kg per metric tonne) of cement. Of this about 75 lb (31 kg) are land-filled and about 19 lb (8 kg) are recycled in other operations.

Most emissions to air from the life cycle of an office building come from the use of heating and cooling equipment, not from the cement or concrete.

5.4.3.4 Life cycle impact assessment

In the next phase of analysis, the LCI data is assigned to impact categories and the relative effect of the inventory data within each impact category is weighted. Among LCA practitioners, this phase is called life cycle impact assessment, and it consists of category definition, classification, and characterization. Category definition consists of identifying which impact categories are relevant to the product being studied. Classification consists of grouping related substances into impact categories. For example, the gases carbon dioxide (CO_2), methane (CH_4), and nitrous oxide (N_2O) contribute to climate change; therefore, they can be grouped together in an impact category called climate change. There are many impact categories to choose from. The categories chosen depend on the goal and scope of the LCA. Table 5.4.2 lists some possible impact categories.

According to ISO 14041, the only mandatory step in life cycle impact assessment is characterization. In characterization, weighting factors are assigned according to a substance's relative contribution to the impact category. In terms of global warming potential, one pound of CH_4 is 20 times more potent than one pound of CO_2, and one pound of N_2O is 320 times more potent than one pound of CO_2. Therefore, in assessing the potential for global warming, CO_2 is assigned a weighting factor of 1, CH_4 a factor of 20, and N_2O a factor of 320. It is important to consider that there is

no scientific basis for comparing *across* impact categories. For example, global warming potential cannot be compared with potential ozone depletion.

The methodology for life cycle impact assessment is still being developed, and there is no general and widespread practice at this time or an agreement on specific methodologies. As a result, it is common to use several of the available methods to perform the life cycle impact assessment.

Table 5.4.3 – LEED Project Checklist: Precast Concrete Potential Points.*

LEED CATEGORY	CREDIT OR PREREQUISITE	POINTS AVAILABLE
Sustainable Sites	Credit 5.1: Site Development, Protect or Restore Habitat	1
Sustainable Sites	Credit 5.2: Site Development, Maximize Open Space	1
Sustainable Sites	Credit 7.1: Heat Island Effect, Non-Roof	1
Energy and Atmosphere	Prerequisite 2: Minimum Energy Performance	—
Energy and Atmosphere	Credit 1: Optimize Energy Performance	1-10
Materials and Resources	Credit 1.1: Building Reuse, Maintain 75% of Existing Shell	1
Materials and Resources	Credit 1.2: Building Reuse, Maintain 95% of Existing Shell	1
Materials and Resources	Credit 2.1: Construction Waste Management, divert 50% by weight or volume	1
Materials and Resources	Credit 2.2: Construction Waste Management, divert 75% by weight or volume	1
Materials and Resources	Credit 4.1: Recycled Content, the post-consumer recycled content plus one-half of the pre-consumer content constitutes at least 10% (based on cost) of the total value of the materials in the project	1
Materials and Resources	Credit 4.2: Recycled Content, the post-consumer recycled content plus one-half of the pre-consumer content constitutes at least 20% (based on cost) of the total value of the materials in the project	1
Materials and Resources	Credit 5.1: Local/Regional Materials, Use a minimum of 10% (based on cost) of the total materials value	1
Materials and Resources	Credit 5.2: Local/Regional Materials, Use a minimum of 20% (based on cost) of the total materials value	1
Indoor Environmental Quality	Credit 3.1: Construction Indoor Air Quality Management Plan, During Construction	1
Innovation and Design Process	Credit 1.1: Use of high volume supplementary cementitious materials. Apply for other credits demonstrating exceptional performance	1†
Innovation and Design Process	Credits 1.2: Apply for other credits demonstrating exceptional performance	1†
Innovation and Design Process	Credits 1.3: Apply for other credits demonstrating exceptional performance	1†
Innovation and Design Process	Credits 1.4: Apply for other credits demonstrating exceptional performance	1†
Innovation and Design Process	Credit 2.l: LEED Accredited Professional	1
	PROJECT TOTALS	**23**

*LEED: Leadership in Energy and Environmental Design.

† Up to 4 additional points can be earned, must be submitted and approved (not included in total).

Note: Scoring System: Certified, 26-32 points; Silver, 33-38 points; Gold, 39-51 points; and Platinum, 52-69 points.

5.4.4 Green Building Rating Systems

LCI and LCA are valid methods of assessing sustainability, but they are a complex accounting of all materials, energy, emissions, and waste; and their impacts. Conversely, green building rating systems have gained popularity because they are comparatively easy to use and straightforward. Focus groups have shown that consumers are interested in furthering sustainability but are unable to define it. Labeling a green building with LEED, Energy Star or Green Globes certification sends the message the building is green without having to perform a complex LCI or LCA.

5.4.4.1 LEED

The Leadership in Energy and Environmental Design (LEED) green building rating system is a voluntary, consensus-based national standard for developing high-performance, sustainable buildings. LEED is both a *standard* for certification and a *design guide* for sustainable construction and operation. As a standard, it is predominantly performance-based, and as a design guide, it takes a whole-building approach that encourages a collaborative, integrated design and construction process. LEED is administered by the U.S. Green Building Council (USGBC, www.usgbc.org). LEED-NC[28] is a document that applies to new construction and major renovation projects and is intended for commercial, institutional, and high-rise residential new construction and major renovation.

Essentially, LEED is a point-based system that *provides a framework for assessing building performance meeting sustainability goals*. Points are awarded when a specific intent is met, and a building is LEED certified if it obtains at least 26 points out of a total availability of 69 points (LEED-NC). The points are grouped into five categories: (i) sustainable sites, (ii) water efficiency, (iii) energy and atmosphere, (iv) materials and resources, and (v) indoor environmental quality. The more points earned, the "greener" the building. Silver, gold, and platinum ratings are awarded for at least 33, 39, and 52 points, respectively.

Appropriate use of precast concrete can help a building earn up to 23 points; 26 are required for LEED certification. Using concrete can help meet minimum energy requirements, optimize energy performance, and increase the life of a building. The constituents of concrete can be recycled materials, and concrete itself can also be recycled. Concrete and its constituents are usually available locally. These attributes of concrete, recognized in the LEED rating system, can help lessen a building's negative impact on the natural environment. Points applicable to precast concrete are summarized in Table 5.4.3 and explained throughout this chapter. Points must be documented according to LEED procedures to be earned. The USGBC website contains a downloadable "letter template" that greatly simplifies the documentation requirements for LEED.

The buildings in the corporate campus for CH2M Hill in Englewood, CO are framed with a total precast concrete system, including precast concrete shearwalls, double tees, inverted tee beams and loadbearing exterior walls, Fig. 5.4.3. The buildings are some of the first total precast concrete office buildings LEED-certified.

The Arizona Departments of Administration and Environmental Quality (ADOA & ADEQ) project is a 500,000 sq. ft (46,450m^2), single contract project consisting of two architectural precast concrete clad office buildings and two precast/prestressed concrete parking structures, Fig. 5.4.4(a and b). The Arizona Department of Administration (ADOA) is an 185,000 sq. ft (17,187m^2), 4-story office building with an 800 space parking structure. The Arizona Department of Environmental Quality (ADEQ) is a 6-story, 300,000 sq ft (27,870m^2) office building with a 1,000 space parking structure. Both buildings are registered with the United States Green Building Council's LEED program.

The 27-story LEED Platinum certified existing office building in downtown Sacramento, CA, has precast concrete panels with punched openings, Fig. 5.4.5. The windows were pre-mounted, glazed, and caulked at the plant after casting. The precast concrete panels on the south and west sides of the building have integral sun shades with a 1 ft (3m) overhang. The building's sustainable features can be grouped into three general categories; air quality; energy conservation and management; and recycling and recycled products.

The project in Fig. 5.4.6 is a USGBC LEED registered mixed-use development featuring street level retail and residential condominiums. The structure's framing consists of 7 in. (175mm) and 12 in. (300mm) loadbearing walls which support double tees and flat slabs. The precast concrete walls have a combination of sandblasted and cast-in thin brick finishes. The façade of this one building has four distinct architectural styles to appear

28 "LEED for New Construction," Version 2.2, United States Green Building Council, October 2005, www.USGBC.org.

as four separate and unique buildings. Mechanical, electrical and plumbing (MEP) accessories, such as conduit boxes, and mechanical and electrical embeds and openings were cast integrally into the panels.

5.4.4.2 Energy Star

Energy Star (www.energystar.gov) is a government/industry partnership designed to help businesses and consumers protect the environment and save money through energy efficiency. Energy Star labeling is available for office equipment such as computers and monitors, appliances such as refrigerators, and residential and commercial buildings. Buildings that meet certain criteria and achieve a rating of 75 or better in the Energy Star program are eligible to apply for the Energy Star (see www.energystar.gov).

The rating consists of a score on a scale of 1 to 100.

All three total precast concrete buildings are LEED certified.

Fig. 5.4.3
CH2M Hill World Headquarters, Englewood, Colorado: Architect: Barber Architecture.

The score represents a benchmark energy performance. For example, buildings that score 75 or greater are among the United States' top 25%. In addition, buildings must maintain a healthy and productive indoor environment.

At the present time, five commercial-building types are eligible for the Energy Star certification: offices, K–12 schools, supermarket/grocery stores, hotel/motels, and acute care/children's hospitals. These building types are broken down further into a number of specific occupancies. For example, office buildings include general office, bank branch, courthouse, and financial center.

Demonstrating conformance is accomplished through a web-based software tool called Portfolio Manager (www.energystar.gov). The program hinges on the unbiased opinions of a professional engineer who must visit the building and verify that data entered about the building are correct.

Fig. 5.4.4.(a)
Arizona Department of Administration (ADOA), Phoenix, Arizona; Architect: Opus Architects and Engineers; Photos: Alex Stricker, Stricker LLC.

Fig. 5.4.4.(b)
Arizona Department of Environmental Quality (ADEQ), Phoenix, Arizona; Architect: Opus Architects and Engineers.

Through the Portfolio Manager, the engineer inputs the building location and energy consumption and describes its physical and operating characteristics. Operating characteristics include such things as average weekly occupancy hours, number of occupants, and number and types of equipment such as personal computers, refrigeration cases, cooking facilities, and laundry facilities. Energy consumption is based on all sources of energy used per month. In addition to energy performance, the engineer is responsible for demonstrating compliance with industry standards on thermal comfort, indoor air quality, and illumination.

The professional engineer assessing the building is expected to give an opinion about the capability of the building to provide acceptable thermal environmental conditions per ASHRAE Standard 55[29] and its capability to supply acceptable outdoor air per ASHRAE Standard 62[30] (see www.ashrae.org). The engineer is also expected to give an opinion about the capability of the building to provide minimum illumination levels per the Iluminance Selection Procedure in the *IESNA Lighting Handbook*[31] (see www.iesna.org).

Fig. 5.4.5
The Joe Serna Jr. California EPA Headquarters, Sacramento, California; Architect: A. C. Martin Partners.

Fig. 5.4.6 Bookends, Greenville, South Carolina; Architect: Johnston Design Group, LLC; Photo: Johnston Design Group, LLC.

In addition, Portfolio Manager has the capability to manage energy data, analyze trends in energy performance (to make budget and management decisions regarding investments in energy-related projects), verify building performance, and track the progress of building improvements.

5.4.4.3 Green Globes

Green Globes is an online, point-based green building rating system administered by the Green Building Initiative (www.thegbi.org). Many of the points are sim-

29 Amercian Society of Heating, Refrigerating, and Air-Conditioning Engineers, *ASHRAE Standard 55—Thermal Environmental Conditions for Human Occupancy,* Atlanta, GA, www.ASHRAE.org.

30 Amercian Society of Heating, Refrigerating, and Air-Conditioning Engineers, *ASHRAE Standard 62.1-2004—Ventilation for Acceptable Indoor Air Quality,* Atlanta, GA.

31 Illuminating Engineering Society of North America, *Illuminating Engineering Society of North America Lighting Handbook,* 9th edition. December 2000, New York, NY, www.IESNA.org.

ilar to those in LEED, though the point structure differs; Green Globes has 1000 total points compared with the 69 for LEED-NC. Certification for Green Globes is available at 35% achievement of the total applicable points compared with LEED at 38% (26 points). It is easier to obtain certification in Green Globes, however, because points that are not applicable to the building are subtracted from the total number of applicable points, so a higher percentage is obtained for those criteria that are met.

5.4.5 Durability

A key factor in building reuse is the durability of the original structure. Precast concrete panels provide a long service life due to their durable and low-maintenance concrete surfaces. A precast concrete shell can be left in place when the building interior is renovated. Annual maintenance should include inspection and, if necessary, repair of sealant material.

Modular and sandwich panel construction with concrete exterior and interior walls provide long-term durability inside and out. Precast concrete construction provides the opportunity to refurbish the building should the building use or function change, rather than tear it down and start anew. These characteristics of precast concrete make it sustainable in two ways: it avoids contributing solid waste to landfills and it reduces the depletion of natural resources and production of air and water pollution caused by new construction.

LEED Materials Credit 1 in Building Reuse. *The purpose of this credit is to leave the main portion of the building structure and shell in place when renovating, thereby conserving resources and reducing wastes and environmental effects of new construction. The building shell includes the exterior skin and framing but excludes window assemblies, interior partition walls, floor coverings, and ceiling systems. This credit should be obtainable when renovating buildings with a precast concrete façade, because concrete generally has a long life. This is worth 1 point if 75% of the existing building structure/shell is left in place and 2 points if 100% is left in place*

5.4.5.1 Corrosion resistance

The inherent alkalinity of concrete results in a system of concrete and reinforcing steel that does not corrode in most environments. The most common reason for surface spalling of concrete in buildings is corrosion of reinforcing steel due to inadequate concrete cover. Precast concrete offers increased resistance to this type of spalling because reinforcement and concrete are placed in a plant, with more quality control than cast-in-place construction. This reduces variations in concrete cover over reinforcing steel and reduces the likelihood of inadequate cover.

5.4.5.2 Inedible

Vermin and insects cannot destroy concrete because it is inedible. Some softer construction materials are inedible but still provide pathways for insects. Due to its hardness, vermin and insects will not bore through concrete.

5.4.6 Resistant to Natural Disasters

Concrete is resistant to wind, hurricanes, floods, and fire. Properly designed precast concrete is resistant to earthquakes and provides blast protection for occupants.

5.4.6.1 Fire resistance

Precast concrete offers noncombustible construction that helps contain a fire within boundaries. As a separation wall, precast concrete helps to prevent a fire from spreading throughout a building or jumping from building to building. During wild fires, precast concrete walls help provide protection to human life and the occupant's possessions. As an exterior wall, concrete that endures a fire can often be reused when the building is rebuilt.

The fire endurance of concrete can be determined based on its thickness and type of aggregate. Procedures for determining fire endurance of building materials are prescribed by ASTM E119. Concrete element fire endurance is generally controlled by heat transmission long before structural failure, whereas other construction materials fail by heat transmission when collapse is imminent. So, a 2-hour fire endurance for a precast concrete wall will most likely mean the wall gets hot (experiences an average temperature rise of 250 °F [140 °C] or 325°F [180°C] at any one point) whereas a 2-hour fire endurance of a frame wall means the wall is likely near collapse. Concrete helps contain a fire even if no water supply is available, whereas sprinklers rely on a problematic water source.

Details on determining fire resistance of precast concrete walls are provided in Section 5.6.

5.4.6.2 Tornado, hurricane, and wind resistance

Precast concrete can be economically designed to resistant to tornadoes, hurricanes, and wind. Hurricanes are prevalent in coastal regions. Tornadoes are particularly prevalent in the path of hurricanes and in the central plains of the U.S.

Case Study: In 1967, a series of deadly tornadoes hit northern Illinois. Damages at the time were estimated at $50 million, with 57 people were killed and 484 homes were destroyed. Two precast/prestressed concrete structures, a grocery store and a high school, were in the direct path of two of the tornadoes, which struck almost simultaneously. Repairs to the structural system of the grocery store (limited to a single crack in the flanges and stem of a beam subjected to uplift) were less than $200. In the high school, structural damage was limited to the flange of one double-tee member (24 ft [7.5 m] of which was broken off by flying debris) and damaged concrete diaphragm end closures.

5.4.6.3 Flood resistance

Concrete is not damaged by water; concrete that does not dry out continues to gain strength in the presence of moisture. Concrete submerged in water absorbs very small amounts of water even over long periods of time, and this water does not damage the concrete. Conversely, building materials such as wood and gypsum wallboard can absorb large quantities of water and cause moisture related problems. In flood-damaged areas, the concrete buildings are often salvageable.

Concrete will only contribute to moisture problems in buildings if it is enclosed in a building system that does not let it dry out, trapping moisture between the concrete and other building materials. For instance, impermeable vinyl wall coverings in hot and humid climates will act as a vapor retarder and moisture can get trapped between the concrete and wall covering. For this reason, impermeable wall coverings (such as vinyl wallpaper) should not be used in hot and humid climates.

5.4.6.4 Earthquake resistance

Precast concrete can be designed to be resistant to earthquakes. Earthquakes in Guam, United States (Richter Scale 8.1); Manila, Philippines (Richter Scale 7.2); and Kobe, Japan (Richter Scale 6.9), have subjected precast concrete buildings to some of nature's deadliest forces. Appropriately designed precast concrete framing systems have a proven capacity to withstand these major earthquakes.

Case study: The 1994 earthquake in Northridge, California (Richter Scale 6.8), was one of the costliest natural disasters in U.S. history. Total damage was estimated at $20 billion. Most engineered structures within the affected region performed well, including structures with precast concrete components. In particular, no damage was observed in precast concrete cladding due to either inadequacies of those components, or inadequacies of their connections to the building's structural systems, and no damage was observed in the precast concrete components used for the first floor or first-floor support of residential housing. It should be noted that parking structures with large plan areas—regardless of structural system—did not perform as well as other types of buildings.

5.4.7 Weather Resistance

5.4.7.1 High humidity and wind-driven rain

Precast concrete is resistant to wind-driven rain and moist, outdoor air in hot and humid climates. Concrete is impermeable to air infiltration and wind-driven rain. Moisture that enters a precast concrete building must come through joints between precast concrete elements. Annual inspection and repair of joints will minimize this potential. More importantly, if moisture does enter through joints, it will not damage the concrete.

Good practice for all types of wall construction is to have permeable materials that breathe (are allowed to dry) on at least one surface and not encapsulate concrete between two impermeable surfaces. Concrete breathes and will dry out. Therefore, as long as a precast concrete wall is allowed to breathe on at least one side and is not covered by an impermeable material on both wall surfaces, the potential for moisture problems within the wall system is minimal.

More information on condensation potential and moisture control in precast concrete walls is covered in Section 5.3.

5.4.7.2 Ultraviolet resistance

The ultraviolet (UV) range of solar radiation does not harm concrete. Using non-fading colored pigments in concrete retains the color in concrete long after paints have faded due to the sun's effects. Precast concrete is ideal for using pigments because the controlled production allows for replication of color for all panels for a project (Figs. 5.4.3 and 5.4.4).

5.4.8 Mitigating the Urban Heat Island Effect

Precast concrete provides reflective surfaces that minimize the urban heat island effect. Cities and urban areas are 3 to 8 °F (2 to 4 °C) warmer than surrounding areas due to the *urban heat island* effect. This difference is attributed to heat absorption of buildings and pavements that have taken the place of vegetation. Trees provide shade that reduces temperatures at the surface. Trees and plants provide transpiration and evaporation that cool the surfaces and air surrounding them. Research has shown the average temperature of Los Angeles has risen steadily over the past half century, and is now 6 to 7 °F (3 to 4 °C) warmer than 50 years ago.[32]

5.4.8.1 Warmer surface temperatures

Urban heat islands are primarily attributed to horizontal surfaces, such as roofs and pavements, that absorb solar radiation. In this context, pavements include roads, streets, parking lots, driveways, and walkways. Vertical surfaces, such as the sides of buildings, also contribute to this effect. Using materials with higher albedos, such as concrete, will reduce the heat island effect, save energy by reducing the demand for air conditioning, and improve air quality (Fig. 5.4.7).

Studies indicate people will avoid using air-conditioning at night if temperatures are less than 75 °F (24 °C). Mitigating the urban heat island effect to keep summer temperatures in cities less than that temperature at night has the potential to save large amounts of energy by avoiding air-conditioning use.

5.4.8.2 Smog

Smog levels have also been correlated to temperature rise. Thus, as the temperature of urban areas increases, so does the probability of smog and pollution. In Los Angeles, the probability of smog increases by 3% with every degree Fahrenheit of temperature rise. Studies for Los Angeles and 13 cities in Texas have found that there are almost never any smog episodes when the temperature is below 70 °F (21 °C). The probability of episodes begins at about 73 °F (23 °C) and, for Los Angeles, exceeds 50% by 90 °F (32 °C). Reducing the daily high in Los Angeles by 7 °F (4 °C) is estimated to eliminate two-thirds of the smog episodes.

Smog and air pollution are the main reasons EPA mandates expensive, clean fuels for vehicles and reduced particulate emissions from industrial facilities such as cement and asphalt production plants. The EPA now recognizes that air temperature is as much a contributor to smog as nitrogen oxide (NO_x) and volatile organic compounds (VOCs). The effort to reduce particulates in the industrial sector alone costs billions of dollars per year, whereas reduction in smog may be directly related to the reflectance and colors of the infrastructure that surround us. Installing low-albedo roofs, walls, and pavements is a cost-effective way to reduce smog.

5.4.8.3 Albedo (solar reflectance)

Albedo, which in this case is synonymous with solar reflectance, is the ratio of the amount of solar radiation reflected from a material surface to the amount shining on the surface. Solar radiation includes the ultraviolet as well as the visible spectrum. Albedo is measured on a scale not reflective (0.0) to 100% reflective (1.0). Generally, materials that appear to be light-colored in the visible spectrum have high albedo and those that appear dark-colored have low albedo. Because reflectivity in the solar radiation spectrum determines albedo, color in the visible spectrum is not always a true indicator of albedo.

Surfaces with lower albedos absorb more solar radiation. The ability to reflect infrared light is of great importance because infrared light is most responsible for heating. On a sunny day when the air temperature is 55 °F (13 °C), surfaces with dark acrylic paint will heat up to 90 °F (32 °C) more than air temperatures, to 145 °F (63 °C). Light surfaces, such as white acrylic, will heat up to 20 °F (11 °C) more, to a temperature of 75 °F (24 °C). The color and composition of the materials greatly affect the surface temperature and the amount of absorbed solar radiation. The effect of albedo and

32 Heat Island Group Home Page, eetd.lbl.gov/HeatIsland/.

Fig. 5.4.7
Cape Coral City Hall; Cape Coral Florida;
Architect: Spillis Candela/DMJM; Photo: Spillis Candela/DMJM.

High-reflecting (usually light-colored) surfaces help mitigate urban heat islands.

solar radiation on surface temperatures is referred to as the sol-air temperature and can be calculated.

Traditional portland cement concrete generally has an albedo or solar reflectance of approximately 0.4, although values can vary; measured values are reported in the range of 0.4 to 0.5. The solar reflectance of new concrete is greater when the surface reflectance of the sand and cementitious materials in the concrete are greater. Surface finishing techniques also have an effect, with smoother surfaces generally having a higher albedo. For concrete elements with "white" portland cement, values are reported in the range of 0.7 to 0.8. Albedo is most commonly measured using a solar-spectrum reflectometer (ASTM C 1549)[33] or a pyranometer (ASTM E 1918).[34]

33 American Society for Testing and Materials, ASTM C 1549, "Standard Test Method for Determination of Solar Reflectance Near Ambient Temperature Using a Portable Solar Reflectometer," Conshohocken, PA, www. ASTM.org.

34 American Society for Testing and Materials, ASTM E 1918, "Standard Test Method for Measuring Solar Reflectance of Horizontal and Low-Sloped Surfaces in the Field," West Conshohocken, PA.

5.4.8.4 Emittance

In addition to albedo, the material's surface emittance affects surface temperature. While albedo is a measure of the solar radiation reflected away from the surface, surface emittance is the ability of the material to emit, or "let go of" heat. A white surface exposed to the sun is relatively cool because it has a high reflectivity and a high emittance. A shiny metal surface is relatively warm because it has a low emittance, even though it has a high albedo. The emittance of most non-reflecting (non-metal) building surfaces such as concrete is in the range of 0.85 to 0.95. The emittance of aluminum foil, aluminum sheet, and galvanized steel, all dry and bright, are 0.05, 0.12, and 0.25, respectively.

5.4.8.5 Moisture

Moisture in concrete helps to cool the surface by evaporation. Concrete when placed has a moisture content of 100% relative humidity. The concrete surface gradually dries over a period of one to two years to reach equilibrium with its surroundings. Concrete surfaces exposed to rain and snow will continue to be wetted and dried. This moisture in the concrete surface will help to cool the concrete by evaporation whenever the vapor pressure of the moisture in the surface is greater than that of the air. In simpler terms, when the temperature and relative humidity of the air are greater than that just beneath the concrete surface, the concrete will dry and cool somewhat by evaporation.

The albedo of concrete decreases when the surface is wet. Consequently, albedo is lower when concrete is relatively new and the surface has not yet dried, and when the concrete becomes wet. The albedo of new concrete generally stabilizes within two to three months.

LEED Sustainable Sites Credit 7.1 on Heat Island Effect, Non-Roof. *The intent of this credit is to reduce heat islands. The requirements are met by placing a minimum of 50% of parking places underground or covered by a parking structure. Precast concrete parking structures, can be used to help obtain this point. Any roof used to shade or cover parking must meet specified criteria. This credit is worth 1 point.*

5.4.8.6 Mitigation approaches

One method to reduce the urban heat island effect is to change the albedo of the urban area. This is accomplished by replacing low albedo surfaces with materials of higher albedo. This change is most cost effective when done in the initial design or during renovation or replacement due to other needs. Planting trees for shade near buildings also helps mitigate the urban heat island effect. Shade also directly reduces the air-conditioning load on buildings. Using deciduous trees shades the buildings in the summer and allows the sun to reach the buildings in the winter.

5.4.8.7 Thermal mass and nocturnal effects

The *thermal mass* of concrete delays the time it takes for a surface to heat up but also delays the time to cool off. For example, a white non-concrete roof will get warm faster than concrete during the day, but will also cool off faster at night. Concrete surfaces are often warmer than air temperatures in the evening hours. Concrete's albedo and thermal mass will help mitigate heat island effects during the day but may contribute to the nocturnal heat island effect. The moisture absorbed by concrete during rain events helps reduce the daytime and nocturnal heat island effect when it evaporates. The challenge is to use concrete to mitigate heat islands while keeping evening temperatures as cool as possible.

5.4.9 Environmental Protection

5.4.9.1 Radiation and toxicity

One goal of sustainability is to reduce radiation and toxic materials; concrete provides an effective barrier against radiation and can be used to isolate toxic chemicals and waste materials. Concrete protects against the harmful effects of X-rays, gamma rays, and neutron radiation.

Concrete is resistant to most natural environments; it is sometimes exposed to substances that can attack and cause deterioration. Concrete in some chemical manufacturing and storage facilities must be specifically designed to avoid chemical attack. The resistance of concrete to chlorides is good, and using less permeable concrete can increase the resistance even more. This is achieved by using a low water-to-cementitious

materials ratio (around 0.40), adequate curing, and supplementary cementitious materials such as slag cement or silica fume. The best defenses against sulfate attack where this is an issue, are the measures suggested previously, in addition to using cement specially formulated for sulfate environments.

5.4.9.2 Resistance to noise

Precast concrete walls provide a buffer between outdoor noise and the indoor environment. Because land is becoming scarcer, buildings are being constructed closer together and near noise sources such as highways, railways, and airports. The greater mass of concrete walls can reduce sound penetrating through a wall by over 80% compared to wood or steel frame construction (Section 5.5). Although some sound will penetrate the windows, a concrete building is often two-thirds quieter than a wood or steel frame building.

Precast concrete panels also provide effective sound barriers separating buildings from highways or industrial areas from residential areas.

5.4.9.3 Security and impact resistance

Concrete is often used as a first line of defense against explosions or blasts. Rows of concrete planters or bollards are now positioned in front of most federal buildings such as court houses, office buildings. and other high-security areas. Decorative concrete walls are also used as a primary line of defense to prevent vehicles from coming close to buildings. From a holistic perspective, the barriers may also provide benches and a visual separation between the street and plaza.

5.4.10 Precast Concrete Production

The production of precast concrete has many environmental benefits, including:

1. Less materials are required because precise mixture proportions and tighter tolerances are achievable.
2. Optimal insulation levels can be incorporated into precast concrete sandwich panel walls.
3. Less concrete waste is created because of tight control of quantities of constituent materials.
4. Waste materials are more likely to be recycled because concrete production is in one location.
   a. Gray water often recycled into future mixtures.
   b. Hardened concrete recycled (presently about 5 to 20% of aggregate in precast concrete can be recycled concrete; in the future this could be higher.)
   c. Steel forms and other materials are reused.
5. Less dust and waste is created at the construction site because only needed precast concrete elements are delivered and there is no debris from formwork and associated fasteners—construction sites are cleaner and neater.
6. Fewer trucks and less time are required for construction because concrete is made offsite; this is particularly beneficial in urban areas where minimal traffic disruption is critical.
7. Precast concrete units are normally large components, so greater portions of the building are completed with each activity.
8. Less noise at construction site because concrete is made offsite.

LEED Sustainable Sites Credit 5.1 on Site Development, Protect, or Restore Habitat. *The intent of this credit is to encourage the conservation of natural areas on the site and restore damaged areas. The requirements are met by limiting site disturbance to prescribed distances. Tuck-under parking, such as precast concrete parking structures, can be used to help obtain this credit worth 1 point. Also precast concrete requires minimal site disturbance for erection of panels.*

LEED Sustainable Sites Credit 5.2 on Site Development, Maximize Open Space. *The intent of this credit is to provide a high ratio of open space to development footprint. The requirements are met by limiting the size of the development footprint; specifically, by exceeding the local zoning's open space requirement for the site by 25%. Tuck-under parking, such as precast concrete parking structures, can be used to help obtain this credit worth 1 point.*

Less concrete is generally used in precast concrete buildings than in other concrete buildings because of the optimization of materials. A properly designed precast concrete system will result in smaller structural members, longer spans, and less material used on-site; this translates directly into economic savings,

which can also result in environmental savings. Using less materials means using fewer natural resources and less manufacturing and transportation energy—not to mention the avoided emissions from mining, processing, and transporting raw and finished material.

Concrete products can provide both the building structure, and the interior and exterior finishes. Structurally efficient columns, beams, and slabs can be left exposed with natural finishes. Interior and exterior concrete walls offer a wide range of profile, texture, and color options that require little or no additional treatment to achieve aesthetically pleasing results. Exposed ceiling slabs and architectural precast concrete panels are some examples of this environmentally efficient approach. This structure/finish combination reduces the need for the production, installation, maintenance, repair, and replacement of additional finish materials. It also eliminates products that could otherwise degrade indoor air quality. This approach provides durable finishes that are not prone to damage or fire. Exposing the mass of the structure moderates heating and cooling loads.

5.4.10.1 Constituent materials

Concrete. Concrete is basically a mixture of two components: aggregates and paste. The paste, comprised of portland cement and water, binds the aggregates (usually sand and gravel or crushed stone) into a rock-like mass. The paste hardens because of the chemical reaction of the cement and water. Supplementary cementitious materials and chemical admixtures may also be included in the paste. The absolute volume of cement is usually between 7% and 15% and the water between 14% and 21%.

Portland Cement. Portland cement (hereafter called cement) is made by heating common minerals, primarily crushed limestone, clay, iron ore, and sand, to a white-hot mixture to form clinker. This intermediate product is ground, with a small amount of gypsum, to form a fine gray powder called cement. To trigger the necessary chemical reactions in the kiln, these raw materials must reach about 2700°F (1482°C)–the temperature of molten iron. Although the portland cement industry is energy intensive, the U.S. cement industry has reduced energy usage per ton of cement by 35% since 1972.[35,36]

35 Portland Cement Association, *U.S. and Canadian Labor-Energy Input Survey,* Skokie, IL,www.cement.org.

36 Portland Cement Association, "Report on Sustainable Manufacturing", *2006*,www.cement.org.

Carbon dioxide emissions from a cement plant are divided into two source categories: combustion and calcination. Combustion accounts for approximately 35% and calcination 65% of the total CO_2 emissions from a cement manufacturing facility. The combustion-generated CO_2 emissions are related to fuel use. The calcination CO_2 emissions are formed when the raw material is heated and CO_2 is liberated from the calcium carbonate. As concrete is exposed to the air and carbonates, it reabsorbs some of the CO_2 released during calcination. Calcination is a necessary key to cement production. Therefore, the focus of reductions in CO_2 emissions during cement manufacturing is on reducing fuel and energy use.

White portland cement is a true portland cement that differs from gray cement chiefly in color. The manufacturing process is controlled so that the finished product will be white. White portland cement is made of selected raw materials containing negligible amounts of iron and magnesium oxides–the substances that give cement its gray color. White cement is used primarily for architectural purposes in structural walls, precast concrete, and glass fiber reinforced concrete (GFRC) facing panels. Its use is recommended wherever white or colored concrete, grout, or mortar is desired. White portland cement should be specified as white portland cement meeting the specifications of ASTM C 150, Type I, II, III, or V.

Abundant Materials. Concrete is used in almost every country of the world as a basic building material. Aggregates, about 85% of concrete, are generally low-energy, local, naturally occurring sand and stone. Limestone and clay needed to manufacture cement are prevalent in most countries. Concrete contributes to a sustainable environment because it does not use scarce resources. Limestone and aggregate quarries are easily reused. While quarrying is intense, it is closely contained and temporary. When closed, aggregate quarries are generally converted to their natural state or into recreational areas or agricultural uses. In contrast, other material mining operations can be extensive and involve deep pits that are rarely restored, and deforestation can have negative environmental effects.

Fly Ash, Slag Cement, and Silica Fume. Fly ash, slag cement, and silica fume are industrial by-products; their use as a replacement for portland cement does not contribute to the energy and CO_2 effects of cement in concrete. If not used in concrete, these sup-

plementary cementitious materials (SCMs) would use valuable landfill space. Fly ash (Fig. 5.4.8 [a]) is a by-product of the combustion of pulverized coal in electric power generating plants. Slag cement (Fig. 5.4.8 [b]) is made from iron blast-furnace slag.[37] Silica fume (Fig. 5.4.8 [c]) is a by-product from the electric arc furnace used in the production of silicon or ferrosilicon alloy. These types of industrial by-products are considered post-industrial or pre-consumer recycled materials. Fly ash is commonly used at cement replacement levels up to 25%, slag cement up to 60%, and silica fume up to 5 to 7%. When slag cement replaces 50% of the portland cement in a 7500 psi (50 MPa) concrete mixture, greenhouse gas emissions per cu. yd. of concrete are reduced by 45%. Because the cementitious content of concrete is about 15%, these pozzolans typically account for only 2 to 5% of the overall concrete material in buildings.

Fig. 5.4.8(a), (b) & (c)

37 Slag Cement Association, "Slag Cement and the Environment," Slag Cement in Concrete No. 22, 2003, www. slagcement.org.

SCMs may slightly alter the color of hardened concrete. Color effects are related to the color and amount of the material used in concrete. Many SCMs resemble the color of portland cement and therefore have little affect on color of the hardened concrete. Some silica fumes may give concrete a slightly bluish or dark gray tint and tan fly ash may impart a tan color to concrete when used in large quantities. Slag cement and metakaolin (a clay SCM without recycled content) can make concrete lighter. Slag cement can initially impart a bluish or greenish undertone that disappears over time as concrete is allowed to dry.

The optimum amounts of supplementary cementing materials used with portland or blended cement are determined by testing, the relative cost and availability of the materials, and the specified properties of the concrete. When supplementary cementitious materials are used, the proportioned concrete mixture (using the project materials) should be tested to demonstrate that it meets the required concrete properties for the project. Some pozzolans increase curing times, but this is not as great a concern for precast concrete manufacturing as it is in cast-in-place applications where construction schedule has a greater impact.

The durability of products with recycled content materials should be carefully researched during the design process to ensure comparable life cycle performance. There would obviously be a net negative impact if a product offering a 20 to 30% recycled content had only half the expected service life of a product with a lower or no recycled content.

Recycled Aggregates. The environmental attributes of concrete can be improved by using aggregates derived from industrial waste or using recycled con-

crete as aggregates. Blast furnace slag is a lightweight aggregate with a long history of use in the concrete industry.

Recycled concrete can be used as aggregate in new concrete, particularly the coarse portion. When using the recycled concrete as aggregate, the following should be taken into consideration:

1. Recycled concrete as aggregate will typically have higher absorption and lower specific gravity than natural aggregate and will produce concrete with slightly higher drying shrinkage and creep. These differences become greater with increasing amounts of recycled fine aggregates.

2. Too many recycled fines can also produce a harsh and unworkable mixture. Many transportation departments have found that using 100% coarse recycled aggregate, but only about 10 to 20% recycled fines, works well.[38] The remaining percentage of fines is natural sand.

3. When crushing the concrete (Fig. 5.4.9), it is difficult to control particle size distribution, meaning that the "aggregate" may fail to meet grading requirements of ASTM C33.[39]

4. The chloride content of recycled aggregates is of concern if the material will be used in reinforced concrete. This is particularly an issue if the recycled concrete is from pavements in northern climates where road salt is freely spread in the winter.

5. The alkali content and type of aggregate in the system is probably unknown, and therefore if mixed with unsuitable materials, a risk of alkali-silica reaction (ASR) is possible.

Fig. 5.4.9 Crushed concrete from other sources can serve as recycled aggregate. Photo: Portland Cement Association.

38 Portland Cement Association, *Design and Control of Concrete Mixes*, Chapter 5, EB001, 2002, Skokie, IL.

39 American Society for Testing and Materials, ASTM C 33, "Standard Specification for Concrete Aggregates," West Conshohocken, PA, www.ASTM.org.

LEED Materials Credit 4 on Recycled Content. *The requirements of this credit state: "Use materials with recycled content such that post-consumer recycled content plus one-half of the pre-consumer content constitutes at least 10% (based on cost) of the total value of the materials in the project." The percentage is determined by multiplying the price of an item by the percent of recycled materials—on a mass basis—that make up that item. To earn this credit, the project must meet the threshold percentages based on the total of all permanently installed building materials used on the project. Supplementary cementitious materials, such as fly ash, silica fume, and slag cement, are considered pre-consumer. Since the cementitious content of concrete is about 15%, these pozzolans typically account for only 2 to 5% of the overall concrete material in buildings. For this reason, LEED-NC v2.2 allows the recycled content of concrete to be based on the recycled content of the cementitious materials. Using recycled concrete or slag as aggregate instead of extracted aggregates qualifies as post-consumer. Although most reinforcing bars are manufactured from recycled steel, in LEED, reinforcement is not considered part of concrete. Reinforcing material should be considered as a separate item. This credit is worth 1 point for the quantities quoted above and 2 points for double the amount.*

LEED Innovation Credit on Reducing Cement Content. *LEED has an innovation credit that allows 1 point for a 40% reduction of cement content compared to common practice. This can be met by using at least 40% less portland cement or replacing at least 40% of the cement in concrete with fly ash, slag cement, silica fume, or a combination of the three. Slag cement is commonly used at replacement levels up to 60%. However, fly ash replacement levels for portland cement greater than 25% are not common, as the fly ash and portland cement need to be chemically and physically compatible to ensure durable quality concrete that sets properly. For quality concrete, mixtures with fly ash at replacement levels greater than 25% should not be used without proven field experience or laboratory testing. Certain aesthetic (color) and stripping time restrictions will apply when using supplementary cementitious materials.*

Admixtures. The freshly mixed (plastic) and hardened properties of concrete may be changed by adding chemical admixtures to the concrete, usually in liquid form, during batching. Chemical admixtures are commonly used to (1) adjust setting time or hardening, (2) reduce water demand, (3) increase workability, (4) intentionally entrain air, and (5) adjust other fresh or hardened concrete properties. Admixtures provide enhancing qualities in concrete but are used in such small quantities that they do not adversely affect the environment. Their dosages are usually in the range of 0.005 to 0.2% of the concrete mass.

Color Pigments. Non-fading color pigments are used to provide the decorative colors in precast concrete. They are insoluble and generally non-toxic, although some may contain trace amounts of heavy metals. Many iron oxide pigments are primarily the byproduct of material recycling (manufactured by precipitating scrap steel).

Local Materials. Using local materials reduces the transportation required to ship heavy building materials, and the associated energy and emissions. Most precast concrete plants are within 200 miles (300 km) of a building site. The cement, aggregates, and reinforcing steel used to make the concrete and the raw materials to manufacture cement are usually obtained or extracted from sources within 200 miles of the precast concrete plant. The primary raw materials used to make cement and concrete are abundant in all areas of the world.

Precast concrete elements are usually shipped efficiently because of their large, often repetitive sizes and the ability to plan their shipment during the normal course of the project.

5.4.11 Energy Use in Buildings

Energy conservation is a key tenet of sustainability. About 90% of the energy used during a building's life is attributed to heating, cooling, and other utilities. The remaining 10% is attributed to manufacturing materials, construction, maintenance, replacement of components, and demolition.[40] Approximately 5% of the world's population resides in the U.S., yet 25% of the world's energy is consumed in the U.S. The U.S. dependence on foreign energy sources is greater than ever, which has an effect on U.S political and defense policies. Meanwhile, many developing nations like China have increased energy demands due to increased manufacturing and urbanization.

5.4.11.1 Energy codes

Energy codes provide cost effective, minimum building requirements that save energy. The energy saved is a cost savings through lower monthly utility bills, and smaller, and thus less expensive HVAC equipment. More than two-thirds of the electricity and one-third of the total energy in the U.S. are used to heat, cool, and operate buildings.[41] This means that implementing and enforcing energy codes will result in fewer power plants and natural resources being used to provide electricity and natural gas. It also means fewer emissions will be released into the atmosphere. Emissions have been

40 Marceau, M.L. and VanGeem, M.G., "Modeling Energy Performance of Concrete Buildings for LEED-NCv2.1 EA Credit 1," PCA R&D Serial No. 2880a, Portland Cement Association, Skokie, Illinois, 2006, www.cement.org.

41 "An Introduction to the U.S. Green Building Council and the LEED Green Building Rating System," a PowerPoint presentation on the USGBC website, October 2005, www.usgbc.org.

LEED Materials Credit 5 on Regional Materials. *The requirements of this credit state: "Use building materials or products that have been extracted, harvested, or recovered, as well as manufactured, within 500 miles (800 km) of the project site for a minimum of 10% (based on cost) of the total materials value." This means that a precast concrete plant within 500 miles of the building would qualify if the materials to make the concrete were extracted within 500 miles. Calculations can also include concrete either manufactured or extracted locally.*

Precast concrete will usually qualify because precast concrete plants are generally within 200 to 500 miles (300 to 800 km) of a project. Precast concrete plants generally use aggregates that are extracted within 50 miles (80 km) of the plant and within 200 to 500 miles of the project. Cement and supplementary cementitious materials used for buildings are also primarily manufactured within 500 miles of a project. Reinforcing steel is also usually manufactured within 500 miles of a project and is typically made from recycled materials from the same region.

Using materials that are extracted or manufactured locally supports the regional economy. In addition, reducing shipping distances for material and products to the project minimizes fuel requirements for transportation and handling. This credit is worth 1 point for the quantities quoted above and 2 points for double the amount, or 20% of the materials.

linked to smog, acid rain, and climate change. In the U.S. most buildings are constructed to meet minimum energy code requirements; energy codes contribute to sustainability by saving energy and protecting the environment.

Energy codes are effective in reducing per capita energy usage (energy use per person). The per capita energy use in California has remained steady due to the state's active use and enforcement of energy codes for buildings, while in the rest of the U.S. that energy use has increased (Fig. 5.4.10).

The U.S. Energy Conservation and Production Act[42] requires that each state certify it has a commercial building code that meets or exceeds ANSI/ASHRAE/IESNA Standard 90.1. In this sense, "commercial" means all buildings that are not low-rise residential (three stories or less above grade). This includes office, industrial, warehouse, school, religious, dormitories, and high-rise residential buildings. The ASHRAE standard and most codes recognize the benefits of thermal mass and require less insulation for mass walls.

Thermal mass in exterior walls have the following benefits and characteristics:

1. Delays and reduces peak loads.
2. Reduces total loads in many climates and locations.
3. Works best in commercial applications.
4. Works well in residential applications.
5. Works best when mass is exposed on the inside surface.
6. Works well regardless of the placement of mass.

Mass works well in commercial applications by delaying the peak summer load, which generally occurs around 3:00 p.m. to later when offices begin to close. As a case in point, the blackout in the northeastern U.S. in August 2003 occurred at 3:05 p.m.[43] A shift in peak load would have helped alleviate the demand and, possibly, this peak power problem.

Also, many commercial and industrial customers incur significant time-of-use utility rate charges for the highest use of electricity for any 1 hour in a month in the summer. Thermal mass may help shift the peak hour of electric demand for air conditioning to a later hour, and help reduce these time-of-use charges. Nighttime ventilation can be used to cool thermal mass that has been warmed during the day. Local outdoor humidity levels influence the effectiveness of nighttime ventilation strategies.

As occupant and equipment heat is generated, it is absorbed not only by the indoor ventilated air but also by the massive elements of the building. Mass works well

42 1992 National Energy Policy Act, U.S. Department of Energy, www.DOE.gov.

43 U.S. Department of Energy, *Final Report on the August 14, 2003 Blackout in the United States and Canada: Causes and Recommendations*, 2004, Washington, DC.

Fig. 5.4.10
Energy savings due to implementation of energy codes in 1976 in California (California Energy Commission).

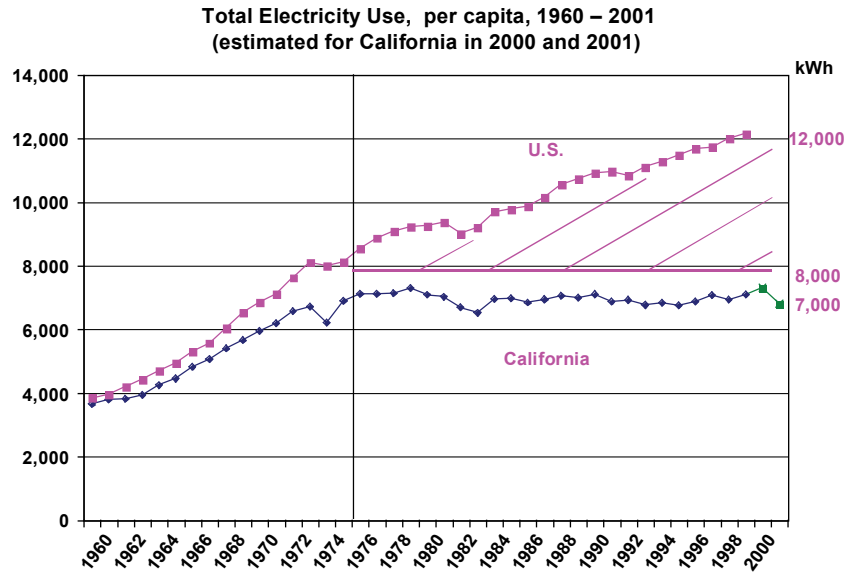

LEED Energy and Atmosphere Prerequisite 2 on Minimum Energy Performance. *All buildings must comply with certain sections on building energy efficiency and performance as required by the ANSI/ASHRAE/IESNA 90.1-2004, Energy Standard for Buildings Except Low-Rise Residential Buildings, or the local energy code, whichever is more stringent. The ASHRAE standard is usually more stringent and applies for most states. This prerequisite is a requirement and is not worth any points. The requirements of the ASHRAE standard are cost-effective and not particularly stringent for concrete. Insulating to meet or exceed the requirements of the standard is generally a wise business choice. Determining compliance for the envelope components is relatively straightforward using the tables in Chapter 5 of the ASHRAE standard. Minimum requirements are provided for mass and non-mass components such as walls and floors.*

on the inside surfaces by absorbing the heat gains generated by people and equipment indoors. Interior mass from interior walls, floors, and ceiling will help moderate room temperatures and reduce peak energy use.

Thermal mass is most effective in locations and seasons where the daily outdoor temperature rises above and falls below the balance point temperature of the building. The balance point temperature is the outdoor temperature below which heating will be required. It is less than room temperature, generally between 50 and 60°F (10 and 15°C), at the point where internal heat gains are about equal to the heat losses through the building envelope. In many climates, buildings with thermal mass have lower energy consumption than non-massive buildings with walls of similar thermal resistance. In addition, heating and cooling needs can be met with smaller equipment sizes.

More information on thermal properties and energy code compliance of precast concrete walls is available in Section 5.3.

5.4.11.2 Lighting

Light-colored precast concrete and other surfaces will reduce energy costs associated with indoor and outdoor lighting. The more reflective surfaces will reduce the amount of fixtures and lighting required. Light-colored precast concrete exposed to the interior will help reduce interior lighting requirements, and light-colored exterior walls will reduce outdoor lighting requirements.

5.4.11.3 Air infiltration

Precast concrete panels have negligible air infiltration. Minimizing air infiltration between panels and at floors and ceilings will provide a building with low air infiltration. These effects will lower energy costs and help prevent moisture problems from infiltration of humid air. In hot and humid climates in the southeastern U.S., infiltration of moist air is a source of unsightly and unhealthy moisture problems in buildings. Some building codes[44] now limit air leakage of building materials to 0.004 cfm/ft^2 (0.0012 m^3/min/m^2) under a pressure differential of 0.3 in. (7.6 mm) water (1.57 psf [0.75 kPa]); precast concrete meets this requirement. Table 5.4.4 lists the measured air leakage values for selected building materials.

5.4.11.4 Advanced energy guidelines

Sustainability or green building programs (such as LEED™ or EnergyStar) encourage energy savings beyond minimum code requirements. The energy saved is a cost-savings to the building owner through lower monthly utility bills and smaller, less expensive heating, ventilat-

Table 5.4.4 Measured Air Leakage for Selected Building Materials.

Material	Average Leakage at 0.3 in. Water, cfm/ft^2 Surface
6 mil (0.15 mm) polyethylene	No measurable leakage
1 in. (25 mm) expanded polystyrene	1.0
$^1/_2$ in. (12 mm) fiberboard sheathing	0.3
Breather type building membranes	0.002 – 0.7
Closed cell foam insulation	0.0002
Uncoated brick wall	0.3
Uncoated concrete block	0.4
Precast concrete wall	No measurable leakage

44 Massachusetts Energy Code, www.mass.gov/bbrs/780_CMR_Chapter_13.pdf.

ing, and air-conditioning (HVAC) equipment. Some government programs offer tax incentives for energy-saving features. Other programs offer reduced mortgage rates. The EnergyStar program offers simple computer programs to determine the utility savings and lease upgrades associated with energy saving upgrades.

Many energy-saving measures are cost-effective even though they exceed minimum codes. Insulation and other energy-saving measures in building codes generally have a payback of about 5 years, even though the building life may be anywhere from 30 to 100 years. The New Buildings Institute has developed the E-Benchmark guidelines to save energy beyond codes (see www.NewBuildings.org). *ASHRAE Advanced Energy Design Guide For Small Office Buildings* (see www.ASHRAE.org) has a similar purpose. Many utilities are interested in these advanced guidelines to delay the need for new power plants.

The panelized construction of precast concrete lends itself to good practice and optimization of insulation levels. To maximize the effectiveness of the insulation, thermal bridges should be minimized or avoided. Metal thermal bridges may occur as connectors that penetrate insulation to connect concrete layers. Concrete thermal bridges may occur at the bottom and top of concrete panels. Using fiberglass or carbon-fiber composite fasteners or thermal breaks may minimize thermal bridges.

LEED Energy Credit 1 on Optimizing Energy Performance. *This credit is allowed if energy cost savings can be shown compared to a base building that meets the requirements of ANSI/ASHRAE/IESNA 90.1-2004, Energy Standard for Buildings Except Low-Rise Residential Buildings. The method of determining energy cost savings must meet the requirements of Appendix G "Performance Rating Method" of the standard.*

Many engineering consulting firms have the capability to model a building to determine energy savings as required using a computer-based program such as DOE2. When concrete is considered, it is important to use a program like DOE2[1] that calculates annual energy use on an hourly basis. Such programs are needed to capture the beneficial thermal mass effects of concrete. Insulated concrete systems, used in conjunction with other energy savings measures will most likely be eligible for LEED points. The number of points awarded will depend on the building, climate, fuel costs, and minimum requirements of the standard. From 1 to 10 LEED points are awarded for energy cost savings of 10.5% to 42% for new buildings and 3.5% to 35% for existing buildings (Table 5.4.5). A small office building less than 20,000 ft^2 (1900 m^2) complying with ASHRAE "Advanced Energy Design Guide For Small Office Buildings 2004" can achieve 4 points, and a building complying with "E-Benchmark" v1.1 (www.newbuildings.org) can achieve 1 point.

1 Visual DOE 4.0, Architectural Energy Corporation, Boulder, CO, www.archenergy.com.

Table 5.4.5 LEED NC v2.2 Points Awarded for Energy Costs Saved Beyond Minimum Code.

New Buildings, Energy Saved	Existing Buildings, Energy Saved	Points
10.5%	3.5%	1
14%	7%	2
17.5%	10.5%	3
21%	14%	4
24.5%	17.5%	5
28%	21%	6
31.5%	24.5%	7
35%	28%	8
38.5%	31.5%	9
42%	35%	10

5.4.12 Indoor Environmental Quality

Concrete contains low to negligible VOCs. These compounds degrade indoor air quality when they off gas from new products, such as interior finishings, carpet, and furniture. Manufactured wood products such as laminate, particle board, hardboard siding, and treated wood can also lead to off gassing. In addition, VOCs combine with other chemicals in the air to form ground-level ozone. Table 5.4.6 presents the VOC concentration and emission rates for common materials. Complaints due to poor indoor air quality routinely include eye, nose, and throat irritation; dryness of the mucous membranes and skin; nose bleeds; skin rash; mental fatigue and headache; cough; hoarseness; wheezing; nausea; dizziness; and increased incidence of asthma.

Polished concrete floors do not require carpeting. Exposed concrete walls do not require finishing materials–this eliminates particulates from sanding drywall tape seams. VOCs in concrete construction can be further reduced by using low-VOC materials for form release agents, curing compounds, dampproofing materials, wall and floor coatings and primers, membranes, sealers, and water repellents.

Table 5.4.6 Concentrations and Emission Rates of VOCs for Common Materials.

Building Material	VOC Concentration, mg/m³	VOC Emission Rate, mg/m²h
Concrete with water-based form-release agent	0.018	0.003
Acryl latex paint	2.00	0.43
Epoxy, clear floor varnish	5.45	1.3
Felt carpet	1.95	0.080
Gypsum board	N/A	0.026
Linoleum	5.19	0.22
Particle board	N/A	2.0
Plastic silicone sealer	77.9	26.0
Plywood paneling	N/A	1.0
Putty strips	1.38	0.34
PVA glue cement	57.8	10.2
Sheet vinyl flooring	54.8	2.3
Silicone caulk	N/A	<2.0
Water-based EVA wall and floor glue	1,410.0	271.0

Note: 1 mg/m³ = 0.000009 oz/yd³; 1 mg/m²h = 0.00001 oz/yd²h.

LEED Indoor Environmental Quality Credit 3.1 on Construction IAQ Management Plan, During Construction. *This credit prevents indoor air quality problems resulting from the construction process. The intent is to reduce and contain dust and particulates during construction and to reduce moisture absorbed by materials that are damaged by moisture. During construction, the project must meet or exceed the recommended Design Approaches of the Sheet Metal and Air Conditioning National Contractors Association (SMACNA) IAQ Guidelines for Occupied Buildings under Construction, 1995, Chapter 3 on Control Measures (www.smacna.org). Using precast concrete can help meet the requirements because it is delivered to the site in pieces that do not require fabrication, processing, or cutting, thereby reducing dust and airborne contaminants on the construction site. Concrete is not damaged by moisture and does not provide nutrients for mold growth. This credit is worth one point.*

5.4.13 Demolition

Precast concrete panels can be reused when buildings are expanded and precast concrete can be recycled as road base or fill at the end of its useful life. Concrete pieces from demolished structures can be reused to protect shorelines. Most concrete from demolition in urban areas is recycled and not placed in landfills.

LEED Materials Credit 2 on Construction Waste Management. *This credit is extended for diverting construction and demolition debris and land clearing waste from landfill disposal. It is awarded based on diverting at least 50% by weight or volume of the previously listed materials. Since precast concrete is a relatively heavy construction material and is frequently crushed and recycled into aggregate for road bases or construction fill, this credit should be obtainable when concrete buildings are demolished. This credit is worth 1 point if 50% of the construction, and demolition debris and land clearing waste is recycled or salvaged and 2 points for 75%.*

5.4.14 Innovation

LEED Innovation and Design Process Credit 1. *This credit is available for projects that demonstrate exceptional performance above the requirements in LEED or not specifically addressed in LEED. For example, close collaboration with engineers on a given project to develop innovative systems that are more resource efficient or use less energy may earn a project an additional point. To earn credits (up to 4), the user must submit the intent of the proposed credit, the proposed requirement for compliance, submittals to demonstrate that compliance, and the design approach used to meet the requirement.*

LEED Innovation and Design Process Credit 2. *One point is also given if a principal participant of the project team is a LEED Accredited Professional. The concrete industry has LEED-experienced professionals available to assist teams with concrete applications and help maximize points for concrete.*

5.4.15 Conclusion

Sustainable practices contribute to saving materials and energy and reducing the negative effects of pollutants. The use of precast concrete contributes to these practices by incorporating integrated design, using materials efficiently, and reducing construction waste, site disturbance, and noise. Concrete is durable, resistant to corrosion and impact, and inedible.

Precast concrete structures are resistant to fires, wind, hurricanes, floods, earthquakes, wind-driven rain, blast forces, and moisture damage. Light- or natural-colored concrete reduces heat islands, thereby reducing outdoor temperatures, saving energy, and reducing smog. Recycled materials such as fly ash, slag cement, silica fume, and recycled aggregates can be incorporated into concrete, thereby reducing the amount of materials that are taken to landfills and reducing the use of virgin materials.

Concrete structures in urban areas are recycled into fill and road base material at the end of their useful life. Cement and concrete are generally made of abundant local materials. The thermal mass of concrete helps save heating and cooling energy in buildings. Concrete acts as an air barrier, reducing air infiltration and saving more energy. Concrete has low VOC emittance and does not degrade indoor air quality.

Sustainability attributes can be evaluated by performing a life cycle assessment. Because these procedures are time consuming, green building rating systems such as LEED have become popular. Precast concrete can help a project earn up to 23 points towards LEED certification for new buildings (a total of 26 are required.)

5.5 ACOUSTICAL PROPERTIES

5.5.1 Glossary

Airborne sound – Sound that reaches the point of interest by propagation through air.

Background level – The ambient sound-pressure level existing in a space

Decibel (dB) – A logarithmic unit of measure of sound pressure or sound power. Zero on the decibel scale corresponds to a standardized reference pressure (20μPa) or sound power (10^{-12} watt).

Flanking transmission – Transmission of sound by indirect paths other than through the primary barrier.

Frequency (Hz) – The number of complete vibration cycles per second.

Noise – Unwanted sound.

Noise criteria (NC) – A series of curves, used as design goals to specify satisfactory background sound levels as they relate to particular use functions.

Noise reduction (NR) – The difference in decibels between the space-time average sound pressure levels produced in two enclosed spaces by one or more sound sources in one of them.

Noise reduction coefficient (NRC) – The arithmetic average of the sound absorption coefficients at 250, 500, 1000, and 2000 Hz expressed to the nearest multiple of 0.05.

RC curves – A revision of the NC curves based on empirical studies of background sounds.

Reverberation – The persistence of sound in an enclosed or partially enclosed space after the source of sound has stopped.

Sabin – The unit of measure of sound absorption.

Sound absorption coefficient – The fraction of randomly incident sound energy absorbed or otherwise not reflected off a surface.

Sound pressure level (SPL) – Ten times the common logarithm of the ratio of the square of the sound pressure to the square of the standard reference pressure of 20μPa. Commonly measured with a sound level meter and microphone, this quantity is expressed in decibels.

Sound transmission class (STC) – The single number rating system used to give a preliminary estimate of the sound insulation properties of a partition system. This rating is derived from measured values of transmission loss.

Sound transmission loss (TL) –Ten times the com-

mon logarithm of the ratio, expressed in decibels, of the airborne sound power incident on the partition that is transmitted by the partition and radiated on the other side.

Structure-borne sound – Sound that reaches the point of interest over at least part of its path by vibration of a solid structure.

5.5.2 General

The basic purpose of architectural acoustics is to provide a satisfactory environment in which the desired sounds are clearly heard by the intended listeners and the unwanted sounds (noise) are isolated or absorbed. The sound-reduction needs of a building are determined based on location, environmental ambiance, and the degree of sound reduction necessary for occupants to function effectively.

Under most conditions, the architect can design the building to satisfy the acoustical needs of the tenant. Good acoustical design uses reflective and absorptive surfaces, sound barriers, and vibration isolators. Some surfaces must reflect sound so that the loudness will be adequate in all areas where listeners are located. Other surfaces must absorb sound to avoid echoes, sound distortion, and long reverberation times. Sound is isolated from rooms where it is not wanted by selected wall and floor/ceiling constructions. Vibrations generated by mechanical equipment are isolated from the structural frame of the building by means of mechanical isolators or compressible materials.

Most acoustical situations can be described in terms of: (1) sound source, strength, and path; (2) sound transmission path; and (3) sound receiver.

5.5.3 Sound Levels

The problems of sound insulation are usually considerably more complicated than those of sound absorption. Sound insulation involves greater reductions in sound level than can be achieved by absorption. These large reductions can only be achieved by continuous, impervious barriers. If the problem also involves structure-borne sound, it may be necessary to introduce resilient layers or discontinuities into the barrier.

Sound absorbing materials and sound insulating materials are used for two different purposes. There is not much sound absorption from an 8 in. (200 mm) concrete wall; similarly, low sound transmission is not available from a porous, lightweight material that may be applied to room surfaces for sound absorption. It is important to recognize that the basic mechanisms of sound absorption and sound insulation are quite different.

Fig. 5.5.1
Sound transmission class as a function of wall weight.

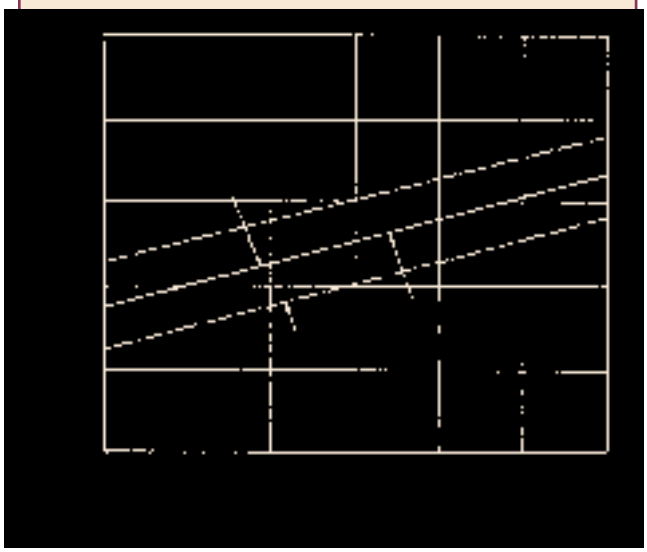

Fig. 5.5.2
Acoustical test data of solid flat concrete panels – normalweight concrete.

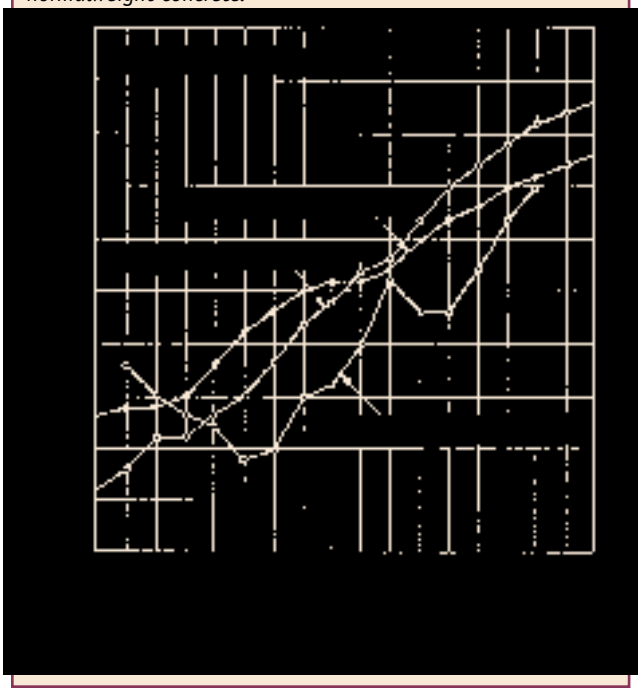

5.5.4 Sound Transmission Loss

Sound transmission loss measurements are made at 16 frequencies at one-third octave intervals covering the range from 125 to 4000 Hz. The testing procedure is described in ASTM E 90, *Laboratory Measurement of Airborne Sound Transmission Loss of Building Partitions*. Measurements can also be made in buildings by following ASTM E 336, *Measurement of Airborne Sound Insulation in Buildings*. To simplify specification of desired performance characteristics the single number Sound Transmission Class (STC) (see ASTM E 413) was developed. It was originally designed to assess sound (human speech) privacy for interior walls, but its use has expanded to cover virtually all types of partitions and partition elements.

Table 5.5.1 Airborne Sound Transmission Class Ratings from Tests of Precast Concrete Assemblies.

Assembly No.	Description	STC[1] (OITC)
1	4 in. flat panel, 54 psf	49 (43)
2	5 in. flat panel, 60 psf	52[2]
3	6 in. flat panel, 75 psf	55 (46)
4	Assembly 2 with "Z" furring channels, 1 in. insulation and 1/2 in. gypsum board, 75.5 psf	62
5	Assembly 2 with wood furring, 1 1/2 in. insulation and 1/2 in. gypsum board, 73 psf	63
6	Assembly 2 with 1/2 in. space, 1 5/8 in. metal stud row, 1 1/2 in. insulation and 1/2 in. gypsum board	63[2]
7	8 in. flat panel, 95 psf	58 (50)
8	10 in. flat panel, 120 psf	59[2]

1 The STC of sandwich panels is about the same as the STC of the thickness of the two concrete wythes (ignoring the insulation thickness).

2 Estimated values.

Table 5.5.2 Typical Improvements for Wall Treatments Used with Precast Concrete Elements.

Treatment	Increased Airborne STC
Wall furring, 3/4 in. insulation and 1/2 in. gypsum board attached to concrete wall	3
Separate metal stud system, 1 1/2 in. insulation in stud cavity and 1/2 in. gypsum board attached to concrete wall	5 to 10
Plaster direct to concrete	0

Airborne sound reaching a wall, floor, or ceiling produces vibrations in the wall that are radiated with reduced intensity on the other side. Airborne sound transmission loss in wall assemblies is a function of their weight, stiffness, and vibration damping characteristics.

Weight is concrete's greatest asset when it is used as a sound insulator. For sections of similar design, but different weights, the STC increases approximately 6 units for each doubling of weight (Fig. 5.5.1). This figure describes sound transmission class as a function of weight based on experimental data. Precast concrete walls usually do not need additional treatments in order to provide adequate sound insulation. If desired, greater sound insulation can be obtained by using a resiliently attached layer(s) of gypsum board or other building material. The increased transmission loss occurs because the energy flow path is increased to include a dissipative air column and additional mass.

The acoustical test results of airborne sound transmission loss of 4, 6, and 8 in. (100, 150, and 200 mm) solid flat panels are shown in Fig. 5.5.2. Table 5.5.1 presents the ratings for various precast concrete assemblies. The effects of various assembly treatments on sound transmission can also be predicted from results of previous tests shown in Table 5.5.2. The improvements are additive, but in some cases the total effect may be slightly less than the sum.

The mass of the precast/prestressed concrete load-bearing sandwich wall panels prevented outside noises from entering the building in Fig. 5.5.3. The design of this auditorium required selected areas of high resolution and reflectivity, which was achieved by using the 8 in.-thick (200 mm) curved interior wall panels to distribute sound throughout the hall in a geometrically controlled fashion. They also serve as structural members. Some 200 curved, sandblasted panels, employing eight different radii, were created to meet all of the acoustical requirements. They were given a staining sealer for aesthetic effects.

5.5.5 Absorption of Sound

A sound wave always loses part of its energy as it is reflected by a surface. This loss of energy is called

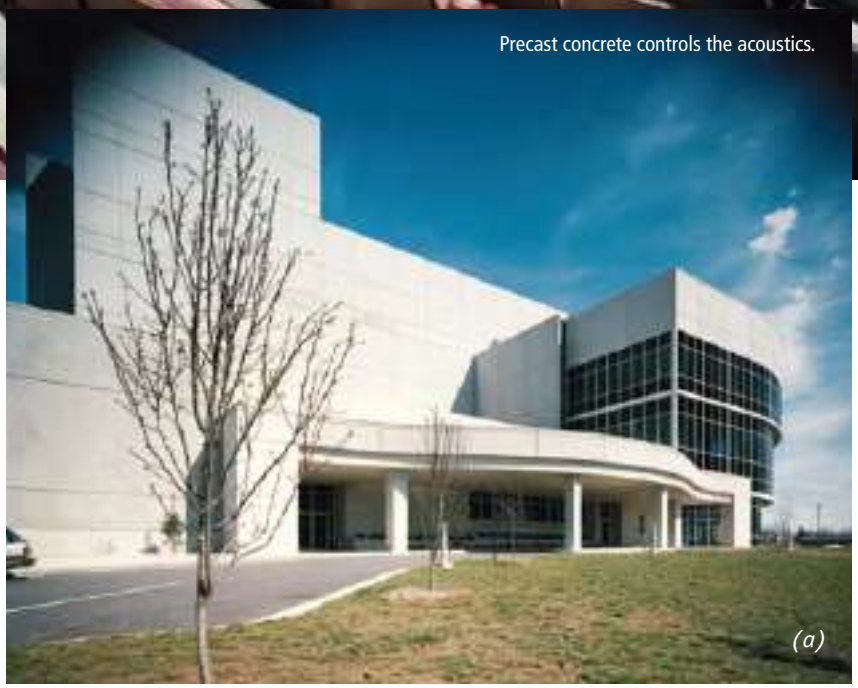

Fig. 5.5.3
The Juanita K. Hammons Hall for the Performing Arts, Springfield, Missouri; Architect: Pellham-Phillips-Hagerman and Butler, Rosenbury & Partners (joint venture); Photos: Pellham-Phillips-Hagerman.

sound absorption. It appears as a decrease in sound pressure of the reflected wave. The sound absorption coefficient is the fraction of energy incident but not reflected per unit of surface area. Sound absorption can be specified at individual frequencies or as an average of absorption coefficients (NRC). A dense, non-porous concrete surface typically absorbs 1 to 2% of incident sound and has an NRC of 0.015. In cases where additional sound absorption is desired, a coating of acoustical material can be spray-applied, acoustical tile can be applied with adhesive, or an acoustical ceiling can be suspended. Most of the spray-applied fire-retardant materials used to increase the fire resistance of precast concrete and other floor-ceiling systems can also be used to absorb sound. The NRC of the sprayed fiber types range from 0.25 to 0.75. Most cementitious types have an NRC from 0.25 to 0.50.

5.5.6 Acceptable Noise Criteria

As a rule, a certain amount of continuous sound can be tolerated before it becomes noise. An "acceptable" level neither disturbs room occupants nor interferes with the communication of wanted sound.

The most generally accepted noise criteria (NC) used today are expressed as the Noise Criteria or the Room Criteria (RC) curves (Fig. 5.5.4, Table 5.5.3 and Fig. 5.5.5).

The figures in Table 5.5.4 represent general acoustical goals. They can also be compared with anticipated noise levels in specific rooms to assist in evaluating noise-reduction problems.

The main criticism of NC curves is that they are too permissive when the control of low or high frequency noise is of concern. For this reason, room criteria (RC) curves were developed (Fig. 5.5.5). RC curves are the result of extensive studies based on the human response to both sound-pressure level and frequency

Fig. 5.5.4 Noise criteria (NC) curves.

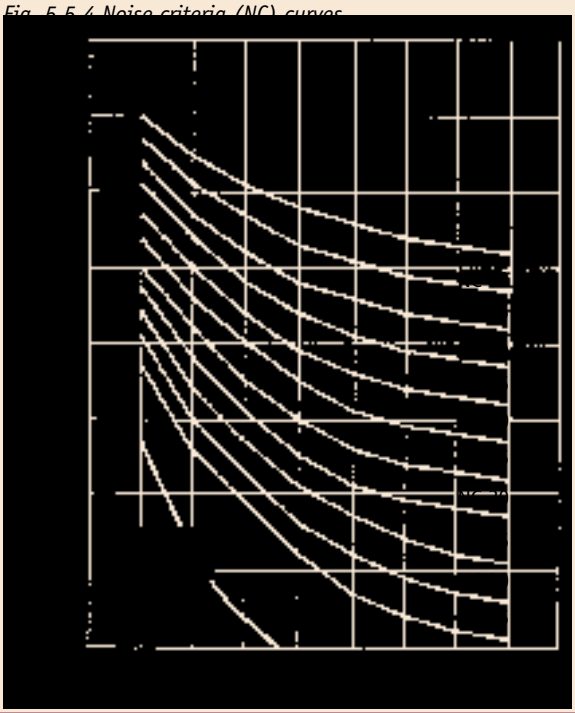

Table 5.5.3 Data for noise criteria curves.

Noise Criteria Curves	Octave Band Center Frequency, Hz							
	63	125	250	500	1000	2000	4000	8000
NC-15[1]	47	36	29	22	17	14	12	11
NC-20[1]	51	40	33	26	22	19	17	16
NC-25[1]	54	44	37	31	27	24	22	21
NC-30	57	48	41	35	31	29	28	27
NC-35	60	52	45	40	36	34	33	32
NC-40	64	56	50	45	41	39	38	37
NC-45	67	60	54	49	46	44	43	42
NC-50	71	64	58	54	51	49	48	47
NC-55	74	67	62	58	56	54	53	52
NC-60	77	71	67	63	61	59	58	57
NC-65	80	75	71	68	66	64	63	62

1 The applications requiring background levels less than NC-25 are special purpose spaces in which an acoustical consultant should set the criteria.

and take into account the requirements for speech intelligibility.

Table 5.5.4 Recommended Category Classification and Suggested Noise Criteria Range for Steady Background Noise as Heard in Various Indoor Functional Activity Areas.[1]

Type of Space	NC or RC Curve
1. Private residence	25 to 30
2. Apartments	30 to 35
3. Hotels/motels	
a. Individual rooms or suites	30 to 35
b. Meeting/banquet rooms	30 to 35
c. Halls, corridors, lobbies	35 to 40
d. Services/support areas	40 to 45
4. Offices	
a. Executive	25 to 30
b. Conference rooms	25 to 30
c. Private	30 to 35
d. Open-Plan areas	35 to 40
e. Computer/business machine areas	40 to 45
f. Public circulation	40 to 45
5. Hospitals and clinics	
a. Private rooms	25 to 30
b. Wards	30 to 35
c. Operating rooms	25 to 30
d. Laboratories	30 to 35
e. Corridors	30 to 35
f. Public areas	35 to 40
6. Churches	25 to 30[2]
7. Schools	
a. Lecture and classrooms	25 to 30
b. Open-Plan classrooms	30 to 35[2]
8. Libraries	30 to 35
9. Concert halls[2]	
10. Legitimate theaters[2]	
11. Recording studios[2]	
12. Movie theaters	30 to 35

1 Design goals can be increased by 5dB when dictated by budget constraints or when noise intrusion from other sources represents a limiting condition.

2 An acoustical expert should be consulted for guidance on these critical spaces.

Fig. 5.5.5 Room criteria (RC) curves.

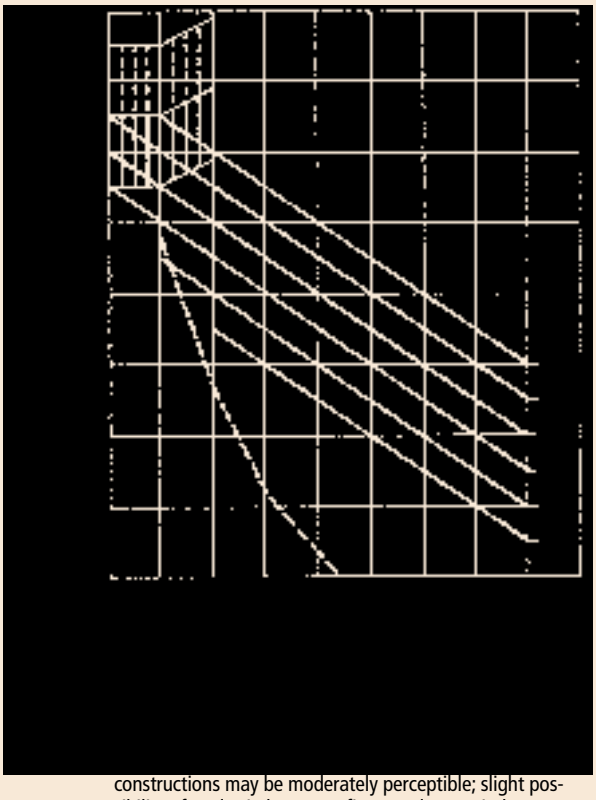

constructions may be moderately perceptible; slight possibility of rattles in low mass fixtures, doors, windows, etc.

Region C: Below threshold of hearing for continuous noise.

A low background level obviously is necessary where listening and speech intelligibility is important. Conversely, higher ambient levels can persist in large business offices or factories where speech communication is limited to short distances. Often, the minimum target levels are just as important as the maximum permissible levels listed in Table 5.5.4. In an office or residence, it is desirable to have a certain ambient sound level to assure adequate acoustical privacy between spaces and minimize the transmission loss requirements of unwanted sound (noise).

These undesirable sounds may be from exterior sources such as automobiles and aircraft, or they may be generated as speech in an adjacent classroom or music in an adjacent apartment. They may also be direct impact-induced sound such as footfalls on the floor above, rain on a lightweight roof construction, or vibrating mechanical equipment. Thus, the designer must always be ready to accept the task of analyzing the many potential sources of intruding sound as related to their frequency characteristics and the rates at which they occur. The level of toleration that is to be

expected by those who will occupy the space must also be established. Figures 5.5.6 and 5.5.7 are the spectral characteristics of common noise sources.

With these criteria, the problem of sound isolation now must be solved, namely the reduction process between the high, unwanted noise source and the desired ambient level. Once the objectives are established, the designer then should refer to available data (for example in Fig. 5.5.1 or Table 5.5.1) and select the system that best meets these requirements. In this respect, precast concrete systems have superior properties and can, with minimal effort, comply with these criteria. When the insulation value has not been specified, selection of the necessary barrier can be determined analytically by (a) identifying exterior and /or interior noise sources, and (b) by establishing acceptable interior noise criteria.

Fig. 5.5.6 Sound pressure levels — exterior noise sources.

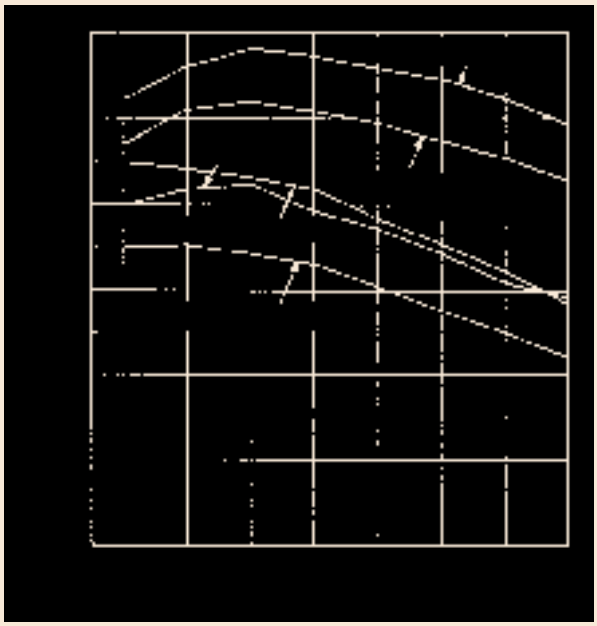

Fig. 5.5.7 Sound pressure levels — interior noise sources.

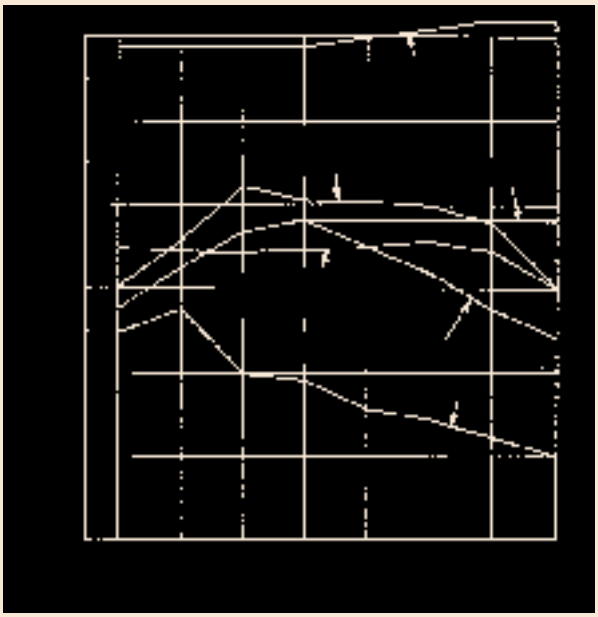

Example: Sound Insulation Criteria

Assume a precast concrete office building is to be erected adjacent to a major highway. Private and semi-private offices will run along the perimeter of the structure. The first step is to determine the degree of insulation required of the exterior wall system (see Sound Pressure Level 1). The NC data is used because it is more familar to and preferred by designers.

The 500 Hz requirement, 38 dB, can be used as the first approximation of the wall STC category. However, if windows are planned for the wall, a system of about 50–55 STC should be selected (see following composite wall discussion). Individual transmission loss performance values of this system are then compared to the calculated need (see Sound Pressure Level 2).

The selected wall should meet or exceed the insulation needs at all frequencies. However, to achieve the most efficient design conditions, certain limited deficiencies can be tolerated. Experience has shown that the maximum deficiencies are 3 dB at two frequencies or 5 dB on one frequency point.

5.5.7 Composite Wall Considerations

An acoustically composite wall is made up of elements of varying acoustical properties. Windows and doors are often the weak link in an otherwise effective sound barrier. Minimal effects on sound transmission loss will be achieved in most cases by proper selection of glass (Table 5.5.5). The control of sound transmission through windows requires large cavities between layers (multiple glazing), heavy layers (thicker glass), laminated glass, and reduction of the structural connection between layers (separate frames and sashes for inner and outer layers). Also, mounting of glass lites with soft neoprene edge gaskets may not be as effective at reducing sound transmission as systems that use wet seals (gunable sealants). The combination of wet seals with butyl tape or open cell foam dra-

Sound Pressure Level 1.

Sound Pressure Level – (dB)								
Frequency (Hz)	**63**	**125**	**250**	**500**	**1000**	**2000**	**4000**	**8000**
Bus traffic source noise (Fig. 5.5.6)	80	83	85	78	74	68	62	58
Private office noise criteria – NC 35 (Fig. 5.5.4)	60	52	45	40	36	34	33	32
Required insulation	20	31	40	38	38	34	29	26

matically reduces the potential for air infiltration, and therefore, flanking sound transmission. They certainly have to be as airtight as possible; usually fixed windows provide much better sound transmission control than operable windows.

Sound pressure impinging on the window framing will cause it to vibrate, transmitting sound to the building interior. Consequently, the window-

Sound Pressure Level 2.

Sound Pressure Level – (dB)						
Frequency (Hz)	**125**	**250**	**500**	**1000**	**2000**	**4000**
Required insulation	31	40	38	38	34	29
6 in. precast concrete solid concrete wall (Fig. 5.5.2)	38	43	52	59	67	72
Deficiencies	-	-	-	-	-	-

Table 5.5.5 Acoustical Properties of Glass.

Sound Transmission Class (STC)					
Type and Overall Thickness, in.	**Inside Lite, in.**	**Construction Space, in.**	**Outside Lite, in.**	**STC**	**OITC**
$^5/_8$ Insulated Glass	$^1/_8$	$^3/_8$	$^1/_8$	31	26
$^1/_4$ Plate or Float	—	—	$^1/_4$	31	29
$^1/_2$ Plate or Float	—	—	$^1/_2$	36	32
1 Insulated glass	$^1/_4$	$^1/_2$ Air space	$^1/_4$	35	28-30
$^1/_4$ Laminated	$^1/_8$	0.030 Vinyl	$^1/_8$	35	—
1$^1/_2$ Insulated glass	$^1/_4$	$^9/_{16}$ Air space	$^3/_{16}$	37	28-30
$^3/_4$ Plate or Float	—	—	$^3/_4$	36	—
1 Insulated glass	$^1/_4$ Laminated	$^1/_2$ Air space	$^1/_4$	39	31
1 Plate or Float	—	—	1	37	—
2$^3/_4$ Insulated glass	$^1/_4$	2 Air space	$^1/_2$	39	—
1 Laminated Insulated glass	$^1/_4$	$^1/_2$ Air space	$^1/_8$ plus $^1/_8$	41	32

Transmission loss (dB)															
Frequency (Hz)															
125	160	200	250	315	400	500	630	800	1000	1250	1600	2000	2500	3150	4000
$^1/_4$ in. plate glass – 31 STC; 29 OITC															
25	25	24	28	26	29	31	33	34	34	35	34	30	27	32	37
1 in. insulating glass with $^1/_2$ in. air space – 35 STC; 28 OITC															
24	29	22	22	25	30	33	35	38	40	42	42	37	37	43	46
1 in. insulating glass laminated with $^1/_2$ in. air space – 39 STC; 31 OITC															
17	28	29	33	34	38	40	40	41	41	41	41	40	43	49	54

glass performance cannot solely be relied on to reduce sound transmission to the building interior. The sound transmission of the window framing will result in higher levels of sound transmission through the glass and wall. Also, window-framing systems that allow greater amounts of air infiltration also allow greater sound transmission.

STC is not necessarily the best performance specification for windows as it is often a poor predictor of sound insulation for low frequency sources, such as mechanical system or transportation noise. The OITC (Outdoor-Indoor Transmission Class) rating system based on ASTM E 1332 is relatively new, and it was designed to assess a building façade element, such as a window, when exposed to a standard spectrum of low frequency air and truck transportation noise ranging from 80 to 4000 Hz (see ASTM Guide E 966). Therefore, it is a better measure of a window system's performance than STC, especially when traffic noise is the principal concern. The numeric value representation of OITC tends to be lower than the STC rating.

There are many options available for acoustical glazing, so it is important to make the right choice—especially if the building is exposed to significant exterior noise and the interior spaces are noise sensitive. The use of double-pane insulating glass is not adequate for many projects. Even single- or double-laminated insulating glass may not be adequate, especially at low outside temperatures, where regular PVB-laminated glass will yield a performance similar to that of non-laminated glass.

The sound-transmission loss through a door depends on the material and construction of the door and the effectiveness of the seal between the door and its frame. There is a mass law dependence of STC on weight (psf) for both wood and steel doors. The approximate relationships are:

For steel doors: STC = 15 + 27 log W

For wood doors: STC = 12 + 32 log W

where W = weight of the door, psf.

These relationships are purely empirical and a large deviation can be expected for any given door. ASTM E 1408 can be used to determine the acoustical performance of doors.

For best results, the distances between adjacent door and/or window openings should be maximized, staggered when possible, and held to a minimum area. Minimizing openings allows the wall to retain the acoustical properties of the precast concrete. The design characteristics of the door or window systems must be analyzed prior to specification. Such qualities as frame design, door construction, and glazing thickness are vital performance criteria. Installation procedures must be exact and care should be given to the framing of each opening. Gaskets, weatherstripping, and raised thresholds serve as both thermal and acoustical seals and are recommended.

Figure 5.5.8 can be used to calculate the effective acoustic isolation of a wall system that contains a composite of elements, each with known individual transmission loss data (TL). (For purposes of approximation, STC values can be used in place of TL values.)

Example: Composite Wall Insulation Criteria

To complete the office building wall acoustical design from Section 5.5.6 assume the following:

1. The glazing area represents 10% of the exterior wall area.
2. The windows will be double glazed with a 40 STC acoustical insulation rating.

The problem now becomes the test of determining the combined effect of the concrete-glass combina-

Fig. 5.5.8 Chart for calculating the effective transmission loss of a composite barrier.

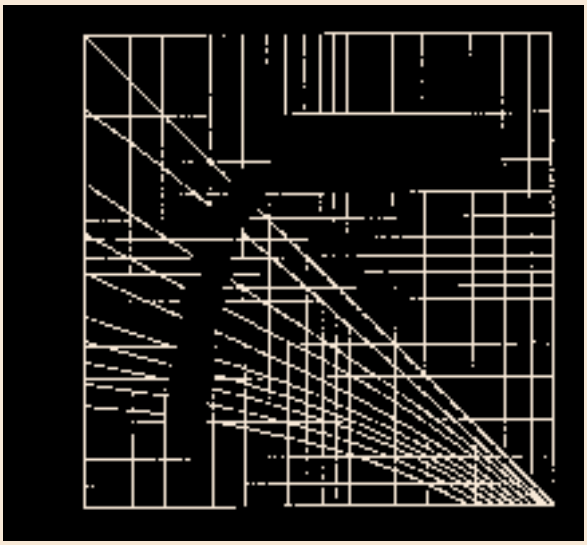

Decibels to be Subtracted from TL of Wall for Effective TL of Composite Barrier

Sound Pressure Level 3.

Sound Pressure Level – (dB)						
Frequency (Hz)	**125**	**250**	**500**	**1000**	**2000**	**4000**
6 in. precast solid concrete wall (Fig. 5.5.2)	38	43	52	59	67	72
Double-glazed windows (Table 5.5.5)	17	33	40	41	40	54
Correction (Fig. 5.5.8)	10	3	4	9	16	9
Combined transmission loss	28	40	48	50	51	63
Insulation requirements	31	40	38	38	34	29
Deficiencies	- 3	—	—	—	—	—

Note: 1 in. = 25.4 mm

tion and a re-determination of criteria compliance (see Sound Pressure Level 3).

The maximum deficiency is 3 dB and occurs at only one frequency point. The 6 in. (150 mm) precast concrete wall with double-glazed windows will provide the required acoustical insulation.

Floor-ceiling assembly acoustical insulation requirements are determined in the same manner as walls by using Fig. 5.5.2 and 5.5.8.

Fig. 5.5.9 Effect of safing insulation seals.

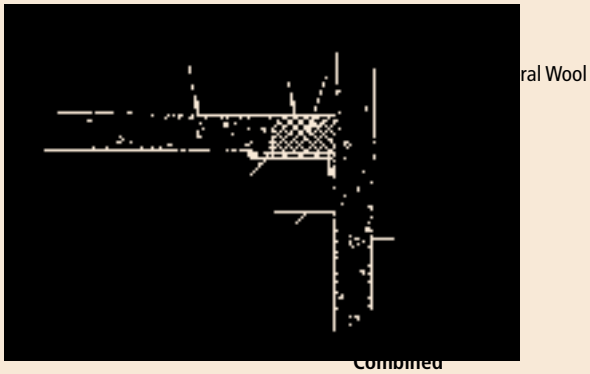

	Combined Trasmission Loss
No closure	14 STC
With steel bent plate closure	28 STC
With 4 in. thick safing insulation	30 STC
steel bent plate added	42 STC
With 6 in. thick safing insulation	38 STC
steel bent plate added	45 STC

5.5.8 Leaks and Flanking

Performance of a building section with an otherwise adequate STC can be seriously reduced by a relatively small hole (or any other path) that allows sound to bypass the acoustical barrier. All noise that reaches a space by paths other than through the primary barrier is called flanking noise. Common flanking paths are openings around doors or windows, electrical outlets, telephone and television connections, and pipe and duct penetrations. Suspended ceilings in rooms where walls do not extend from the ceiling to the roof or floor above also allow sound to travel to adjacent rooms by flanking.

Anticipation and prevention of leaks begins at the design stage. Flanking paths (gaps) at the perimeters of interior precast concrete walls and floors are generally sealed during construction with grout or drypack. All openings around penetrations through walls or floors should be as small as possible and must be sealed airtight. The higher the required STC of the barrier, the greater the importance of sealing all openings.

Perimeter leakage commonly occurs at the intersection between an exterior cladding panel and a floor slab. It is of vital importance to seal this gap to retain the acoustical integrity of the system and provide the required fire stop between floors. One way to seal the gap is to place a 4 pcf (64 kg/m^3) density mineral wool blanket between the floor slab and the exterior wall. Figure 5.5.9 demonstrates the acoustical isolation effects of this treatment. An enhancement to Fig. 5.5.9 would be to recess the insulation below the floor plane and fill the recess with smoke stop elastomeric sealant. Thereby improving not only the sound but the snoke resistance of the assembly.

Flanking paths can be minimized by:

1. Interrupting the continuous flow of energy with dissimilar materials, that is, expansion or control joints or air gaps.
2. Increasing the resistance to energy flow with floating floor systems, full height and/or double partitions, and suspended ceilings.
3. Using primary barriers, which are less subject to the creation of flanking paths. Although not easily quantified, an inverse relationship exists between the performance of an element as a primary barrier and its propensity to transmit flanking sound. In other words, the probability of existing flanking

paths in a concrete structure is much less than in a structure with steel or wood framing.

If the acoustical design is balanced, the maximum amount of acoustic energy reaching a space via flanking should not equal the energy transmitted through the primary barriers. In exterior walls, the proper application of sealant and backup materials in the joints between units will not allow sound to flank the wall.

5.6 DESIGN CONSIDERATIONS FOR BLAST RESISTANCE

5.6.1 General

In today's environment of enhanced risk some facilities require protective design and the management of risk of intentional and accidental explosions. There are many design options available to reduce the risk to any building.

The goal of protective design against the effects of blast is the protection of the building occupants and the reduction of casualties. Economically feasible design for antiterrorism/force protection (AT/FP) requires an integrated approach to facility siting, operation programming of interior spaces, and employment of active and passive security measures employing both technological and human security provisions. The architectural façade is one element of the protective design chain.

Designing a structure that could face a threat from a terrorist bombing that could originate either externally or internally to the structure requires finding the most effective way to meet the standards for enhanced safety that currently exist. This section only addresses external blasts. When designing protection for a building, owners and architects must work with structural engineers and blast consultants to determine the blast forces to withstand, as well as risk and vulnerability assessment, and protection levels. Optimally, blast mitigation provisions for a new building should be addressed in the early stages of project design to minimize the impact on architecture and cost. Defensive design often affects aesthetics, accessibility, fire safety regulations, and budgetary constraints.

The building's façade is its first real defense against the effects of an explosion. How the façade responds to blast loading will significantly affect the behavior of the structure. The need for comprehensive protection of occupants within the structure will likely cause window sizes to decrease in height and width, and increase in thickness. Attachments to windows and the panels themselves likewise will become more substantial. Considering the extent of surface area enclosing a building, even modest levels of protection will be expensive. As a result, the design philosophy might best be served by concentrating on the improvement of the post-damaged behavior of the façade. To protect the occupants to the highest degree, the aim should be for the building and its cladding components to remain standing or attached long enough to protect occupants from injury or death resulting from flying debris and to evacuate everyone safely.

Several types of hazards can affect the building systems (structural or architectural). These hazards can be subdivided into two general categories: man-made (blast) and natural (earthquakes, wind, etc). For a successful approach to any system design, it is essential to understand the nature of the hazard. Dynamic hazards can be described by their relative amplitudes and relative time (frequency) attributes. Figure 5.6.1 shows a schematic representation of the amplitude-frequency relationships of several dynamic hazards.

It is important to emphasize the principal differences between static, dynamic, and short-duration dynamic loads. Typically, static loads do not produce inertia effects in the structural response, are not time dependent, and are assumed to act on the structure for long periods of time (gravity loads, for example). Dynamic loads, such as those induced by earthquake or wind gusts, have strong time dependencies and their typical durations are measured in tenths of seconds. Short-

Fig. 5.6.1 Qualitative amplitude-frequency distribution for different hazards

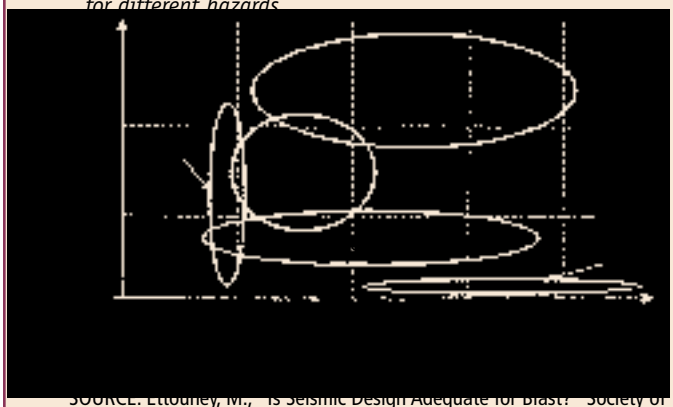

SOURCE: Ettouney, M., "Is Seismic Design Adequate for Blast?" Society of American military Engineers National Symposium on Comprehensive Force Protection, Charleston, S.C., November 2001.

duration dynamic loads, such as those induced by explosions or debris impact, are non-oscillatory pulse loads, and their duration is about 1000 times shorter than the duration of typical earthquakes. Structural response under short-duration dynamic effects could be significantly different than the much slower loading cases, requiring the designer to provide suitable structural details. Therefore, the designer must explicitly address the effects related to such severe loading conditions, in addition to the general principles used for structural design to resist conventional loads. As a starting point, the reader should review background material on structural considerations and design in the references in the Blast Analyses Standards section.

There are conflicting hazard demands on cladding relating to the weight or mass of a typical wall. For a seismic hazard, the forces on the wall are directly proportional to its mass. Forces that are produced from a blast hazard are more generally inversely proportionate to the mass of the cladding. In some panel configurations, increasing the mass of the panel can provide improvements in the response of the panel to a defined level of blast loading. This produces a dilemma for the designer: higher mass would be beneficial in a blast condition, but be harmful in an earthquake condition. Obviously, an optimization or balanced design is needed in such a situation, with the understanding that both hazards require ductile behavior from the cladding and connections. However, the manner the cladding-structure interacts when subjected to each of the two hazards is completely different. During earthquakes, the movement of the structure will impose forces on the cladding. During a blast event, the cladding would impose reactions (through the connections) on the structure.

Fig. 5.6.2 Qualitative pressure-time history.

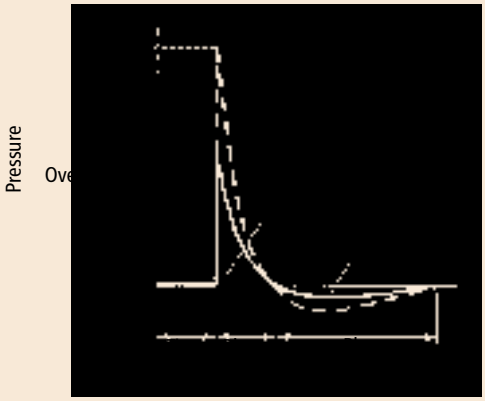

SOURCE: "Structures to Resist the Effects of Accidental Explosions," TM 5-1300. November, 1990.

5.6.2 Blast Basics

An explosion is a very rapid release of stored energy characterized by an audible blast. Part of the energy is released as thermal radiation, and part is coupled into the air (air-blast) and soil (ground-shock) as radially expanding shock waves. Air-blast is the principal damage mechanism. Air-blast phenomena occur within milliseconds and the local effects of the blast are often over before the building structure can globally react to the effects of the blast. Also, initial peak pressure intensity (referred to as overpressure) may be several orders of magnitude higher than ambient atmospheric pressure. The overpressure radiates from the point of detonation but decays exponentially with distance from the source and time and eventually becomes negative (outward-rushing force), subjecting the building surfaces to suction forces as a vacuum is created by the shock wave (Fig. 5.6.2). In many cases, the effect of the negative phase is ignored because it usually has little effect on the maximum response. The maximum impulse delivered to the structure is the area under the positive phase of the reflected pressure-time curve. Both the pressure and impulse (or duration time) are required to define the blast loading.

The shape of the building can affect the overall damage to the structure. For example, U- or L-shaped buildings may trap the shock wave, which may increase blast pressure locally because of the complex reflections created. Large or gradual re-entrant corners have less effect than small or sharp re-entrant corners. In general, convex rather than concave shapes are preferred for the exterior of the building. The reflected pressure on the surface of a circular building is less intense than on a flat building. The extent of damage depends on the yield or charge weight (measured in equivalent pounds of TNT), the relative position of the explosive device, and the design details. The shock waves compress air molecules in its path, producing overpressure. When the shock waves encounter the building surfaces, they are reflected, amplifying the overpressure so that it is higher than the initial peak pressure. Blast load pressures can greatly exceed wind and seismic design loads. Therefore, it is typically costly for these buildings to be designed to withstand a large explosion in or very near the building.

A secondary effect of the air blast is dynamic pressure or drag loading, which is a very high velocity wind. It propels the debris generated by the air blast, creating secondary projectiles. Also, the building is subject to the ground-shock, which produces ground motions sometimes similar to a short duration earthquake.

The response of a building to a large explosion occurs in distinct phases. Initially, as the blast wave contacts the nearest exterior wall of the building, windows may be shattered, and the walls and columns deflect under the reflected pressure. If the blast intensity is greater than that designed for, the wall eventually deforms inelastically and suffers permanent displacement or collapse. The internal pressure exerts a downward and upward pressure on the floor slabs, depending on the expected performance of the façade in the blast. If the façade remains intact during a blast event this limits the propagation of the blast pressures within the building. The upward pressure on the building floor is important because columns and slabs are not ordinarily designed for such loads. As the blast wave expands and diffracts around the building, it exerts an overpressure on the roof, side walls and, finally, on the walls of the far side (Fig. 5.6.3). Although the pressure levels on the three sides facing away from the blast are smaller than those on the front, they are significant. Since the location of the explosion cannot be anticipated, each building face must be designed for the worst case, that is, an explosion normal to that face. Internal pressure may be reduced by decreasing the size and number of openings or by using blast resistant glazing assemblies and doors.

Fig. 5.6.3 Blast loading

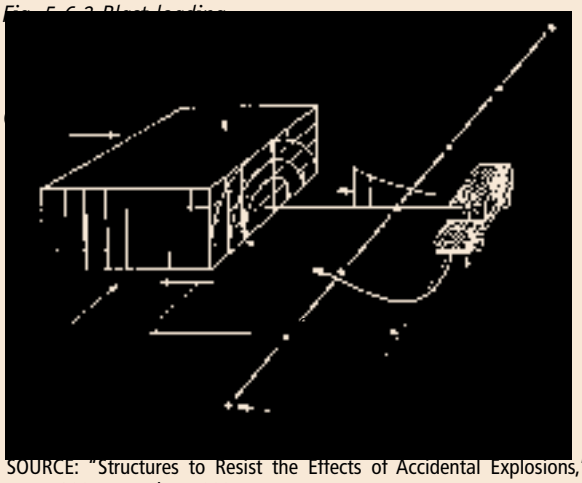

SOURCE: "Structures to Resist the Effects of Accidental Explosions," TM5-1300. November, 1990.

Blast characteristics are very different in open air versus confined spaces. For example, parking structures have varying degrees of openness or vent area and the blast response will be very structure-specific. Confined and contained explosions produce very complex pressures within and exiting from the structure. Confined explosions include a reflected shockwave phase. The reflected shockwave phase is similar to an open-air blast except that it is much more complex due to reverberation off of various surfaces in the structure. A second loading phase is a quasi-static pressure pulse caused by the overpressure settling to a slowly decaying level. The overpressure is dependent on the charge-weight-to-enclosing room-volume ratio for its peak value and depends on the vented area of the enclosure for its decay characteristics. The result of these phases is a much longer lasting and potentially more damaging pressure being applied to the structure.

5.6.3 Blast Analyses Standards

All building components requiring blast resistance should meet the criteria required for GSA or DOD facilities and be designed using established methods and approaches for determining dynamic loads and dynamic structural response. Design and analysis approaches should be consistent with those in the technical manuals below:

1. U.S. Departments of the Army, Navy, and Air Force, "Structures to Resist the Effects of Accidental Explosions," Revision 1 (Department of the Army Technical Manual TM 5-1300, Department of the Navy Publication NAVFAC P-397, Department of the Air Force Manual AFM 88-22), Washington, DC, November 1990. A CD version of this manual can be obtained from the Department of Defense Explosive Safety Board (Phone: 703-325-8624). Hard copies should be requested from the Defense Technical Documentation Center. (This reference, in combination with Con Wep software, guides designers in the calculation of the pressure and related information necessary to perform an analysis for the structure.) Contact David Hyde, U.S. Army Engineer Research and Development Center, 3909 Halls Ferry Road, Vicksburg, Mississippi 39180, or via email at HydeD@wes.army.mil.
2. Conventional Weapons Effects (CONWEP); Request through U.S. Army Engineer Research and Development Center, 3909 Halls Ferry Road, Vicksburg, MS 39180; Contact David Hyde, email

at HydeD@wes.army.mil. Restricted distribution. In general, federal contractors should have their government program officer contact Mr. Hyde.

3. UFC 3-340-01, June 2002, "Design and Analysis of Hardened Structures to Conventional Weapon Effects (DAHS);" (supersedes Army TM 5-855-1/ AFPAM 32-1147(I)/ NAVFAC P-1080, and DAHSCWEMAN-97). For official use only and may be obtained by government contractors through government program officers.
4. Unified Facilities Criteria (UFC) 4-010-10, DoD Minimum Antiterrorism Standards For Buildings. This is for official use only and may be obtained by government contractors through a government program officer. This document will provide design charge weights for specific building categories and applicable level of protection.
5. U.S. Department of the Army, Security Engineering, TM 5-853 and Air Force AFMAN 32-1071, Volumes 1, 2, 3, and 4; Washington, DC, Departments of the Army and Air Force, 1994.
6. Air Force Engineering and Services Center, "Protective Construction Design Manual," ESL-TR-87-57. Prepared for Engineering and Services Laboratory, Tyndall Air Force Base, FL., November 1989.
7. U.S. Department of Energy, "A Manual for the Prediction of Blast and Fragment Loadings on Structures," Revision 1, DOE/TIC 11268. Washington, DC, Headquarters U.S. Department of Energy, July 1992. The manual is published by the U.S. Department of Energy, Albuquerque Operations Office, and is available from the Department of Defense Technical Information Center.
8. Unified Facilities Criteria, DoD Minimum Antiterrorism Standards for Buildings, UFC 4-010-01, U.S. Department of Defense, October 8, 2003. To obtain a copy go to www.wbdg.org/references/pa_dod.php and click on "UFC Documents." To insure they are current, copies are distributed only in electronic media versions.
9. Interim Antiterrorism/Force Protection Construction Standards—Guidance on Structural Requirements (DRAFT), U.S. Department of Defense, March 5, 2001.

It is likely that to design against blast will require a comprehensive knowledge of explosive effects and fortification sciences, such as described in the DAHSCWEMAN (1998), in Technical Manual (TM) 5-855-1 (U.S. Department of the Army 1998), and in the Tri-Service manual (TM 5-1300, U.S. Departments of the Army, Navy, and Air Force, 1990). The electronic version of the DAHSCWEMAN manual will greatly assist designers in applying blast design concepts.

The report "Structural Design for Physical Security: State of the Practice," prepared by the Structural Engineering Institute Task Committee, Edward J. Conrath, et al, American Society of Civil Engineers (1999), also addresses the design of structures to resist the effects of terrorist bombings. It provides guidance for structural engineers charged with designing for blast resistance of civil facilities.

5.6.4 Determination of Blast Loading

Currently there are no formal blast performance criteria for civilian buildings. The U.S. Department of Defense, Department of State, and General Services Administration have developed specific antiterrorism requirements for military, embassy, and federal buildings, respectively. However, for security reasons, key portions of these criteria are only available to designers of specific projects to which they apply. Table 5.6.1 provides some recommendations for private-sector facilities. In all cases the designer's goal is to balance the nature and probability of each threat with the additional costs of protecting against it.

The key aspect of structural design to resist blast effects and progressive collapse is determining the nature and magnitude of the blast loading. This involves assessing the amount and type of explosive as well as its distance from the building. Another factor is the level of security that can be placed around the building to prevent or mitigate exposure to an explosive event.

The design vehicle weapon size that is considered will usually be much smaller than the largest credible threat, measured in the hundreds of pounds rather than the thousands of pounds of TNT equivalent. The decision regarding the blast design criteria for a particular building is usually based on a trade-off between the largest credible attack directed against the building and the design constraints of the project. Further, the design pressures and impulses may be less than the actual peak pressures and impulses may be less than the actual peak pressures and impulses acting on the building. This is the general approach that the federal government has taken in its design criteria for federally owned domestic office buildings.

Table 5.6.1 Recommended Antiterrorism Design Criteria (Conrath et. al.).

Tactic	Parameter	Estimated Likelihood of Terrorist Attack				Measurement of Standoff Distance R
		Low	Medium	High	Very High	
Vehicle Bomb	Vehicle Size* (lbs GVW)	4,000	4,000	5,000	12,000	Controlled Perimeter, Vehicle Barrier, or Unsecured Parking/Road
	Charge Size W (lbs TNT)	50	100	500	2,000	
Placed Bomb	Charge Size W (lbs TNT)	0	2	100	100	Unobstructed Space or Unsecured Parking / Road
Standoff Weapon	Charge Size W (lbs TNT)	2	2	50	50	Neighboring Structure

* For barrier design, with maximum velocity based on site configuration.

SOURCE: Schmidt, Jon A., "Structural Design for External Terrorist Bomb Attacks," NCSEA, Structure magazine (www.structuremag.org), March, 2003.

The total dynamic pressure (in psi) and the positive phase duration (in milliseconds) are found using TNT equivalents (the equivalent weight of the explosive in TNT = W) and the distance from the blast (R). To calculate blast loads, the blast must be scaled. Similar blast waves are produced at identical scaled distances when two explosive charges of similar geometry and of the same explosive, but of different sizes, are detonated in the same atmosphere. The scaled distance parameter Z (ft per lb TNT equivalent) is: $Z = \frac{R}{W^{1/3}}$

With the scaled distance in the correct units, published curves can be used to find the total dynamic pressure and the positive phase duration.

Although the angle of incidence at which a blast wave strikes the building surface also influences these parameters, it is usually conservative to neglect this adjustment. Either way, in order to obtain the blast load, a number of different tools can be used. Tables of pre-determined values may be used (see GSA Security Reference Manual: Part 3 – Blast Design & Assessment Guidelines, July 31 2001) or computer programs can perform these calculations and provide much greater accuracy. One such software product, AT-Blast, is available for downloading free of charge from the U.S. General Services Administration (www.oca.gsa.gov or www.araseas.com). Designers of government projects may request Con Wep, another software product, through the agency that they have a contract with. Con Wep is a collection of conventional weapons effects calculations from the equations and curves of TM 5-855-1. Users should be thoroughly familiar with TM 5-855-1 before using this program as a design tool.

Although the actual blast load on an exposed element will vary over its tributary area, for design the maximum dynamic load is typically taken as the product of this area and either the maximum pressure or a spatially averaged value. This is analogous to the manner in which design wind loads for components and cladding are routinely calculated. Blast loads need not be factored since they already represent an ultimate design condition.

5.6.5 Blast Effects Predictions

After the blast load has been predicted, damage levels may be evaluated by explosive testing, engineering analysis, or both. Often, testing is too expensive an option for the design community and an engineering analysis is performed instead. To accurately represent the response of an explosive event, the analysis needs to be time dependent and account for non-linear behavior.

Non-linear dynamic analysis techniques are similar to those currently used in advanced seismic analysis. Analytical models range from equivalent single-degree-of-freedom (SDOF) models to finite element (FEM) representation. In either case, numerical computation requires adequate resolution in space and time to account for the high-intensity, short-duration loading and non-linear response. The challenges are principally the selection of the model, the anticipated appropriate failure modes, and the interpretation of results for structural design details. Whenever possible, results are checked against data from tests and experiments on similar structures and loadings. Available computer

programs include:

- AT Planner (U.S. Army Engineer Research and Development Center)
- BEEM (Technical Support Working Group)
- BLASTFX (Federal Aviation Administration)

Components such as beams, slabs, or walls can often be modeled by a SDOF system and the governing equation of motion solved by using numerical methods. There are also charts developed by J. M. Biggs in *Introduction to Structural Dynamics* (McGraw-Hill Publishing Company, 1964) and military handbooks for linearly decaying loads, which provide the peak response and circumvent the need to solve differential equations. These charts require only knowledge of the fundamental period of the element, its ultimate resistance force, the peak pressure applied to the element, and the equivalent linear decay time to evaluate the peak displacement response of the system. The design of the anchorage and supporting structural system can be evaluated by using the ultimate flexural capacity obtained from the dynamic analysis. Other charts are available that provide damage estimates for various types of construction based on peak pressure and peak impulse based on analysis or empirical data. Military design handbooks typically provide this type of design information.

For SDOF systems, material behavior can be modeled using idealized elastic, perfectly plastic, stress-deformation functions, based on actual structural support conditions and strain-rate–enhanced material properties. The model properties are selected to provide the same peak displacement and fundamental period as the actual structural system in flexure. Furthermore, the mass and the resistance functions are multiplied by mass and load factors, which estimate the actual portion of the mass or load participating in the deflection of the member along its span.

For more complex elements, the blast consultant must resort to finite-element numerical time integration techniques. The time and cost of the analysis must be considered when choosing design procedures. SDOF models are suitable for numerical analysis on PCs, but the most sophisticated FEM systems (with non-linear material models and options for explicit modeling of reinforcing bars) may require significant computing power. Because the design analysis process is a sequence of iterations, the cost of analysis must be justified in terms of benefits to the project and increased confidence in the reliability of the results. In some cases, an SDOF approach will be used for the preliminary design and a more sophisticated approach, using finite elements, will be used for the final verification of the design.

A dynamic non-linear approach is more likely than a static approach to provide a panel cross section that meets the design constraints of the project. Elastic static calculations are likely to give overly conservative design solutions if the peak pressure is considered without the effect of load duration. By using dynamic calculations instead of static, it is possible to account for the very short duration of the loading. Because the peak pressure levels are so high, it is important to account for the short duration of the loading to properly model the structural response. In addition, the inertial effect included in dynamic computations greatly improves the accuracy of the calculated response. This is because by the time the mass is mobilized, the loading is greatly diminished, enhancing response. Furthermore, by accepting that damage occurs it is possible to account for the energy absorbed by ductile systems through plastic deformation. Finally, because the loading is so rapid, it is possible to enhance the material strength to account for high strain-rate effects.

Both concrete and reinforcing steel subjected to the very short duration impulse type loading caused by a blast exhibit a higher strength than when subjected to a static loading. The stiffness and strength of both steel reinforcement and concrete are likely to increase with the higher rate of loading under blast conditions. This obviously increases the strength of reinforced concrete members, which translates into higher dynamic resistance. But the high rate of loading expected during blasts is also likely to significantly reduce the deformation capacity and the fracture energy of reinforced concrete. This translates into reduction of ductility of reinforced concrete in blast loading situations.

In dynamic non-linear analysis, response is evaluated by comparing the ductility (that is, the peak displacement divided by the elastic limit displacement) and/or support rotation (the angle between the support and the point of peak deflection) to empirically established maximum values that have been established by the military through explosive testing. Note that these values are typically based on limited testing and are not well defined within the industry at this time. Maximum permissible values vary, depending on the material and the acceptable damage level.

If static design methods are used, it is recommended that an equivalent static pressure be used rather than the peak air-blast pressure. The peak air-blast pressure generally leads to over-designed sections that are not cost effective, add weight to the structure, and are difficult to construct.

Specifications for precast concrete elements can be either in the form of a performance requirement, with the air-blast pressures and required performance provided, or as a prescriptive specification with equivalent static pressures provided. The equivalent static pressures are computed based on the peak dynamic response of the panel for the defined threat. The performance specifications give precasters more flexibility to provide the systems with which they are most familiar. However, it requires that the precaster either have in-house dynamic analysis capability or have a relationship with a blast engineer who can work with him or her to customize the most cost-effective system.

On the other hand, as static equivalent pressures are based on the specific panel's response to the air-blast load, changing dimensions, reinforcement, or supported elements would require recalculation of the static equivalent load and are therefore not recommended when static equivalent pressures are given as part of the panel design criteria. However, when using the static equivalent loads, the designer may proceed normally with the lateral design process, using a load factor of one.

Note that equivalent static values are different from quasi-static values that assume a displacement ductility of less than one. The equivalent static values are based on computations that are non-linear, with ductilities in excess of one.

Levels of damage computed by means of analysis may be described by the terms minor, moderate, or major, depending on the peak ductility, magnitude of support rotation, and collateral effects. A brief description of each damage level is given below.

Minor: Nonstructural failure of building elements such as windows, doors, curtain walls, and false ceilings. Injuries may be expected, and fatalities are possible but unlikely.

Moderate: Structural damage is confined to a localized area and is usually repairable. Structural failure is limited to secondary structural members such as beams, slabs, and non-loadbearing walls. However, if the building has been designed for loss of primary members, localized loss of columns may be accommodated. Injuries and some fatalities are expected.

Major: Loss of primary structural components such as columns or transfer girders precipitates loss of additional adjacent members that are adjacent to or above the lost member. In this case, extensive fatalities are expected. Building is usually not repairable.

Generally, moderate damage at the design threat level is a reasonable design goal for new construction for which design of blast effects has been specified.

Table 5.6.2 Damage Approximations.

Damage	Incident Overpressure (psi)
Typical window glass breakage	0.15 – 0.22
Minor damage to some buildings	0.5 – 1.1
Panels of sheet metal buckled	1.1 – 1.8
Failure of concrete block walls	1.8 – 2.9
Collapse of wood framed buildings	Over 5.0
Serious damage to steel framed buildings	4 – 7
Severe damage to reinforced concrete structures	6 – 9
Probable total destruction of most buildings	10 – 12

SOURCE: Explosive Shocks in Air, Kinney & Grahm, 1985; Facility Damage and Personnel Injury from Explosive Blast, Montgomery & Ward, 1993; and The Effects of Nuclear Weapons, 3rd Edition, Glasstone & Dolan, 1977

Figure 5.6.4 provides a quick method for predicting the expected overpressure (expressed in psi) on a building for a specific explosive weight and standoff distance. Enter the x-axis with the estimated explosive weight a terrorist might use and the y-axis with a known standoff distance from a building. By correlating the resultant effects of overpressure with other data, the degree of damage that the various components of a building might receive can be estimated. The vehicle icons in Fig. 5.6.4 and 5.6.5 indicate the relative size of the vehicles that might be used to transport various quantities of explosives.

Figure 5.6.5 shows an example of a range-to-effect chart that indicates the distance or standoff to which

a given bomb size will produce a given effect. This type of chart can be used to display the blast response of a building component or window at different levels of protection. It can also be used to consolidate all building response information to assess needed actions if the threat weapon-yield changes. For example, an amount of explosives are stolen and indications are that they may be used against a specific building. A building-specific range-to-effect chart will allow quick determination of the needed standoff for the amount of explosives in question, after the explosive weight is converted to TNT equivalence.

5.6.6 Standoff Distance

Protection for a commercial building, which comes in active and passive forms, will impact the potential damage sustained by the building and the rescue efforts of the emergency workers. The primary approach is to create a standoff distance that ensures a minimum guaranteed distance between the blast source and the target structure. The standoff distance is vital in the design of blast resistant structures since it is the key parameter that determines, for a given bomb size or charge weight, the blast overpressures that load the building cladding and its structural elements. The blast pressure is inversely proportional to the cube of the distance from the blast to the point in question. For example, if the standoff distance is doubled the peak blast pressure is decreased by a factor of eight (Fig. 5.6.6). Furthermore, for a similar charge weight, the greater standoff distance results in a slightly longer loading duration than the shorter standoff distance, and the blast wave is more uniformly distributed across the building face. Currently design criteria for standoff distances for blast protection vary from 33 to 148 ft (10 to 45 m) depending on the function of the building. This standoff distance, or setback zone, is achieved by placing anti-ram bollards,

Fig. 5.6.4 Incident overpressure measured in pounds per square inch, as a function of stand-off distance and net explosive weight (pounds-TNT).

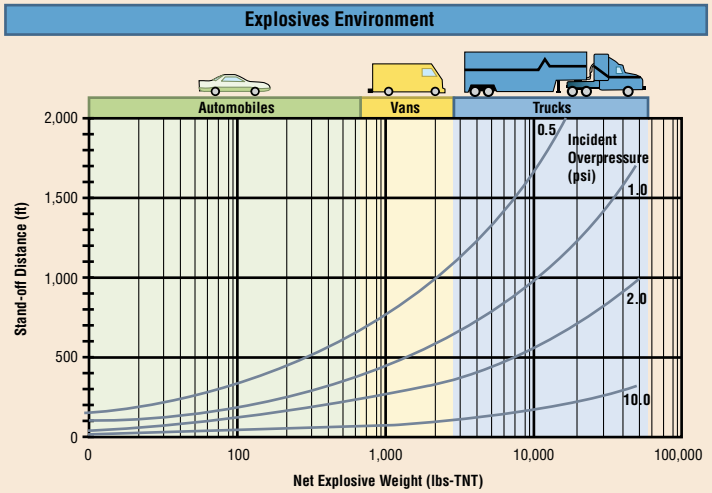

Source: Federal Emergency Management Agency. Reference Manual to Mitigate Potential Terrorist Attacks. FEMA 426 (Washington, DC: Federal Emergency Management Agency, December 2003).

Fig. 5.6.5 Explosive environments – blast range to effects.

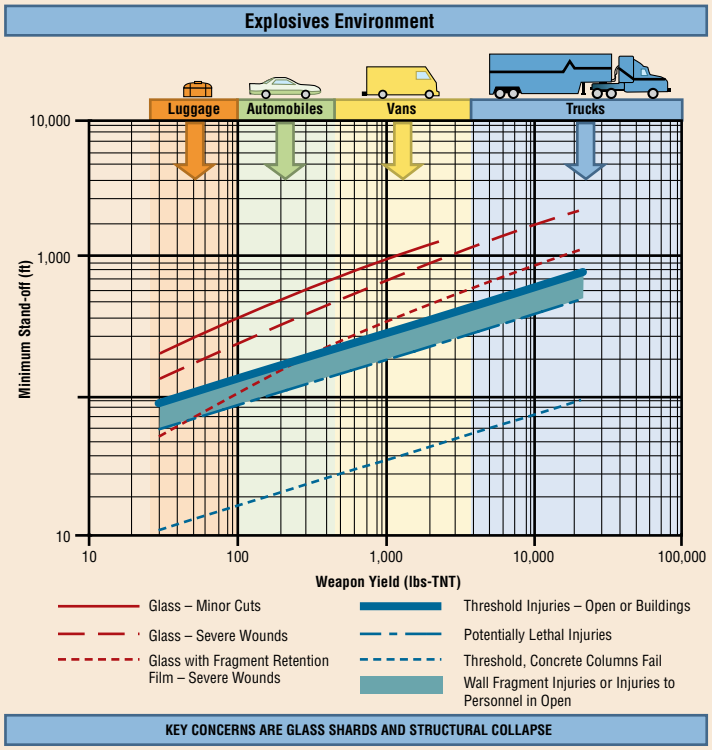

Source: Federal Emergency Management Agency. Reference Manual to Mitigate Potential Terrorist Attacks. FEMA 426 (Washington, DC: Federal Emergency Management Agency, December 2003).

*Fig. 5.6.6 Pressure vs. Range-Hemispherical Surface Burst.**

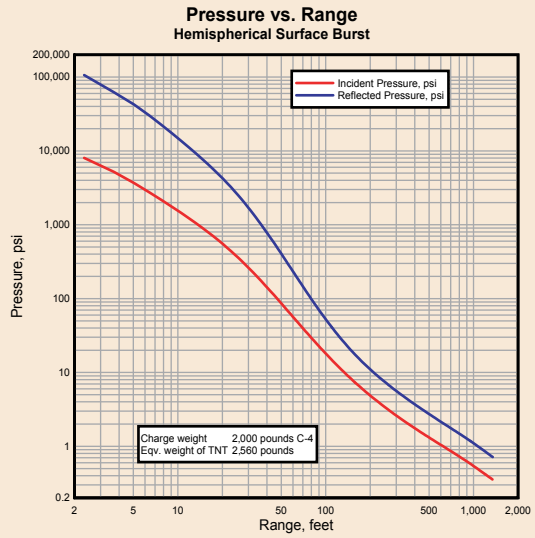

*Bridge and Tunnel Vulnerability Workshop, U.S. Army Engineer Research and Development Center, Vicksburg, MS, May 13-15, 2003.

large planters, low-level walls, fountains, and other barriers that cannot be compromised by vehicular ramming at the site perimeter (Fig. 5.6.7). The anti-ram capability should be consistent with the size of the weapon and the maximum achievable velocity of the ramming vehicle (up to 50 mph [80.5 km/hr]). In urban areas, the setback choices are limited. In suburban or rural areas, large setbacks around a building can be used by existing infrastructure.

The maximum ramming vehicle speeds attainable will be determined by the site conditions; therefore, the site conditions will determine the vehicle kinetic energy resulting from an impact that must be resisted by the standoff barriers. Both the bollard and its slab connection must be designed to resist the impact loading at the maximum speed attainable. Conversely, if design restrictions limit the capacity of the bollard or its slab connection, then site restrictions will be required to limit the maximum speed attainable by the potential bomb delivery vehicle.

Fig. 5.6.7 Barriers to achieve standoff distance and limit vehicle access.

Nimitz-MacArthur Pacific Command Center, Oahu, Hawaii; Architect: Wimberly Allison Tong & Goo Design; Photo: Gary Hofheimer Photography.

While the setback zone is the most effective and efficient measure to lessen the effect of a terrorist vehicle bomb attack, it also can work against rescue teams since the barriers could deter access to the rescue and firefighting vehicles. In most urban settings, the typical setback distance from the street to the building façade is typically 10 to 25 ft (3 to 7.5 m), which does not pose any access problems for emergency vehicles. However, when designing prestigious buildings, including landmark office towers, hospitals, and museums, the setback is often increased to 100 ft (30.5 m) or more to create a grand public space. Details to allow emergency access should be included in the design of operational bollards or fences. If plaza or monumental stairs are used, some secondary access must be incorporated to similarly allow emergency response entry. Furthermore, public parking lots abutting the protected building must be secured or eliminated, and street parking should not be permitted adjacent to the building. Additional standoff distance can be gained by removing one lane of traffic and turning it into an extended sidewalk or plaza. However, the practical benefit of increasing the standoff depends on the charge weight. If the charge weight is small, this measure will significantly reduce the forces to a more manageable level. If the threat is a large charge weight, the blast forces may overwhelm the structure despite the addition of 9 or 10 ft (2.5 to 3 m) to the standoff distance, and the measure may not significantly improve survivability of the occupants or the structure.

Figures 5.6.6 and 5.6.8 illustrate the effect of increased standoff distances on the pressures that would be created on the structure.

Even where the minimum standoff distances are achieved, many aspects of building layout and other architectural design issues must be incorporated to improve overall protection of personnel inside buildings.

5.6.7 Design Concepts

Several important concepts should be kept in mind while designing buildings for blast resistance. These concepts include energy absorption, safety factors, limit states, load combinations, resistance functions, structural performance considerations, and, most importantly, structural redundancy to prevent progressive collapse of the building. A design satisfying all required strength and performance criteria would be unsatisfactory without redundancy.

Structures with three or more stories are more likely to be subject to significant damage as a result of progressive collapse. The engineer of record needs to design the structure to sustain local damage with the structural system as a whole remaining stable and not being damaged to an extent disproportionate to the original localized damage. This is achieved through structural elements that provide stability to the entire structural system by transferring loads from any locally damaged region to adjacent regions capable of resisting those loads without collapse. Transfer girders and the columns supporting them are particularly vulnerable to blast loading because they support a significant portion of the building above. Unless specially designed, this form of construction poses a significant impediment to the safe redistribution of the load in the event the girder or the columns supporting it are damaged.

To limit the extent of collapse of adjacent components: (1) highly redundant structural systems are designed; (2) the structure is analyzed to ensure it can withstand removal of one primary exterior vertical or horizontal load-carrying element (a connection, column, beam, or a portion of a loadbearing/shear wall system) without progressive collapse; (3) connections are detailed to provide continuity across joints equal to the full structural capacity of connected members (see Article 16.5-Structural Integrity in *ACI 318*); (4) floors are designed to withstand load reversals due to explosive effects; and (5) exterior walls employ one-way wall elements spanning vertically to minimize blast loads on columns.

Strength and ductility (energy-dissipating capacity) are necessary to achieve high energy absorption, which is achieved through the use of appropriate structural materials and details. These details must accommodate relatively large deflections and rotation in order to provide redundancy in the load path. Elements with low ductility are undesirable for blast resistant design.

Margins of safety against structural failure are achieved through the use of allowable deformation criteria. Structures subjected to blast load are typically allowed to undergo plastic (permanent) deformation to absorb the explosion energy, whereas response to conventional loads is normally required to remain in the elastic range. The more deformation the structure or member is able to undergo, the more blast energy that can be absorbed. As member stresses exceed the yield limit, stress level is not appropriate for judging member response as is done for static elastic analysis. In dynam-

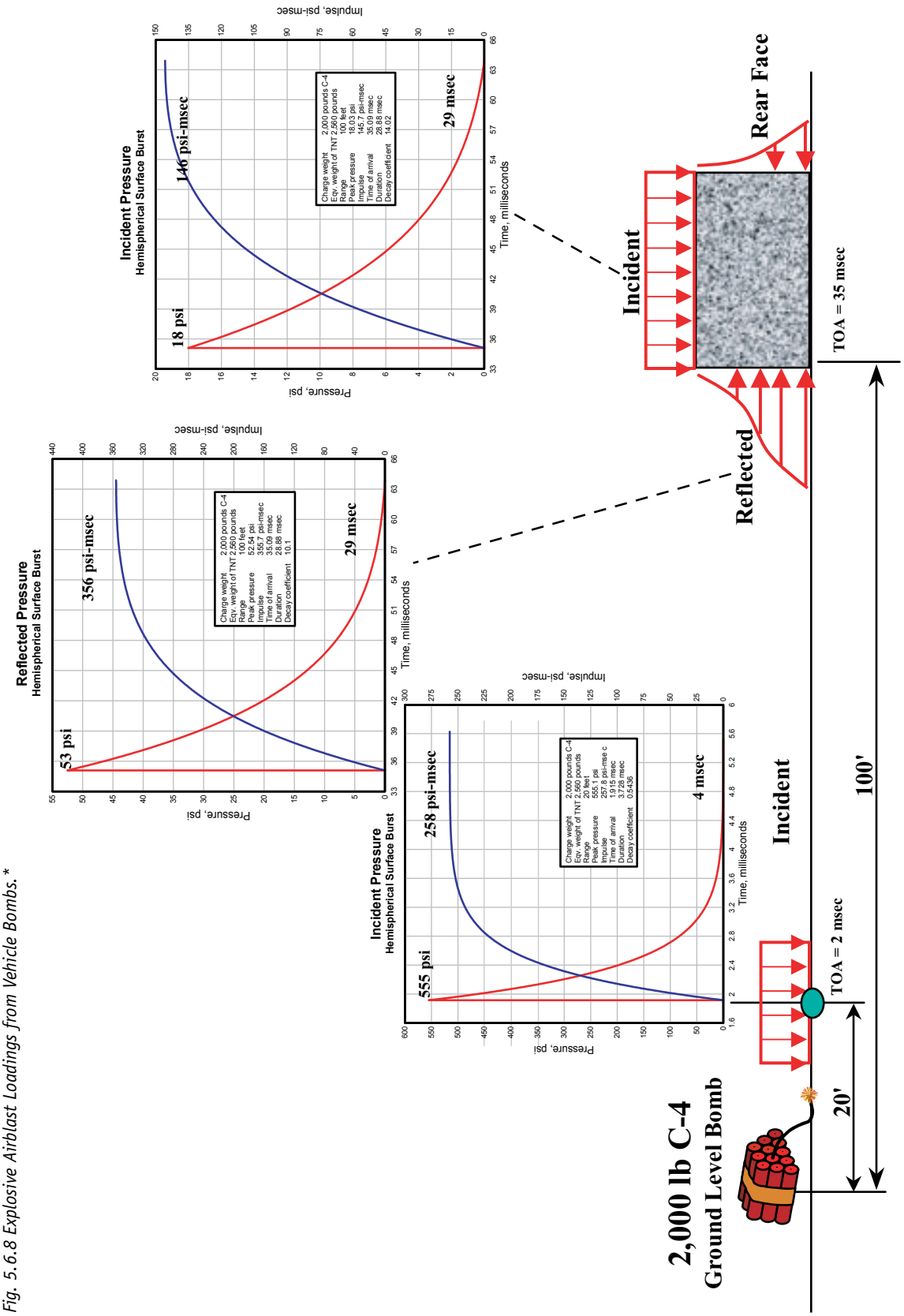

*Fig. 5.6.8 Explosive Airblast Loadings from Vehicle Bombs.**

*Bridge and Tunnel Vulnerability Workshop, U.S. Army Engineer Research and Development Center, Vicksburg, MS, May 13-15, 2003.

ic design, the adequacy of the structure is judged on maximum deformation capability. Limits on displacements are selected based on test data or other empirical evidence as well as blast probability and potential consequences. A degree of conservatism is included to ensure adequate capacity because the applied loads are not "factored up" to provide a factor of safety.

As long as the calculated deformations do not exceed the allowable values, a margin of safety against failure exists. Since the actual weight of the explosive charge is threat/risk based, the engineer cannot increase the design blast pressure loading and be assured of achieving a margin of safety. Blast-resistant design requires that the loads from blasts be quantified by risk analysis to determine the threat (charge weight) and that the structural performance requirements be established for buildings subjected to these derived loads. Methods to determine the blast loading and structural performance limits are established in TM 5-1300 for buildings exposed to explosions from TNT or other high-yield explosives in military applications and munitions plants. Typical threats for civilian structures vary from suitcase and backpack bombs (20 to 50 lbs [9 to 23 kg] TNT equivalent) to van or small truck bombs (3000 to 5000 lbs [1360 to 2267 kg] TNT equivalent). Generally, the larger charge sizes are associated with vehicles that can be kept farther from the building (60 to 100 ft [18 to 30.5 m]) by appropriately designed vehicle barriers.

Design codes contain special provisions for high seismic conditions, which may be used to address the requirements to design against progressive collapse associated with design for blast resistance. However, these provisions are not sufficient for blast design. These provisions are intended to protect against nonductile failure modes, such as buckling or premature crushing of brittle materials, through use of special detailing and design requirements. The desirable features of earthquake-resistant design (ductility, redundancy, and load redistribution) are equally desirable in blast design. The provision for seismic detailing, which maintains the capacity of the section despite development of plastic hinges, is also desirable for resisting the effects of blast. However, the highly localized loading from a blast and the potential for different mechanisms/failure modes requires some additional considerations. For blast effects, the engineer should design the panels so that the full capacity of the section will be realized and that no premature failure will occur.

Building codes define the load factors and combinations of loads to be used for conventional loading conditions such as dead, live, wind, and earthquake. However, no current building codes cover blast loading conditions. Blast loads are combined with only those loads that are expected to be present at the time of the explosion. Therefore, blast loads are not combined with earthquake or wind loads.

The Strength Design Method of ACI 318 may be used to extend standard concrete strength and ductility requirements to the design of blast resistant structures. The resistance of concrete elements subjected to high strain rates is computed using dynamic material strengths, which are typically 10 to 30% greater than static load strengths. Strength reduction or resistance factors are not applied ($\varnothing = 1.0$) to load cases involving blast. The plastic response used in blast design is similar in concept to the moment redistribution provisions in ACI 318, Section 8.4 and the seismic criteria provided in ACI 318, Chapter 21. The seismic detailing provisions are applied to provide the necessary ductile response.

In addition to ACI 318 requirements, the following items should be considered for blast resistant design:

1. The minimum reinforcing provisions of ACI 318 apply; however, the option to use one-third more reinforcing than computed should not be taken. The moment capacity of under-reinforced concrete members is controlled by the uncracked strength of the member. To prevent a premature ductile failure, reinforcing in excess of the cracking moment should be provided. Two-way, symmetric reinforcement is recommended to accommodate large deformations and rebound loads.

   For panels, the minimum reinforcement ratio (reinforcing steel cross-sectional area to the panel cross-sectional area) of vertical reinforcing steel should be equal to or greater than ACI 318 minimums required for Seismic Design Categories D, E, or F. If the risk potential for a blast is high, the minimum reinforcement ratio required for blast-resistant design (TM 5-855-1; DAHSCWEMAN 1998) should be used as a basis for design. Generally, for concrete walls 8 in. (200 mm) or greater in thickness, the recommended minimum reinforcing should be 0.25% each face. For concrete walls less than 8 in. (200 mm) thick, 0.5% as a single layer (on center line) of reinforcing should be the minimum specified.

2. Code provisions for maximum allowable reinforcing are included to prevent crushing of concrete prior to yielding of steel. Code provisions also allow compression reinforcing to offset maximum tension reinforcing requirements. Because blast resistant precast concrete panels typically have the same reinforcing on each face to resist rebound loads, maximum reinforcing provisions should not be a problem.
3. The substitution of higher grades of reinforcing should not be allowed. Grade 60 reinforcing bars (No. 11 [36] and smaller) have sufficient ductility for dynamic loading. Bars with high yield strength may not have the necessary ductility for flexural resistance and shop bending; straight bars should be used when possible for these materials. Welding of reinforcement is generally discouraged for blast design applications; however, in some instances it may be required for anchorage. In these cases, ASTM A706 bars may be used.
4. Development lengths should not be reduced for excessive reinforcement. Because plastic hinges will cause over-designed reinforcing to yield, the full actual strength of reinforcing should be used in computing section capacities. The development of reinforcing should be computed accordingly.
5. Criteria intended to reduce cracking at service load levels need not be applied to load combinations including blast. Cracking and permanent deformations resulting from a plastic range response are expected results of such an unusual type of load.
6. Some concrete elements are simultaneously subjected to out-of-plane bending loads in combinations with in-plane shear loads. For example, side walls must resist side overpressures acting into the plane of the side wall. Additionally, reactions from the roof diaphragm acting in the plane of the side shear wall must also be resisted.

5.6.8 Façade Considerations

A major structural consideration is the construction of the exterior façade. Second only to the impact the standoff distance has on the effects of the blast, the façade remains the occupants' last form of true protection. Not only does the building's skin protect the occupants from the weather, but it also has the potential to limit the blast pressure that can actually enter the workspace.

For a surface blast, the most directly affected building elements are the façade and structural members on the lower four stories. Although the walls can be designed to protect occupants, a very large vehicle bomb at small standoffs will likely breach any reasonably sized wall at the lower levels. There is a decrease in reflected pressure with height due to the increase in distance and angle of incidence of the air blast at the upper levels of a highrise building. Chunks of concrete spalled from panels by blast forces move at high speeds and are capable of causing injuries. Additional protection from fragment impact can be provided by steel backing plates, carbon fiber materials, or KEVLAR lining the interior of the wall; however, these are extreme measures that should be reserved for localized protection of high-value assets.

The building structure, architectural precast concrete cladding, and the window, window wall, and any curtain wall framing systems may be designed to adhere to the blast criteria within the Interagency Security Committee (ISC) "Security Design Criteria for New Federal Office Buildings and Major Renovation Projects," dated May 28, 2001, for the appropriate hazard level as determined by a threat consultant. By combining the criteria of the ISC with the applicable blast analysis standards mentioned earlier, the architectural precast concrete cladding systems should be sufficiently sized, reinforced, detailed, and installed to resist the required blast loading criteria on the panels if they were tested in accordance with the General Services Administration's (GSA) "Standard Test Method for Glazing and Window Systems Subject to Dynamic Overpressure Loadings" (GSA – TS01-2003). In addition to safely transferring the blast pressures into the supporting structure, the panels also must be checked for their capacity to transfer the additional loading caused by the specified window framing and the blast-resistant glass units.

5.6.9 Designing Precast Concrete Panels

Architectural precast concrete can be designed to mitigate the effects of a bomb blast and thereby satisfy GSA and DOD requirements. Rigid façades, such as precast concrete, provide needed strength to the building through in-plane shear strength and arching action. However, this strength usually is not taken into consideration in conventional design, as design requirements do not require those strength measures.

Panels are designed for dynamic blast loading rather than the static loading that is more typical. Precast concrete walls, being relatively thin flexural elements, should be designed for a ductile response (eliminating brittle modes of failure). There are tradeoffs in panel stiffness and the forces that must be reacted to by the panel connections that must be evaluated by the engineer. Typically, the panels should have increased section thickness or ribs on their back side and have as much as 75% additional reinforcement. But, the amount of flexural reinforcing should be limited to ensure that tensile reinforcing will yield before concrete crushing can occur. Shear steel may be used to increase shear resistance, confine the flexural reinforcing, and prevent buckling of bars in compression.

For precast concrete panels, designers should consider a minimum thickness of 5 in. (125 mm) exclusive of reveals, with two-way reinforcing bars spaced not greater than the thickness of the panel. For thin panels, where it is difficult to place two layers of reinforcement, the use of two layers of heavy welded wire reinforcement along the centerline or staggered bars on either face may be considered. These reinforcement details will improve ductility and reduce the chance of flying concrete fragments. The objective is to reduce the loads transmitted into the connections, which need to be designed to resist the loads associated with the ultimate flexural capacity of the panels.

Fig. 5.6.9 The 6 in. thick x 22 ft. tall panels were reinforced with ribs spaced 6 ft. apart.

Precast concrete panels are subject to horizontal loadings due to wind, earthquake, and blast and in-plane loads due to earthquakes. As a means of addressing these loads, they may be analyzed separately. This is a satisfactory design approach based on the International Building Code (IBC) load combinations.

Deep surface profiling of panels should be minimized; such features can enhance blast effects by causing complex reflections and lead to a greater level of damage than would be produced with a non-profiled façade.

To accommodate blast loading, the following features are commonly incorporated into precast concrete panel systems:

1. Increase panel size to at least two stories tall or one bay wide to increase the ductility. Panels can then absorb a larger portion of the blast energy and transfer less through connections to the main structure. Typically, the largest panel is analyzed for wind, seismic, and dead-loading and connections for all the panels are based on those results. But with bomb-blast criteria, the goal is to provide panels with the flexibility to bend, break, or crush while remaining essentially intact. As a result, often the smaller, less flexible panels in each group may be the critical components, and these are analyzed for loading instead.
2. Panels should be connected to floor diaphragms, rather than to columns, in order to prevent overstressing of the columns. The panels would then fail individually. When panels are connected to the floors rather than the columns, movement of any panel during erection causes the previously set and tied-back panel to lose alignment. The amount of deflection of the floor or beam varies with the panel's position on the floor or beam, requiring field estimates to determine how high to set each panel to allow for deflection caused by the adjacent panel.

Fig. 5.6.10
Lloyd D. George United States Courthouse, Las Vegas, Nevada; Architect: Dworsky Associates, Design Architect; Langdon Wilson Architects, Executive Architect; Photo: Langdon Wilson Architects.

3. Panels may be designed with integrally cast and reinforced vertical pilasters or ribs on the back to provide additional support and act as beams that span floor-to-floor to take loads (Fig. 5.6.9). This rib system makes the panels more ductile and better able to withstand an external blast. But it also forces the window fenestration into a "punched" opening symmetry. In addition, greater edge of slab clearances must be provided to accommodate the ribs.

Loadbearing precast concrete panels need to be designed to span over assumed failed areas by means of arching action, strengthened gravity connections, secondary support systems, or other means of providing an alternate load path. The precast concrete structure must satisfy the requirements of ACI 318, Sections 7.13.3 and 16.5.

For loadbearing wall structures, the following detailing recommendations on connections/ties will help resist progressive collapse:

- Provide horizontal and vertical ties in vertical joints between adjacent or intersecting bearing walls.
- Connect panels across horizontal joints by a minimum of two connections per panel.
- Connect all members to the lateral force resisting system and their supporting members. Tension ties must be provided in the transverse, longitudinal, and vertical directions and around the perimeter of the structure.
- Provide ties between transverse bearing walls and connecting floor panels.
- Do not use connection details that rely solely on friction caused by gravity loads.

Fig. 5.6.11
United States Federal Courthouse, Jacksonville, Florida;
Architect: KBJ Architects Inc.; Photo: Aerial & Architectural Photo, Inc.

In facilities designed for blast, architectural precast concrete column covers should be at least 6 in. (150 mm) from the structural member. This will make it considerably more difficult to place an explosive device directly against the structure. Because explosive pressures decay so rapidly, every inch of distance will help to protect the column.

5.6.10 Examples of Projects Designed for Blast

The first major federal courthouse built after the 1995 blast in Oklahoma City contains features intended to avoid a catastrophic collapse in the event of a terrorist attack (Fig. 5.6.10). The precast concrete panels were designed to be more ductile than conventional panels so they could absorb as much of a bomb blast as possible without destroying the connections that tie them to the main structure. The 6 in.-thick (150 mm) panels span 22 ft (6.7 m) from floor to floor. The vertical reinforcing rib system is shown in Fig. 5.6.9. Also note the use of bollards to increase the standoff distance.

The 15-story courthouse (Fig. 5.6.11) houses 17 courtrooms for a variety of federal jurisdictions. The precast concrete panels span floor-to-floor on the courtroom levels, requiring panels between 17 and 22 ft (5.2 and 6.7 m) tall. The majority of the panels are 9 in. (225 mm) thick with about 15% of the panels 7 in. (175 mm) thick. The panels transfer energy to the structure at the floor slabs, which act as diaphragms. This avoids having the blast loads transferred to the center of the structural columns, which could overstress them. The wind load requirements varied from 63 to 104 psf (3 to 5 kPa) depending on location and other variables while the dynamic blast criteria varied from an equivalent static pressure of 288 to 576 psf (14 to 28 kPa). To resist the increased forces generated by the blast energy, larger connection hardware than usual was used.

Beyond the typical performance requirements of designing for wind and seismic loads, the precast concrete panels and connections on the speculative office building in Fig. 5.6.12 had to resist directly applied blast loads plus the blast loads collected by the adjacent window systems that were superimposed on the

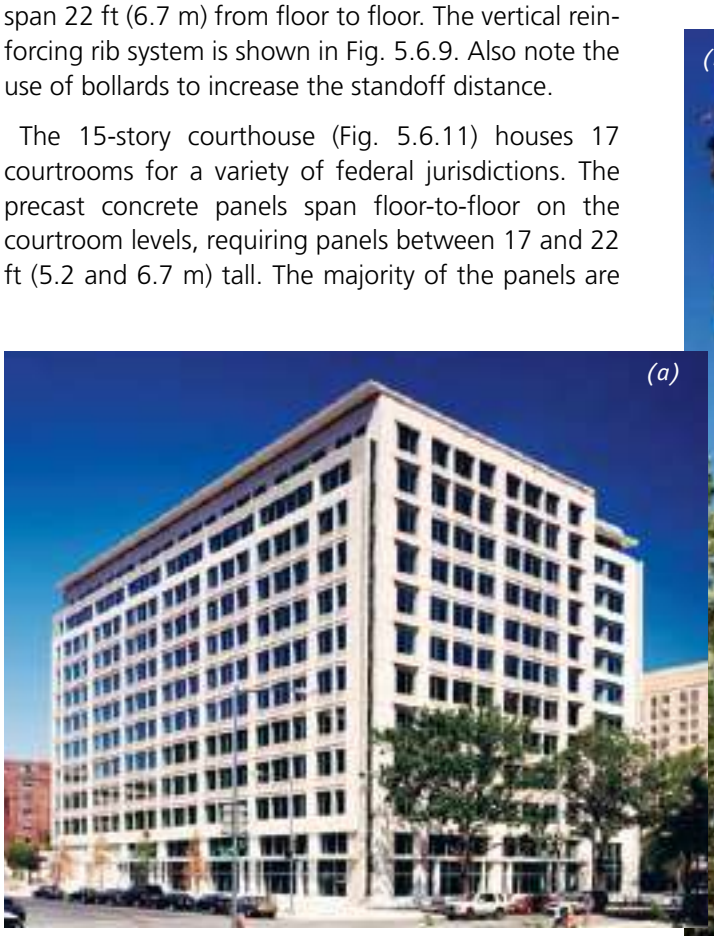

Fig. 5.6.12 (a) & (b)
Patriot Square Washington, D.C.; Architect: Gensler D.C.; Photos: Maxwell Mackenzie.

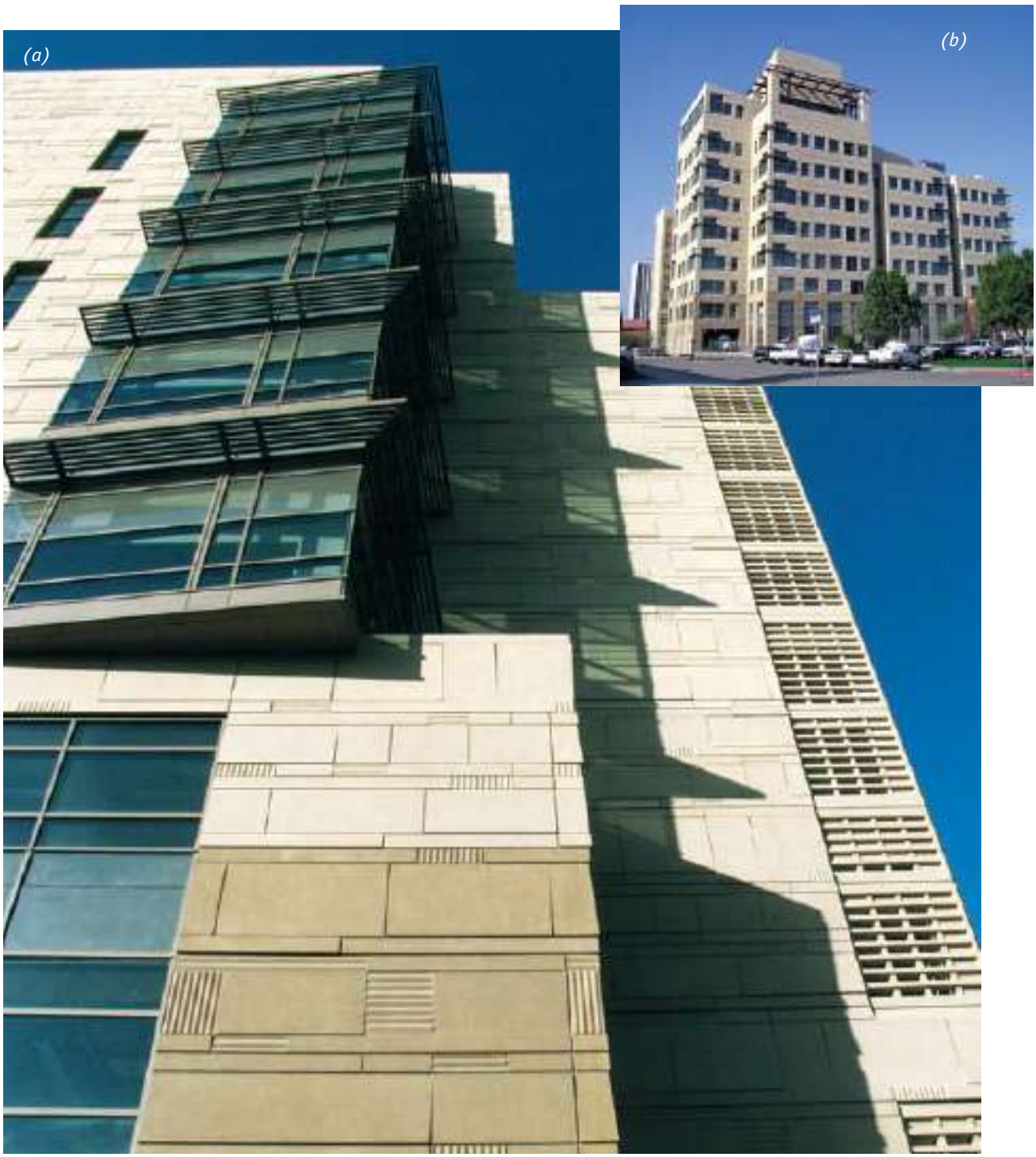

Fig. 5.6.13 (a) & (b)
Fresno Courthouse and Federal Building, Fresno, California; Architect: Moore Ruble Yudell Architects & Planners, Design Architect; Gruen Associates, Executive Architect.

panels. The building used texture and three-dimensional architectural precast concrete panels to create a distinctive look. The project uses two colors of precast concrete, replicating a limestone finish and a white, contrasting shade, to help create layers on the building and make the plaza areas (in white) stand out. The result makes the building seem even crisper in color and design. The textured approach was emphasized by the use of thin strips of precast concrete beneath the ribbon window, adding additional shadow lines.

The courthouse and federal building with nine levels above ground is the tallest structure in Fresno, Calif. (Fig. 5.6.13[a]). The patterning of the architectural precast concrete panels was designed to give a human scale to the potentially imposing building mass. The combination of vertical and horizontal patterning provides variation in visual texture throughout the day. The lower floors have a more rugged appearance than the upper floors and a warmer color to differentiate the base from the body of the building (Fig. 5.6.13[b]). The 6-in.-thick (150 mm) precast concrete panels are reinforced with integrally cast, large-ribbed pilasters to strengthen the panels and help achieve the blast resistance objectives.

The federal building, totaling 2 million gross sq. ft (185,800 m^2), consists of two separate buildings that are architecturally similar, eight and nine stories in height, respectively (Figs. 5.6.14[a] and [b]). While the complex, with its bold colors of white, dark green, and

Fig. 5.6.14(a) & (b)
U.S. Department of Transportation Headquarters, Washington, D.C.; Architect: Michael Graves & Associates, Design Architect; DMJM/AECOM, Architect of Record; Photos: ©Eric TaylorPhoto.com.

red, provides an outwardly open appearance and perception to the public, it conforms to stringent security criteria, including the GSA security design for new buildings as well as force protection guidelines (façade resistance to blast pressures). The building was originally designed to be 20 ft. (6.1 m) from the defensible perimeter inside the street curb line to the face of the building; this dimension was increased to 50 ft (15.2 m). The requirement to provide "controlled" vehicular access to the street between the two buildings was also added. The design of all of the exterior façade elements provides for the higher peak pressures and impulses for all panels regardless of the increased standoff distance from the explosive device or the calculated height above the explosive device. Additionally, in those areas where the standoff distance is less than 50 ft (15.2 m), the design provides for an "equivalent level of protection" to those exterior façade elements that would be affected. To provide the equivalent level of protection, the double-pane insulated glazing with an interior lite of laminated glazing, adhered to enhanced mullions, was designed to satisfy the maximum design peak pressure and impulse loading on the exterior façade elements with the limitation that fragments from no more than 10% of the total glazed area may exceed the GSA performance criteria.

Design criteria for the walls of the railroad command center (Fig. 5.6.15) includes the ability to withstand the impact of an irregular object at 200 mph (322 km/hr) and equivalent explosive force. The use of 12-in.-thick (300 mm) precast concrete wall panels met this criteria and, in their capacity as loadbearing walls, lessened the building's cost.

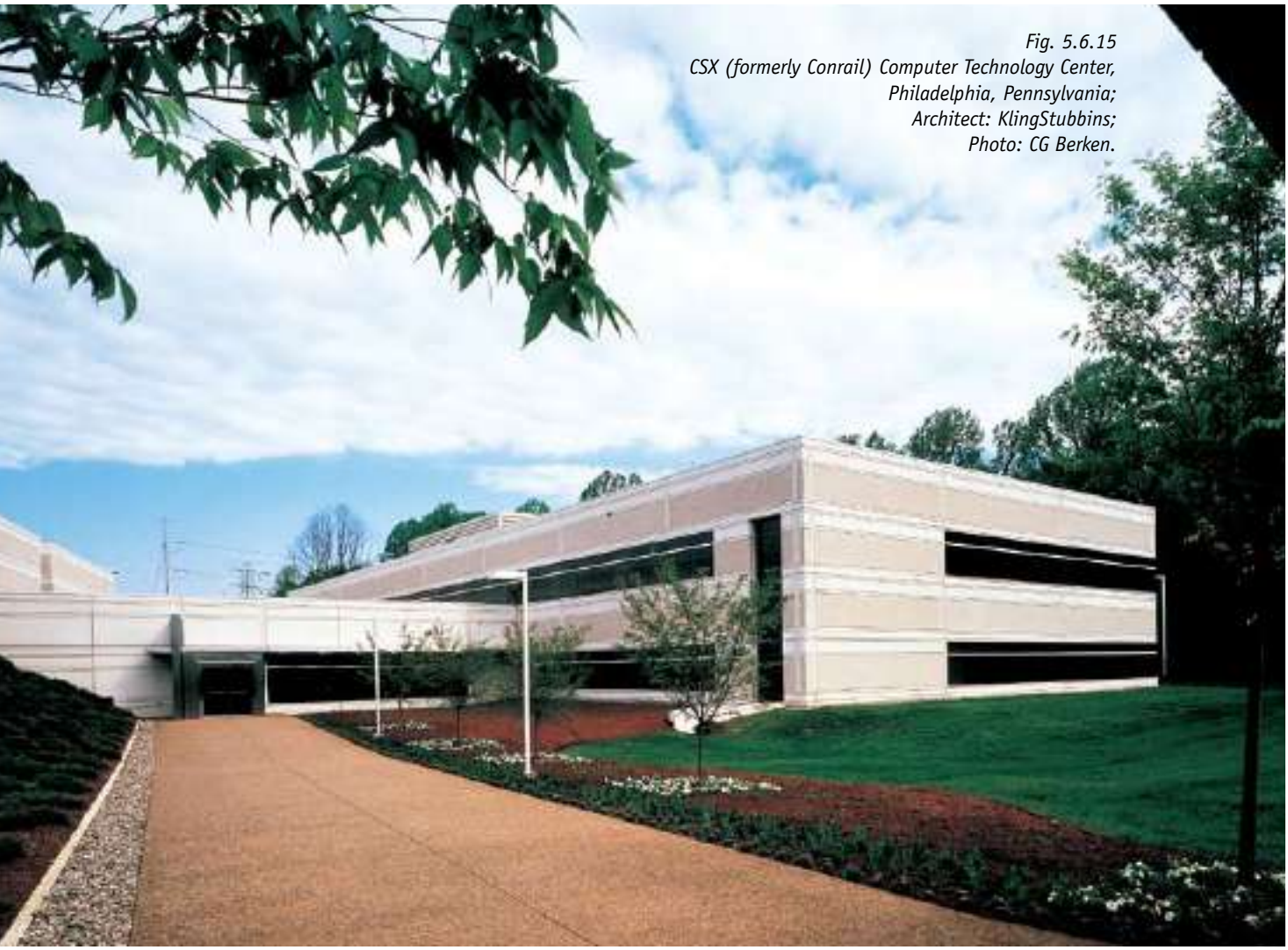

Fig. 5.6.15
CSX (formerly Conrail) Computer Technology Center, Philadelphia, Pennsylvania; Architect: KlingStubbins; Photo: CG Berken.

5.6.11 Connection Concepts and Details

Architectural precast concrete construction relies on mechanical connectors at discrete locations that may be damaged in a blast event, posing specific design issues for the engineer. These concerns can be overcome with proper detailing. The governing connection forces are based on the maximum percentage of reinforcement for wind, seismic, or blast loading, since the amount of steel is generally proportional to panel stiffness. The reaction forces for the design of the anchorages and connections should be based on panel width and be considered factored loads. The wind load reactions are based on elastic deformations of the panels.

Precast concrete cladding wall panel connection details for blast effects may be strengthened versions of conventional connections with a likely significant increase in connection hardware (Fig. 5.6.16 through 5.6.19). Connection details also may emulate cast-in-place concrete to provide a building that provides element continuity. For a panel to absorb blast energy (and provide ductility) while being structurally efficient, it must develop its full plastic flexural capacity, which assumes the development of a collapse mechanism. The connection failure mode should be yielding of the steel and not splitting, spalling, or pulling out of the concrete. Design material strengths may be increased by a dynamic-increase factor because of strain rate enhanced material properties. For structural steel, the factor ranges from 1.05 to 1.10 for tensile and yield strength depending on the steel grade. A factor of 1.25 applies to concrete compressive strength and the tensile and yield strengths of reinforcing steel. Also, the shear capacity of the component should be at least 20% greater than the member's dynamic flexural strength. Steel-to-steel connections should be designed so the weld is never

Fig. 5.6.16 – 19 Connection details.

Fig. 5.6.16(a – c) Panel to panel or alignment connections.

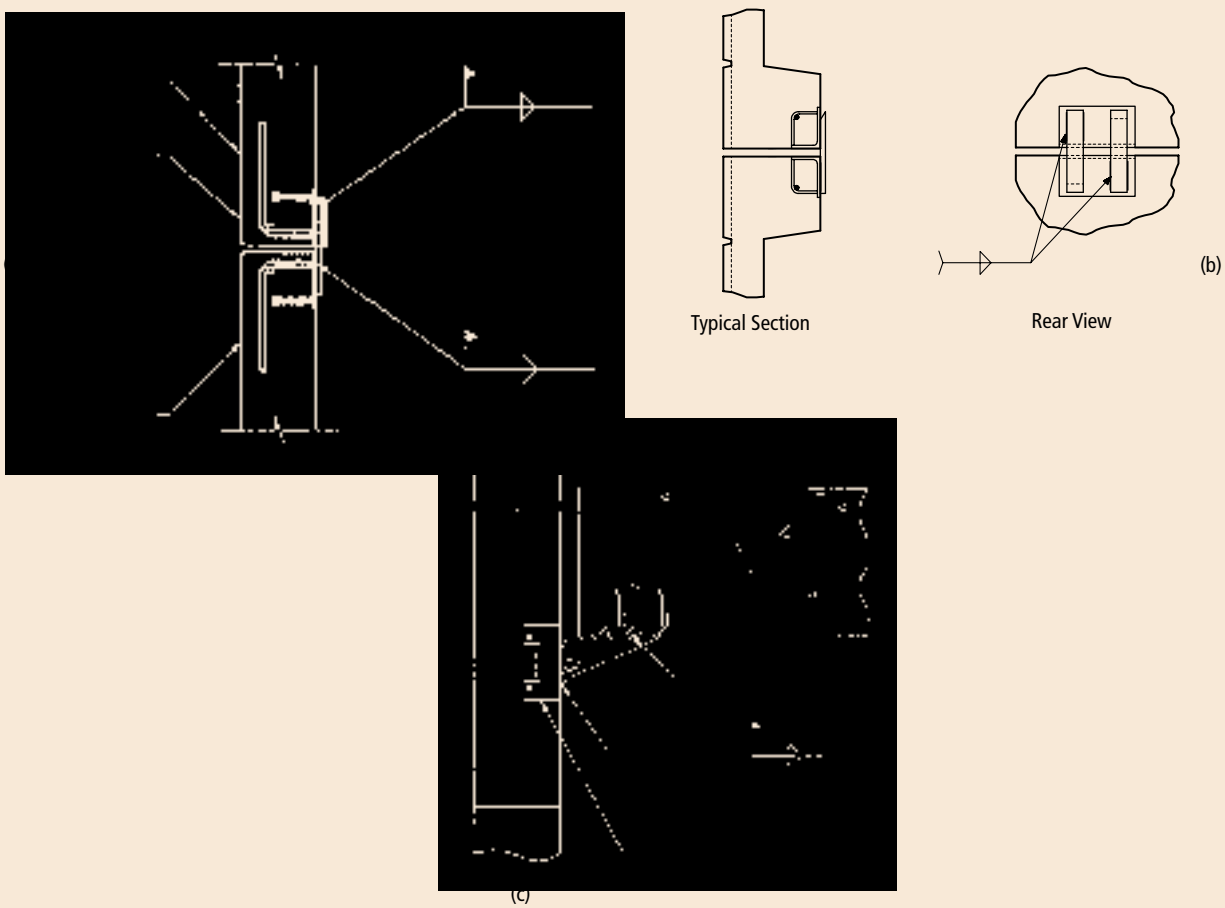

Fig. 5.6.17(a – e) Bearing connections.

(a)

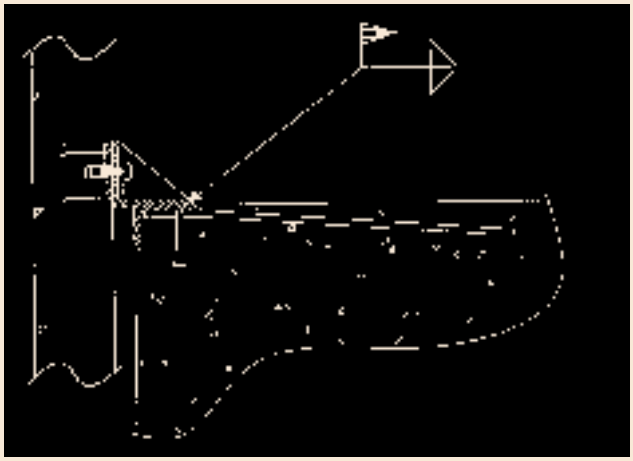

(b)

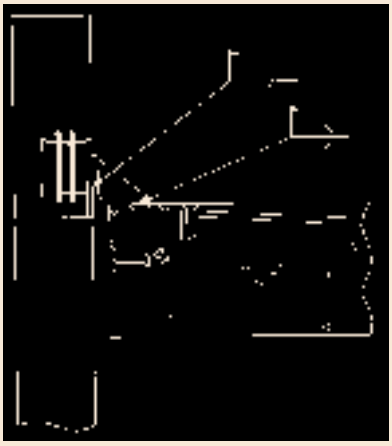

(c)

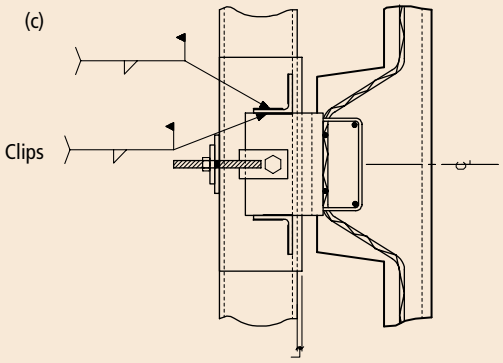

Plan

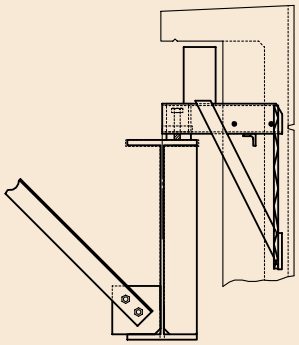

(d)

Section

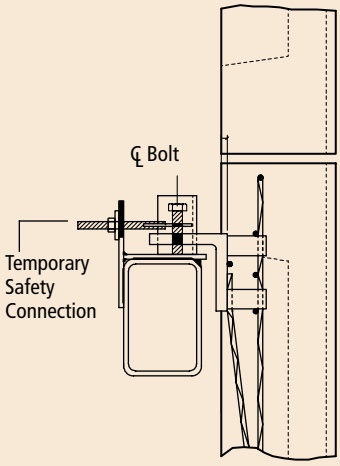

Section

bows inward and outward from the blast pressures.

sipate the energy from the blast.

Fig. 5.6.18(a) & (b) Push/pull or tie-back connections.

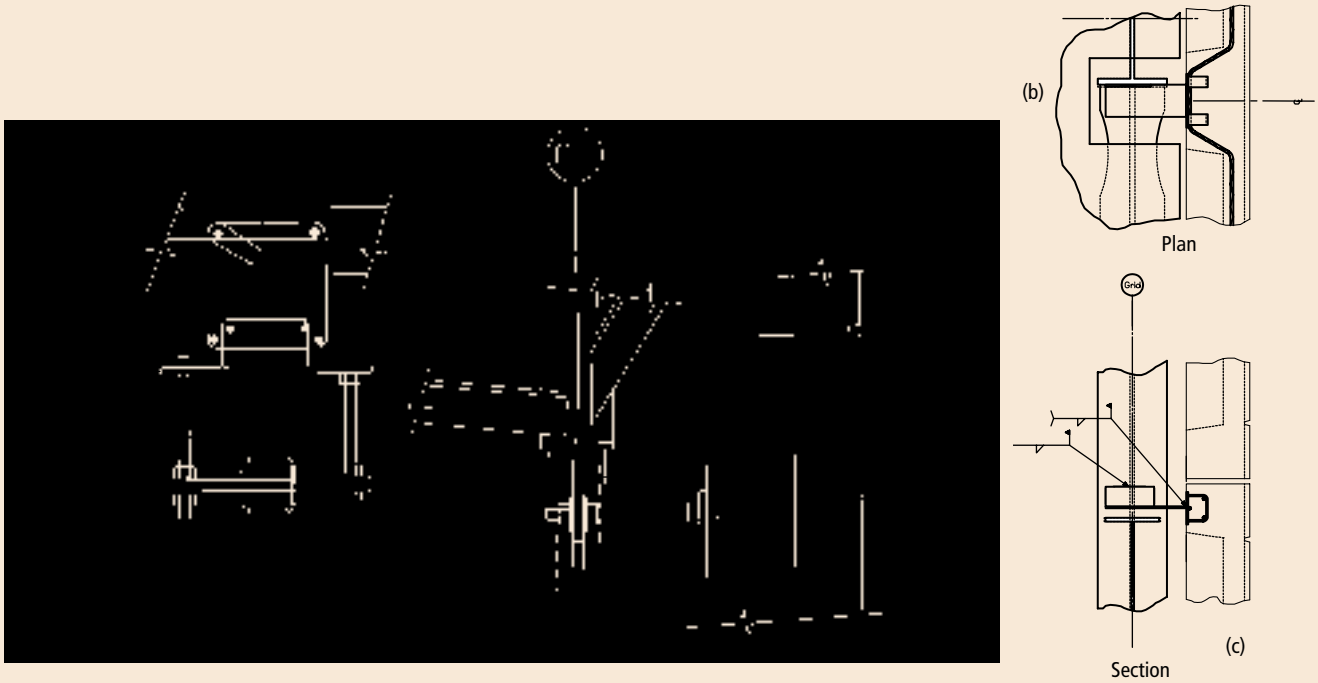

Fig. 5.6.19 Column cover connection.

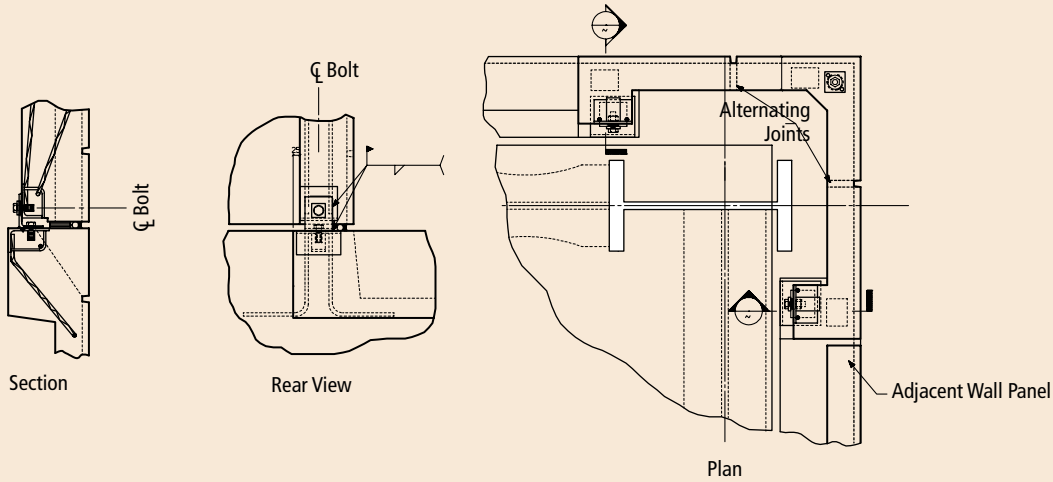

the weak link in the connection. Coordination with interior finishes needs to be considered due to the larger connection hardware required to resist the increased forces generated from the blast energy.

Where possible, connection details should provide for redundant load paths, since connections designed for blast may be stressed to near their ultimate capacity, the possibility of single connection failures must be considered. Consideration should be given to the number of components in the load path and the consequences of a failure of any one of them. The key concept in the development of these details is to trace the load or reaction through the connection. This is much more critical in blast design than in conventionally loaded structures. Connections to the structure should have as direct a load transmission path as practical, using as few connecting pieces as possible.

Rebound forces (load reversal) can be very high. These forces are a function of the mass and stiffness of the member as well as the ratio of blast load to peak resistance. A connection that provides adequate support during a positive phase load could allow a member to become dislodged during rebound. Therefore, connections should be checked for rebound loads (even if the panel is not designed for rebound). It is conservative to use the same load in rebound as for the inward pressure. More accurate values may be obtained through dynamic analysis and military handbooks.

It is also important that connections for blast-loaded members have sufficient rotational capacity. A connection may have sufficient strength to resist the applied load; however, when significant deformation of the member occurs this capacity may be reduced due to buckling of stiffeners, flanges, or changes in nominal connection geometry, etc.

The capacity of a panel to deform significantly and absorb energy is dependent on the ability of its connections to maintain integrity throughout the blast response. Failure can occur if connections become unstable at large displacements. The overall resistance of the panel assembly will be reduced, increasing deflections or otherwise impairing panel performance.

Both bolted and welded connections can perform well in a blast environment if they can develop strength at least equal to that of the connected elements (or at least the weakest of the connected elements).

5.6.12 Glazing

The façade is comprised of the transparent glazing and opaque exterior wall elements. The glazing, a blast-sensitive element, is the first building component likely to fail in response to the initial blast pressure that engulfs the building. Although the opaque wall elements may be designed to resist the loading, the options available for the glass are much more limited. These options include selecting an appropriate type of glass, applying security window (fragment-retention) film, installing blast curtains/shields, and/or using laminated glass. Due to the extreme intensity of car bomb blast pressures, glazing on the blast side of the target structure will likely fail depending on the standoff distance. There is a direct correlation between the degree of fenestration and the amount of debris that enters the occupied space. Historically, failed window glazing due to the direct pressures produced by an explosion has resulted in a considerable proportion of injuries, casualties, and loss of use of the facility.

The two keys to protecting the workspace are attempting to prevent the windows from failing and ensuring that the windows fail properly if overloaded. While a great number of injuries are related to flying glass shards, it is not the only significant source of injury, though it is usually a more visible one. The other visible cause of injury is falling debris. One of the less visible causes of injuries is blast pressure, which can rupture ear drums, collapse lungs, or even crush skulls. These injuries, which begin at pressures near 15 psi (103 kPa), can be reduced if the level of blast pressures entering the space is reduced. The amount of blast pressure that enters the space is directly proportional to the amount of openings on the structure's façade. Also, smaller windows will generally break at higher pressures than larger windows, making them less prone to breakage. Consideration should be given to designing narrow, recessed windows with sloped sills

Fig. 5.6.20 Narrow and recessed windows with sloped sills.

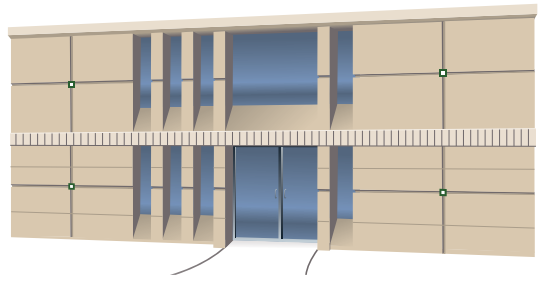

Source: U.S. Air Force, Installation Force Protection Guide

because they are less vulnerable to blast (Fig. 5.6.20). Narrow, recessed windows, however, will impact the building's design both aesthetically and functionally. To the extent that nonfrangible glass isolates a building's interior from blast shock waves, it can also reduce damage to interior framing elements (supported floor slabs could be made to be less likely to fail due to uplift forces) for exterior blasts.

In embassies, the earliest type of civilian building designed to resist blast events, fenestration is limited to 15% of the effective wall area (calculated using the floor-to-floor height and width of a single bay). While this helps in the protective design, it does not provide the proper lighting or open feeling that is desired in commercial office buildings; consequently, the fenestration limitations are often increased to 40% for commercial buildings with increased scrutiny paid to glazing detailing.

The second design aspect for windows is to ensure that they fail properly if overloaded. Special blast-resistant windows can be designed not to fail for the small to mid-sized opening described previously, provided that the loading is limited. Annealed float glass, the most common form of architectural glass, behaves poorly when loaded dynamically.

While typical annealed float glass is only capable of resisting, at most, 2 psi (14 kPa) of blast pressure, several other types of glazing exist that can resist moderately larger blast pressures. Thermally tempered glass (TTG) (ANSI Z97.1 or ASTM C1048) and polycarbonate glazing (also known as bullet-resistant glass) can be made in sheets up to about 1 in. (25 mm) thick and can resist pressures up to about 30 to 40 psi (200 to 275 kPa). Laminated (60 mil interlayer thickness) annealed glass with a 1.4 in. (6 mm) bead of structural sealant around the inside perimeter exhibits the best post-damage behavior and provides the highest degree of safety to occupants. *(Refer to ASTM F2248, Standard Practice for Specifying an Equivalent 3-Second Duration Design Load for Blast Resistant Glazing Fabricated with Laminated Glass).* The lamination holds the glass shards together in explosive events, reducing their potential to cause laceration injuries. The structural sealant helps to hold the pane in the frame for higher loads. For insulated units, only the inner pane needs to be laminated. Associated with each of these upgrades is a considerable increase in cost for the glazing material. The window bite (the depth of window captured by the frame) needs to be at least $^1/_2$ in. (13 mm).

Equally important to the design of the glass is the design of the glazing system and the framing to which the glazing is attached. Glazing, frames, and attachments must be treated as an integrated system and be capable of resisting blast pressures and transferring the loads to the cladding to which the frame is attached. To fail as predicted, a window must be held in place long enough to develop the proper stresses that cause failure. Otherwise, the window may disengage from its frame intact and pose a post-event threat or cause serious damage or injury. Therefore, the frame and anchorage should be designed to develop the full loading anticipated for the chosen glazing type. Depending on the façade, the cladding panels to which the windows are attached must be able to support the reaction forces of a window loaded to failure.

Window frames and mullions of steel, steel-reinforced aluminum, and heavy-walled aluminum are common for blast-resistant framing components. Frames, mullions, and window hardware should be designed to resist a minimum static load of 1 psi (7 kPa) applied to the surface of the glazing or a dynamic load may be applied using the peak pressure and impulse values. However, designing for 1 psi static loading will not necessarily ensure that the window frames, mullions, and anchorages are capable of developing the full strength of the laminate interlayer. The equivalent static value is dependent on the type of glass, thickness of glass, size of window unit, and thickness of laminate interlayer used. Also, a static approach may lead to a design that is not practical, as the mullion can become very deep and heavy, driving up the weight and cost of the window system.

The loading of the frame will depend on the design blast pressure and the size of the window. As a minimum, frame connections to surrounding walls should be designed to resist a combined ultimate loading consisting of a tension force of 200 lbs/in. (35 kN/m) and a shear force of 75 lbs/in. (13 kN/m). Typically, this requires a plate with anchors rather than a simple bolted connection. Frame-supporting elements and their connections should be designed based on their ultimate capacities. In addition, because the resulting dynamic loads are likely to be dissipated through multiple mechanisms, it is not necessary to account for reactions from the supporting elements in the design of the remainder of the structure. Additional reinforcement should be provided at window openings. Vertical and horizontal reinforcement that would have occu-

pied the opening width should be evenly distributed on each side. Also, shear reinforcement should be provided as required around the opening.

Figure 5.6.21 shows a typical section through a frame containing a blast window. The primary elements include an inner frame holding the glazing and an outer frame anchored to the structure. The inner frame consists of a frame angle and glazing stop. The frame angle is typically an A36 angle cut to the desired dimensions. The glazing stop is fabricated from a structural angle, a structural tube (as shown), or an A36 bar with countersunk holes. The entire inner frame is designed to allow replacement of the glazing. Windows are typically factory-glazed and mounted in the window openings as a complete unit.

The window is held and supported by continuous gaskets on the inside and outside faces of the glazing. Neoprene gaskets are used for glass and santoprene is used for polycarbonate/glass lay-ups. Setting blocks provide a cushion for the glazing and clearance for thermal expansion and rotation of the glazing during blast loading.

The outer frame, referred to as an embed, is fabricated from A36 plate, channel, or angle depending on the particular geometry of the concrete wall and architectural treatment. The embed shown in Fig. 5.6.21 consists of a $^1/_2$ in. × 6 in. (13mm × 150mm) steel plate. The inner frame is connected to the embed using high-strength bolts in drilled and tapped holes in the embed plate. Shim space should not be greater than $^1/_4$ in. (6.3mm) to minimize the length of the frame bolts. Corrosion resistant, usually stainless, shims are placed at each bolt when required. The frames may be cantilevered out from the edge of the wall to reduce the recessed distance when a thick architectural façade is used. This cantilevered distance is usually not greater than 1.5 in. (38mm).

The blast-resistant glazing for the Lloyd D. George Federal Building and United States Courthouse, Las Vegas is a 1 in. (25 mm) thick insulating unit composed of an annealed exterior light, a $^1/_2$ in. (13 mm) air space, and a laminated interior lite held in place by an aluminum frame (Fig. 5.6.22. The inboard lite is composed of a polyvinyl-butral layer between two sheets of $^1/_8$ in. (3 mm) thick annealed glass. This design uses annealed

Fig. 5.6.21 Generic blast window glazing and frame detail.

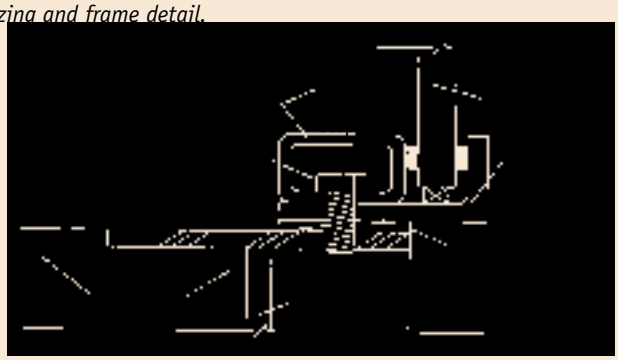

Source: Structural Design for Physical Security: State of the Practice, Structural Engineering Institute of American Society of Civil Engineers, Reston, VA, 1999.

Fig. 5.6.22 Blast-resistant glazing detail

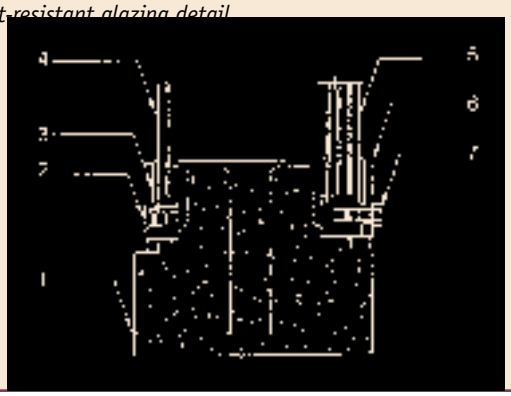

1 Concrete panel with embedded steel channel
2 Screw fastener
3 Gasket with silicone sealant above
4 Sacrificial lite
5 Blast-resistant glass
6 Steel plate
7 Bolt

glass in lieu of the stronger tempered glass because it has more flexible properties, which absorb the impact of the explosion.

Window glazing assessments and designs for blast response may be performed using one of the government produced and sponsored computer programs such as ***WINGARD*** (***WIN***dow ***G***lazing ***A***nalysis ***R***esponse & ***D***esign). This computer program was developed by the US General Services Administration and is available to Government Agencies and their contractors. WINGARD may be downloaded from the GSA's Office of the Chief Architect web site (www.oca.gsa.gov) or obtained from the developer (Applied Research Associates, 119 Monument Place, Vicksburg, MS 39180). The engineer should define the structural design criteria and coordinate with the building's architect to assure the window manufacturer's correct interpretation.

Drawbacks of high-performance glazing systems include cost and high maintenance. When the cost for installing blast-resistant windows is significant relative to the total cost of the building, resources allocated to protective design may be better applied toward upgrading the structural frame to be blast resistant. This is because the blast pressures from a close in car or truck bomb can far exceed the allowable pressures any window system can resist. As a point of reference, façade blast pressures in the Oklahoma City bombing were on the order of 4,000 psi (28 MPa) – 100 times higher than the design pressures described above.

Atriums incorporating large vertical glazed openings on the building façade, common in prestigious office buildings, cannot be designed to withstand blast pressures from a close-in explosion. It is not reasonable to harden the exterior walls of the structure and leave an atrium's exterior wall of this type as an inviting target. Atrium balcony parapets, spandrel beams, and exposed slabs must be strengthened to withstand loads that are transmitted through exterior glass or framing. Another approach is to use an internal atrium with no outward facing windows or an atrium with clerestory windows that are close to the ceiling and angling the windows away from the curb to reduce the pressure levels.

5.6.13 Initial Costs

The initial construction cost of protection has two components: fixed and variable. Fixed costs include such items as security hardware and space requirements. These costs do not depend on the level of an attack; that is, it costs the same to keep a truck away from a building whether the truck contains 500 or 5000 lb (227 or 2268 kg) of TNT. Blast protection, on the other hand, is a variable cost. It depends on the threat level, which is a function of the explosive charge weight and the standoff distance.

The optimal standoff distance is determined by defining the total cost of protection as the sum of the cost of protection (construction cost) and the cost of standoff (land cost). These two costs are considered as a function of the standoff for a given explosive charge weight. The cost of protection is assumed to be proportional to the peak pressure at the building envelope, and the cost of land is a function of the square of the standoff distance. The optimal standoff is the one that minimizes the sum of these costs.

If additional land is not available to move the secured perimeter farther from the building, the required floor area of the building can be distributed among additional floors. As the number of floors is increased, the footprint decreases, providing an increased standoff distance. Balancing the increasing cost of the structure (due to the added floors) and the corresponding decrease in protection cost (due to added standoff), it is possible to find the optimal number of floors to minimize the cost of protection.

Though it is difficult to assign costs to various upgrade measures because they vary based on the site specific design, some generalizations can be made (Fig. 5.6.23). In some cases, the owner may decide to prioritize enhancements, based on their effectiveness in saving lives and reducing injuries. For instance, measures against progressive collapse are perhaps the most effective actions that can be implemented to save lives and should be considered above any other upgrades. Laminated glass is perhaps the single most effective measure to reduce extensive non-fatal injuries.

An awareness of a blast threat from the beginning of a project helps to decide early what the priorities are for the facility. Including protective measures as part of the discussion regarding trade-offs early in the design process often helps to clarify the issues.

Ultimately, the willingness to pay the additional cost for protection against blast hazards is a function of the "probability of regrets" in the event a sizable incident occurs. In some situations, the small probability of an incident may not be compelling enough to institute

Fig. 5.5.23 Plots showing relationship between cost of upgrading various building compnents, standoff distance, and risk.

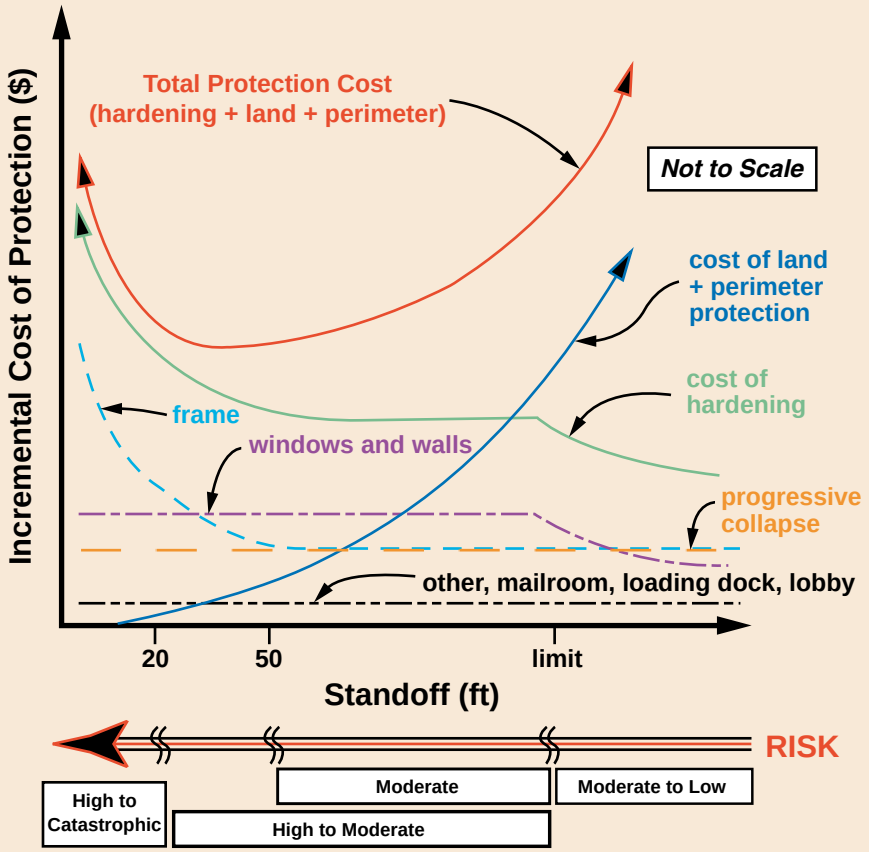

Source: Federal Emergency Management Agency. Primer for Design of Commercial Buildings to Mitigate Terrorist Attacks. FEMA 427 (Washington, DC: Federal Emergency Management Agency, 2004)

the design enhancements. Using this type of logic, it is likely to lead to a selection process in which buildings stratify into two groups: those that incorporate no measures at all or only the most minimal provisions and those that incorporate high levels of protection. It also leads to the conclusion that it may not be appropriate to consider any but the most minimal measures for most buildings.

5.6.14 References

In addition to the publications referenced in the text or figures, the following publications are useful. A number of the governmental publications may be for official use only with restricted access.

1 The American Institute of Architects. 2001. *Building Security Through Design: A Primer for Architects, Design Professionals, and Their Clients*. Washington DC: The American Institute of Architects.

2. Mays, G. C., and P. D. Smith. 1995. *Blast Effects on Buildings: Design of Buildings to Optimize Resistance to Blast Loading*. London: Thomas Telford, Ltd.

3. American Society of Civil Engineers. 1997. Design of Blast Resistant Buildings in Petrochemical Facilities. Reston, VA: ASCE.

4. U.S. Department of State, Bureau of Diplomatic Security. March 1998. *Architectural Engineering Design Guidelines* (5 Volumes). Washington, DC.

5. U. S. Department of State, Bureau of Diplomatic Security. August 1995. *Structural Engineering Guidelines for New Embassy Office Buildings*. Washington, DC.

6. Krauthammer, T. 2004. Conventional Blasts, Ballistic Attack, and Related Threats. *The Construction Specifier* (May).

7. SBEDS (SDOF Blast Effects Design Spreadsheets). SBEDS is an Excel© based tool for the design and analysis of structural components subjected to dynamic loads, such as air blast from explosives, using single degree of freedom (SDOF) methodology. SBEDS is based on Army TM 5-1300 (also designated as NAVFAC P-397 and AFR 88-22) and UFC 3-340-01 but draws on other sources where improved methodologies are available. Download of SBEDS by U.S. government agencies and their contractors is available from the Protective Design Center website https://pdc.usace.army.mil/software/sbeds. All other requests for SBEDS should be emailed to DLL-CENWO-PDC-HD@nwo02.usace.army.mil.

8. CEDAW (Component Explosive Damage Assessment Workbook). CEDAW is an Excel-based tool for generation of pressure-impulse (P-i) and charge weight-standoff (CW-S) damage-level curves for structural components. The U.S. Army Corps of Engineers Protective Design Center developed CEDAW as a tool for designers to use in satisfying Department of Defense (DoD) antiterrorism standards. Download of CEDAW by U.S. government agencies and their contractors is available from the PDC website https://pdc.usace.army.mil. All other requests for CEDAW should be emailed to dll-cenwo-PDC-CEDAW@nwo02.usace.army.mil.

9. Protective Structures Automated Design System (PSADS). Request through the headquarters of the U.S. Army Corps of Engineers; Attention: CEMP-ET, 441 G. Street NW, Washington, DC 20314-1000. PSADS includes DAHS, BlastX, and SPAn32. Restricted distribution to government agencies and their contractors. If you are a government contractor, request government project manager to obtain the software.

5.7 FIRE RESISTANCE

5.7.1 General

In the interest of life safety and property protection, building codes require that resistance to fire be considered in the design of buildings. The degree of fire resistance required depends on the type of occupancy, the size of the building, its location (proximity to property lines and within established fire zones), and in some cases, the amount and type of fire detection and suppression equipment available in the structure. Precast concrete members are inherently non-combustible and can be designed to meet any degree of fire resistance that may be required by building codes, insurance companies, and other authorities.

In Fig. 5.7.1, the dimensional constraints imposed by the site required building to the property lines. A precast concrete panel system was selected over a unit masonry wall system to cost-effectively solve the problem of the required 4-hour, fire-rated, exterior property-line walls that are architecturally consistent with street elevations. These large walls had to be considered as "temporary" with the prospect of being concealed by adjacent buildings some time in the future.

Although life safety is of paramount importance, casualty insurance companies and owners are also concerned with the damage that might be inflicted on the building and its contents during a fire. This means that both fire containment and fire resistance must be considered. Insurance rates are often substantially lower for buildings with higher fire-resistance ratings and containment designs. In the past, fire-resistance ratings were assigned on the basis of results of standard fire tests. In recent years, there has been a trend toward calculating the fire endurance of building components, rather than relying entirely on fire tests. To facilitate this trend, much research work has been conducted on the behavior of materials and building components in fires. This section summarizes the available information on the behavior of architectural precast concrete under fire conditions. See Section 4.5.7 for a discussion on fire protection of connections and Section 4.7.9 for fire resistance of joints.

Fire resistance ratings of building components are measured and specified in accordance with a common standard, ASTM E119. Fire endurance is defined as the period of time elapsed before a prescribed condition of failure or end point is reached during a standard fire test. The major "end points" used to evaluate performance in a fire test include:

1. Collapse of loadbearing specimens (structural end point).
2 Formation of holes, cracks, or fissures through which flames or gases hot enough to ignite cotton waste may pass (flame passage end point).

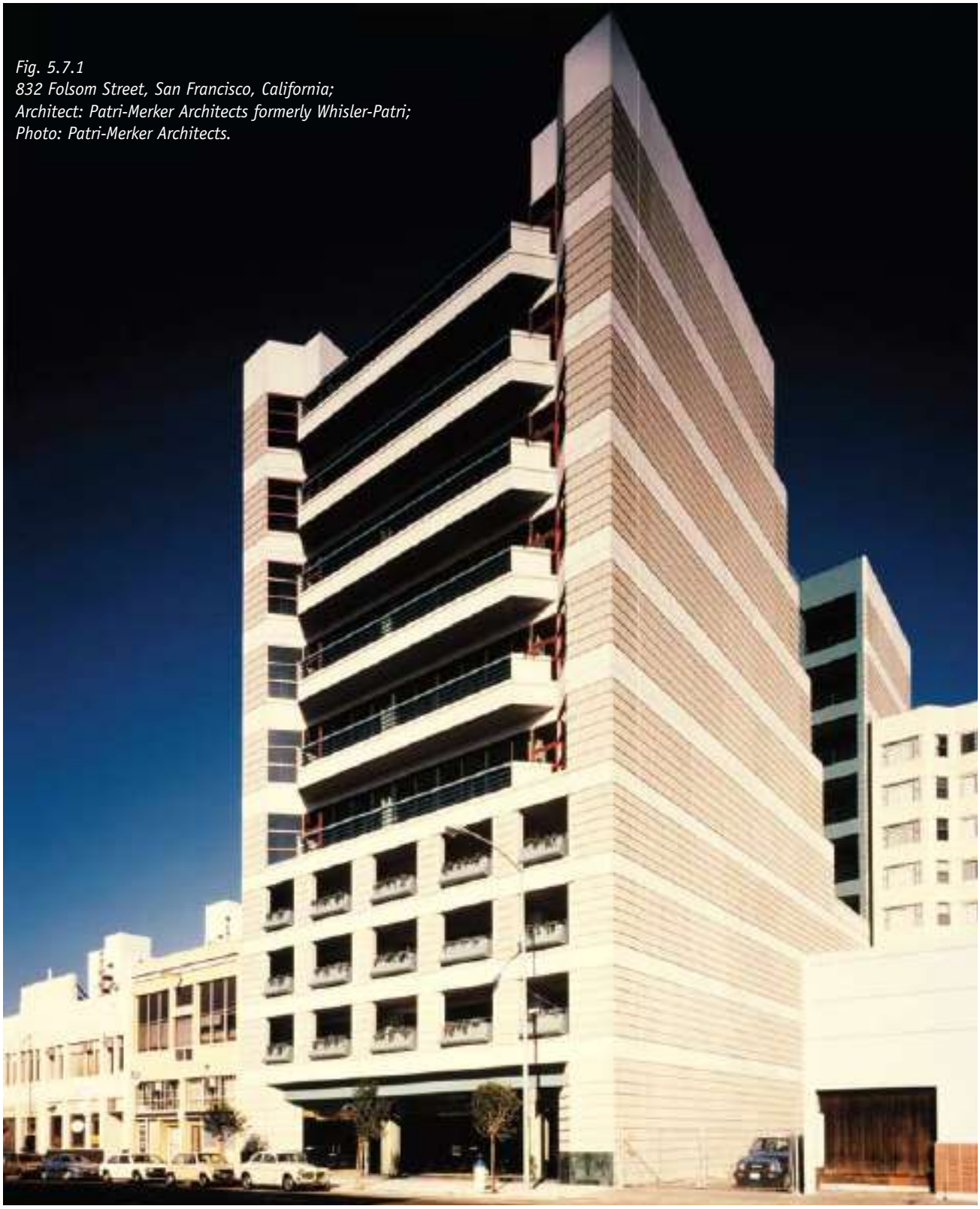

Fig. 5.7.1
832 Folsom Street, San Francisco, California;
Architect: Patri-Merker Architects formerly Whisler-Patri;
Photo: Patri-Merker Architects.

3. Temperature increase of the unexposed surface of floors, roofs, or walls reaching an average of 250 °F (122 °C) or a maximum of 325 °F (163 °C) at any one point (heat transmission end point).
4. Collapse of walls and partitions during a hose-stream test or inability to support twice the superimposed load following the hose-stream test.

Table 5.7.1. Fire Safety Provisions in IBC 2006 Edition, Provisions to Prevent Building-to-Building Fire Spread.*

Exterior walls (Load bearing – ratings)	Tables 601 & 602 – Rating depends on type of construction but not less than required for exterior walls based on fire separation distance, type of construction, and building use.
Exterior walls (Non-load bearing – ratings)	Table 602 – Ratings vary based on setback distances, type of construction, and building use, with zero rating allowed for setbacks >30 ft. For setbacks >5 ft, rating required for inside exposure only.
Exterior walls (Parapets)	704.11 – Extend 30 in. above roof except where: 1. Exterior walls don't require ratings. 2. Roofs terminate at 2-hr noncombustible roofs. 3. Roofs terminate at 1-hr combustible roofs sheathing with Class B roofing.
Exterior walls (Limitations on area of openings)	704.8 – Different percent limits for unprotected and protected openings based on setback distances, with unlimited openings allowed over 30 ft and 20 ft, respectively. In other than H-1, H-2, H-3 occupancies, allows opening percent for unprotected to equal protected for sprinklers.
Combustibility of cladding on exterior walls	1406.2 & 2603.5 – Combustible exterior wall finish, other than Fire Resistant Treated Wood, limited to 10% of wall area where less than or equal to 5 ft setback distance is provided. On exterior walls of Types I, II, III, and IV construction, combustible trim is not permitted more than 3 stories or 40 ft above grade plane. Neither of the above applies to foam plastic complying with Section 2603.6.

*One- and two-family dwelling and townhouse provisions are not a part of this analysis.

A fire-resistance rating (sometimes called a fire rating, a fire-resistance classification, or an hourly rating) is a legal term defined in building codes, usually based on fire endurance. Building codes specify required fire-resistance ratings for various types of construction, occupancy, and fire separation distance. Table 5.7.1 shows fire safety provisions relative to walls in the IBC 2006 edition. Performance is defined by the authorities (regulatory and insurance) as the maximum time for which each component would survive if it were subjected to a standard test. The standard tests provide arbitrary fire exposure, arbitrary load, and arbitrary restraint.

5.7.2 Fire Endurance of Walls

The fire endurances of precast concrete walls, as determined by fire tests, are almost universally governed by the ASTM E119 criteria for heat transmission (temperature rise of the unexposed surface) rather than by structural behavior during fire tests. This is probably due to the low level of stresses, even in concrete bearing walls, and the fact that reinforcement generally does not perform a primary structural function. In most cases, the amount of concrete cover protection for structural design exceeds the amount required for fire protection, and so there is, in effect, reserve structural fire endurance within the concrete wall.

Most of the information on heat transmission was derived from fire tests of assemblies tested in a horizontal position simulating floors or roofs. The data are slightly conservative for assemblies tested vertically, that is, as walls. Nevertheless, it is suggested that no correction be made unless more specific data derived from fire tests of walls are used.

For concrete wall panels, the temperature rise of the unexposed surface depends mainly on the thickness and aggregate type of the concrete. Other less important factors include unit weight, moisture condition, air content, and maximum aggregate size. Within the usual ranges, water-cement ratio, strength, and age have insignificant effects.

From information that has been developed from fire tests, it is possible to accurately estimate the thickness of many types of one-course and multi-course walls that

Table 5.7.2. Fire Endurances for Single-Mixture Concrete Panel.

Aggregate	Thickness for fire endurance, in.			
	1 hr	2 hr	3 hr	4 hr
All lightweight	2.47	3.56	4.35	5.10
Sand-lightweight	2.63	3.76	4.62	5.37
Carbonate	3.25	4.67	5.75	6.63
Siliceous	3.48	5.00	6.15	7.05

Table 5.7.3. Thickness of Wythes to Provide Various Fire Endurances for Panels with Facing and Backup Materials.

Fire Endurance, hr	Backup Material: Inside Wythe Material (Fire-Exposed Side)	Siliceous Aggregate Concrete, in. (Facing Material)			Sand-Lightweight Concrete, in. (Facing Material)		
		1 1/2	2	3	1 1/2	2	3
1	Carbonate aggregate concrete*	1.9	1.4	0.45	1.7	1.0	0
1	Siliceous aggregate concrete	2.0	1.48	0.48	1.7	1.0	0
1	Lightweight aggregate concrete	1.5	1.2	0.25	1.13	0.63	0
1	Cellular concrete (30 pcf)	0.7	0.5	0.2	0.5	0.3	0
1	Perlite concrete (30 pcf)	0.8	0.6	0.2	0.7	0.4	0
1	Vermiculite concrete (30 pcf)	0.9	0.6	0.2	0.7	0.4	0
1	Sprayed mineral fiber	0.4	0.25	0.1	0.4	0.2	0
1	Sprayed vermiculite cementitious material	0.4	0.25	0.1	0.4	0.2	0
2	Carbonate aggregate concrete*	3.25	2.8	1.9	3.2	2.6	1.25
2	Siliceous aggregate concrete	3.5	3.0	2.0	3.3	2.7	1.3
2	Lightweight aggregate concrete	2.5	2.1	1.4	2.26	1.76	0.76
2	Cellular concrete (30 pcf)	1.2	1.0	0.6	1.2	0.9	0.4
2	Perlite concrete (30 pcf)	1.4	1.1	0.7	1.3	0.9	0.4
2	Vermiculite concrete (30 pcf)	1.6	1.3	0.8	1.4	1.1	0.4
2	Sprayed mineral fiber	1.1	0.8	0.5	1.0	0.8	0.3
2	Sprayed vermiculite cementitious material	1.0	0.8	0.5	1.0	0.75	0.3
3	Carbonate aggregate concrete*	4.4	3.9	3.0	4.2	3.7	2.4
3	Siliceous aggregate concrete	4.65	4.15	3.15	4.4	3.8	2.5
3	Lightweight aggregate concrete	3.4	3.1	2.4	3.12	2.62	1.62
3	Cellular concrete (30 pcf)	1.6	1.3	0.9	1.6	1.3	0.8
3	Perlite concrete (30 pcf)	1.9	1.6	1.1	1.8	1.4	0.8
3	Vermiculite concrete (30 pcf)	2.2	1.8	1.3	2.0	1.6	1.0
3	Sprayed mineral fiber	NA	1.4	0.9	NA	1.3	0.85
3	Sprayed vermiculite cementitious material	1.6	1.35	0.85	1.6	1.3	0.8
4	Carbonate aggregate concrete*	5.15	4.8	3.85	5.2	4.7	3.5
4	Siliceous aggregate concrete	5.55	5.05	4.05	5.5	4.9	3.7
4	Lightweight aggregate concrete	4.2	3.8	3.0	3.87	3.37	2.37
4	Cellular concrete (30 pcf)	2.1	1.9	1.4	2.0	1.7	1.1
4	Perlite concrete (30 pcf)	2.3	2.0	1.5	2.3	1.9	1.3
4	Vermiculite concrete (30 pcf)	2.7	2.3	1.7	2.6	2.2	1.5
4	Sprayed mineral fiber	NA	NA	1.4	NA	NA	1.4
4	Sprayed vermiculite cementitious material	NA	1.8	1.3	1.75	1.75	1.25

*Tabulated values for thickness of inside wythe are conservative for carbonate aggregate concrete.

Note: 1. NA = not applicable; that is, a thicker facing material is needed.
2. To obtain thickness of concrete for a specific fire endurance, read across and then up. For example, a 2 hr fire endurance for a 2 in. siliceous facing and carbonate backup requires 4.8 in. of concrete.

Fig. 5.7.2 Fire endurance (heat transmission) as a function of panel thickness.

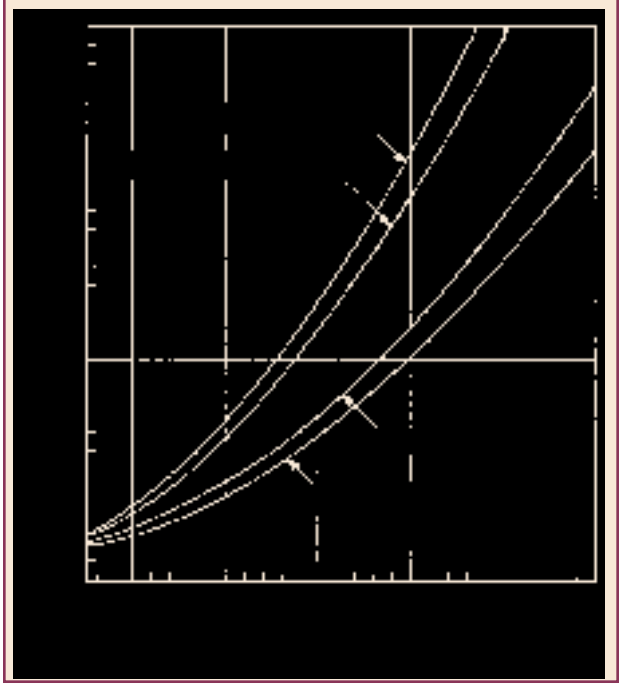

will provide fire endurances of 1, 2, 3, or 4 hours, based on the temperature rise of the unexposed surface (refer to ACI 216.1/TMS 0216.1). Based on fire test data, the thicknesses shown in Fig. 5.7.2 and Tables 5.7.2 and 5.7.3 can be expected to provide the fire endurances indicated for single-course and two-course walls. Figure 5.7.2 shows the fire endurance (heat transmission) of concrete as influenced by aggregate type and thickness. Interpolation of varying concrete unit weights is acceptable in this figure. Table 5.7.2 provides the thickness (in inches) of solid concrete wall panels for various fire endurances, while Table 5.7.3 provides the same for two-course panels.

As used in this section, concrete aggregates are designated as lightweight, sand-lightweight, carbonate, or siliceous.

1. Lightweight aggregates include expanded clay, shale, slate, and sintered fly ash. These materials produce concretes having unit weights of about 95 to 105 pcf (1520 to 1680 kg/m^3) without sand replacement.
2. Lightweight concretes in which sand is used as part of or all of the fine aggregate, and unit weight of 105 to 120 pcf (1680 to 1920 kg/m^3), are designated as sand-lightweight.

Table 5.7.4 Use of $^5/_8$ in. Type X Gypsum Wallboard.

Aggregate	Thickness of Concrete Panel for Fire Endurance, in.			
	With $^7/_8$ in. air space		With 6 in. air space	
	2 hr	3 hr	2 hr	3 hr
Sand-lightweight	2.5	3.6	2.0	2.5
Carbonate	2.8	4.0	2.0	2.7
Siliceous	2.9	4.2	2.0	2.8

3. Carbonate aggregates include limestone and dolomite (minerals consisting mainly of calcium and/or magnesium carbonate).
4. Siliceous aggregates include quartzite, granite, basalt, and most rocks other than limestone and dolomite.

Ribbed panel heat transmission is influenced by both the thinnest portion of the panel and by the panel's "equivalent thickness." Here, equivalent thickness is defined as the net cross-sectional area of the panel divided by the width of the cross-section. In calculating the net cross-sectional area of the panel, portions of ribs that project beyond twice the minimum thickness should be neglected (Fig. 5.7.3).

The fire endurance (as defined by the heat transmission end point) can be governed by either the thinnest section, the average thickness, or a combination of the two. The following rule-of-thumb expressions describe the conditions under which each set of criteria governs.

Let t = minimum thickness, in.

t_e = equivalent thickness of panel, in.

s = rib spacing, in.

If $t \le \frac{s}{4}$, fire endurance, R, is governed by t and is equal to R_t.

If $t \ge \frac{s}{2}$, fire endurance, R, is governed by t_e and is equal to R_{te}.

If $\frac{s}{2} > t > \frac{s}{4}$:

$$R = R_t + \left(\frac{4t}{s} - 1\right)\left(R_{te} - R_t\right) \qquad \text{(Eq. 5.7.1)}$$

where R is the fire endurance of a concrete panel and subscripts t and t_e relate the corresponding R values to concrete slab thicknesses t and t_e, respectively.

Fig. 5.7.3 Cross section of ribbed wall panels.

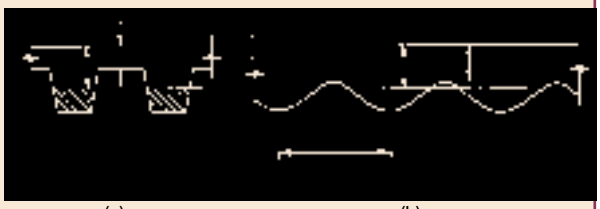

(a) (b)

These expressions apply to ribbed and corrugated panels, but they give excessively low results for panels with widely spaced grooves or rustications. Consequently, engineering judgment must be used when applying the above expressions.

Sandwich panels have insulating materials between the two wythes of concrete (see Section 5.3.8). Building codes require that, where non-combustible construction is specified, combustible elements in walls be limited to thermal and sound insulation having a flame-spread index of not more than 100, except it should not exceed 75 for foam plastic insulation when the insulation is sandwiched between two layers of non-combustible material such as concrete. When insulation is not installed in this manner, it is required to have a flame-spread index of not more than 25. Data on flame-spread classification are available from insulation manufacturers.

It should be noted that the cellular plastics melt and are consumed at about 400 to 600 °F (205 to 316 °C). Thus, thickness greater than 1.0 in. (25 mm) or changes in composition probably have only a minor affect on the fire endurance of sandwich panels. The danger of toxic fumes caused by the burning of cellular plastics is practically eliminated when the plastics are completely encased within concrete sandwich panels. It is possible to calculate the thicknesses of various materials in a sandwich panel required to achieve a given fire rating using Equation 5.7.2.

$$R^{0.59} = R_1^{0.59} + R_2^{0.59} \ldots R_n^{0.59} \qquad \text{(Eq. 5.7.2)}$$

where R = fire endurance of the composite assembly in minutes and R_1, R_2, and R_n = fire endurance of each of the individual courses in minutes.

Table 5.7.5 lists fire endurances for insulated precast concrete sandwich panels with either cellular plastic, glass fiber board, or insulating concrete used as the insulating material. The values were obtained using Eq. 5.7.2. A design graph for solving the equation is provided (Fig. 5.7.4).

Window walls that are required to be fire resistive have limits imposed on the area of openings by the building code. These limits are based on the construction classification, occupancy, spatial separation (distance between a building and its neighbor or property line), and fire zone. For example, Table 704.8 of the

Table 5.7.5 Fire Endurance of Sandwich Panels.

Inside Wythe, in.	Insulation, in.	Outside Wythe, in.	Fire Endurance, hr:min
1½ Sil	1 CP	1½ Sil	1:23
1½ Carb.	1 CP	1½ Carb.	1:23
1½ SLW	1 CP	1½ SLW	1:45
2 Sil	1 CP	2 Sil	1:50
2 Carb.	1 CP	2 Carb	2:00
2 SLW	1 CP	2 SLW	2:32
3 Sil	1 CP	3 Sil	3:07
1½ Sil	¾ GFB	1½ Sil	1:39
2 Sil	¾ GFB	2 Sil	2:07
2 SLW	¾ GFB	2 SLW	2:52
2 Sil	¾ GFB	3 SLW	3:10
1½ Sil	1½ GFB	1½ Sil	2:35
2 Sil	1½ GFB	2 Sil	3:08
2 SLW	1½ GFB	2 SLW	4:00
1½ Sil	1 IC	1½ Sil	2:12
1½ SLW	1 IC	1½ SLW	2:39
2 Carb	1 IC	2 Carb	2:56
2 SLW	1 IC	2 SLW	3:33
1½ Sil	1½ IC	1½ Sil	2:54
1½ SLW	1½ IC	1½ SLW	3:24
2 Sil	1½ IC	3 Sil	4:16
2 Sil	2 IC	2 Sil	4:25
1½ SLW	2 IC	1½ SLW	4:19

Note: Carb = carbonate aggregate concrete; Sil = siliceous aggregate concrete; SLW = sand-lightweight concrete (115 pcf maximum); CP = cellular plastic (polystyrene or polyurethane); GFB = glass fiber board; IC = lightweight insulating concrete (35 pcf maximum).

Fig. 5.7.4 Design aid for use in solving Eq. 5.7.2.

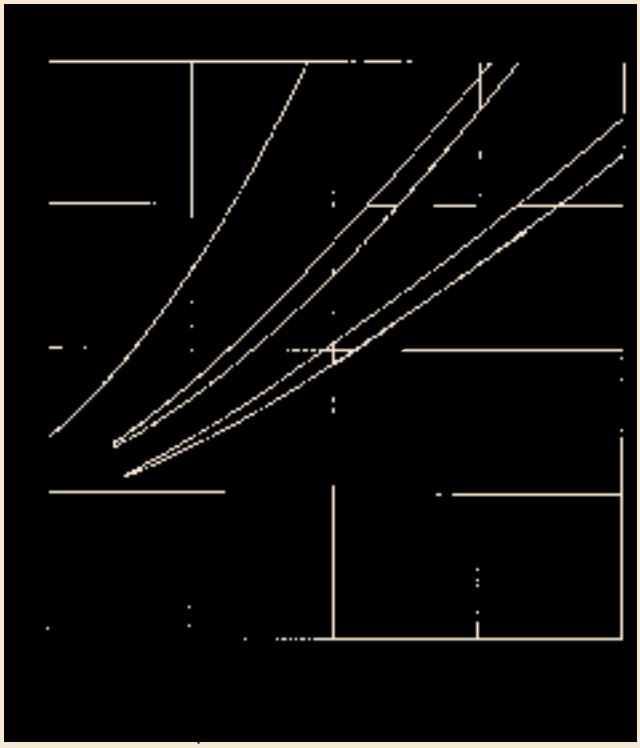

R^1 MINUTES	$R^{0.59}$
60	11.20
120	16.85
180	21.41
240	25.37

MATERIAL	$R^{0.59}$
cellular plastic (1 in. or thicker)	2.5
3/4 in. glass fiber board	4.0
1 1/2 in. glass fiber board	8.5
continuous air space	3.33
two continuous air spaces	6.67
2 in. foam glass	10.6
1/2 in. gypsum wallboard	7.44
5/8 in. gypsum wallboard	8.49

IBC permits no unprotected openings in exterior walls when the spatial separation is less than 5 ft (1.5 m) or less than 3 ft (0.9 m) for protected openings. Exterior protected openings (covered in IBC Section 715) required to have a fire-resistance rating of greater than 1 hour are to be protected with an assembly having a fire-protection rating of not less than 1.5 hours. If required fire-resistance rating is 1 hour, then the assembly can have a fire-protection rating of not less than 45 minutes.

For buildings that are three stories or more in height, openings in exterior walls in adjacent stories are to be separated vertically to protect against fire spread on the exterior of the buildings where the openings are within 5 ft (1.5 m) of each other horizontally and the opening in the lower story is not a protected opening. Such openings are to be separated vertically by at least 3 ft (1 m) by spandrel girders, exterior walls, or other similar assemblies that have a fire-resistance rating of at least 1 hour or by flame barriers having a fire-resistance rating of at least 1 hour that extends horizontally at least 30 in. (762 mm) beyond the exterior wall.

Requirements for various occupancies differ somewhat but generally follow the same pattern and certain exceptions often apply. The IBC code relates spatial separation and maximum area of unprotected openings to the area of the exposed building face. Percentages of unprotected opening areas are then tabulated in the code for various combinations of area of building face and spatial separation. The percentage of openings permitted increases as the spatial separation increases. IBC also permits a higher limit on the unexposed surface temperature if the area of unprotected openings is less than the maximum allowed and, thus, somewhat thinner panels can be used. An equivalent opening factor, F_{eo}, is then applied in a formula to determine the corrected area of openings:

$$A_e = A + A_f F_{eo} \qquad \text{(Eq. 5.7.3)}$$

where

A_e = equivalent area of protected openings.

A = actual area of protected openings

A_f = area of exterior surface of the exposed building

face exclusive of openings, on which the temperature limitation of the standard fire test is exceeded.

Figure 5.7.5 shows the relation between F_{eo} and panel thickness for three types of concrete.

To illustrate the use of Fig. 5.7.5, suppose that for a particular building face, a 2-hour fire-resistance rating is required and the area of unprotected openings permitted is 57%. Suppose also that the actual area of unprotected openings is 49% and that the window wall panels are made of carbonate aggregate concrete. Determine the minimum thickness of the panel.

In this case: A_c = 57%,

A = 49%, A_f = 100-49 = 51%,

hence:

$$F_{eo} = \frac{A_c - A}{A_f} = \frac{57 - 49}{51} = 0.16$$

From Fig. 5.7.5, for F_{eo} = 0.16 at two hours, the minimum panel thickness is 2.3 in. (33 mm). Thus, if the panel is 2.3 in. (33 mm) thick or thicker, the code requirements will be satisfied.

When a horizontal member pockets into a wall, reducing thickness (t) by half, there are several ways to approach the fire rating of the wall. One approach is to consider the reduction in wall thickness the same as an opening which would occur with complete through penetration.

1. Unless the wall is very close to the property line, openings are permitted. If protection is needed, then 45 minutes is all that is required. It will take only about 3 in. (75 mm) of concrete to get a 45-minute rating, so this should present no problem.
2. If the wall is far enough off property line, 5 ft (1.5 m) or more, so that opening protection is not required, nothing needs to be done. Table 704.8 of the IBC allows for unprotected openings not to exceed 10% of the total wall area, a number that would never be realized.
3. If the wall is close to the property line, within 5 ft (1.5 m), then openings may not be allowed. This could require restoring the pocket to its original fire rating by applying a fire-resistive spray, inserting various fire-retardant materials, or moving the pocket to the opposite wall (using a corbel or ledge instead of a pocket).

5.7.3 Detailing of Fire Barriers

One of the purposes of code provisions for fire-resistive construction is to limit the involvement of a fire to the room or compartment where the fire originates. Thus, the floors, walls, and roof surrounding the compartment must serve as fire barriers.

Fig. 5.7.5 Equivalent Opening Factor, F_{eo}.

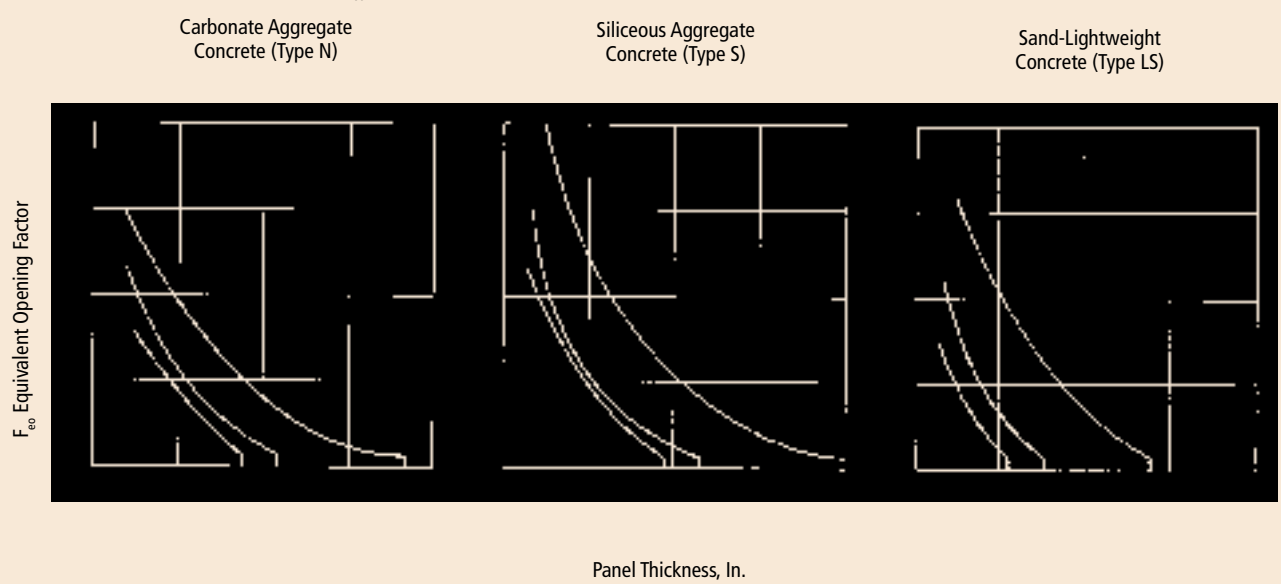

IBC requires that firewalls start at the foundation and extend continuously through all stories to and above the roof, except where the roof is of fire-resistive construction, in which case the wall must be tightly fitted against the underside of the roof. If the roof and walls are of combustible construction, firewalls must extend not only through the roof, but must extend through the sides of the building beyond the eaves or other combustible projections.

When precast concrete wall panels are designed and installed such that no space exists between the wall panel and floor, a fire below the floor cannot pass through the joint between the floor and wall. However, some wall panels are designed such that a space does exist, a space referred to as a "safe-off" area.

Figure 5.7.6 shows a method of fire stopping such safe-off areas. Safing is supported on a steel angle, with or without Z-shaped impaling pins, depending on gauge of steel angle. Safing insulation is available as mineral fiber mats of varying dimensions and densities.

The mineral fiber should be sealed with a firestop caulk. Care must be taken during installation to ensure that the entire safe-off area is sealed. The safing insulation provides an adequate firestop and accommodates differential movement between the wall panel and the floor. See Section 5.5.8 for a discussion on the acoustical isolation effects of this treatment.

Fig. 5.7.6 Methods of installing safing insulation.

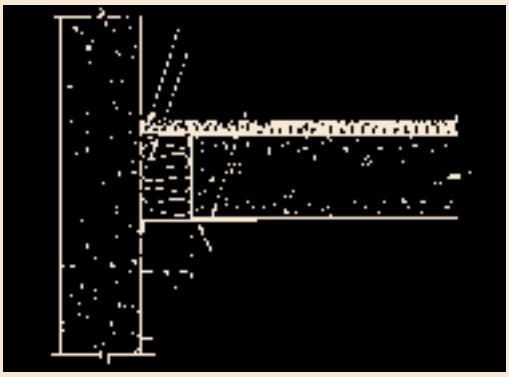

5.7.4 Columns and Column Covers

Reinforced precast concrete columns have for many years served as the standard for fire-resistive construction. Indeed, the performance of concrete columns in actual fires has been excellent.

The inherent fire resistance of concrete columns results from three factors:

1. Minimum size of a structural column is generally such that the inner core of the column retains much of its strength even after long periods of fire exposure.
2. Concrete cover to the primary reinforcing bars is generally $1^7/_8$ in. or more, thus providing considerable fire protection for the reinforcement.
3. Ties or spirals contain the concrete within the core.

Table 5.7.6. Minimum Sizes of Concrete Columns.

	Minimum Column Size for Fire Resistance Rating, in.				
Aggregate type	1 hr	$1^1/_2$ hr	2 hr	3 hr	4 hr
Siliceous	8	9	10	12	14
Carbonate	8	9	10	11	12
Sand-Lightweight	8	$8^1/_2$	9	$10^1/_2$	12

Table 5.7.6 shows typical building code requirements for reinforced concrete columns, and the values shown apply to both precast and cast-in-place concrete columns. In addition, they apply to cast-in-place concrete columns clad with precast concrete column covers, whether the covers serve merely as cladding or as forms for the cast-in-place column.

Precast concrete column covers are often used to clad steel columns for architectural reasons. Such covers also provide fire protection for the columns. Figure 5.7.7 shows the relationship between the thickness of a concrete column cover and the fire endurance for various steel column sections. The fire endurances shown are based on an empirical relationship. It was also found that the air space between the steel core and the column cover has only a minor affect on the fire endurance. An air space will probably increase the fire endurance but by an insignificant amount.

Most precast concrete column covers are 3 in. (75 mm) or more in thickness, but some are as thin as $2^1/_2$ in. (63 mm). From Fig. 5.7.7, it can be seen that such column covers provide fire endurances of at least 2.5

Fig. 5.7.7 Fire endurance of steel columns afforded protection by concrete column covers.

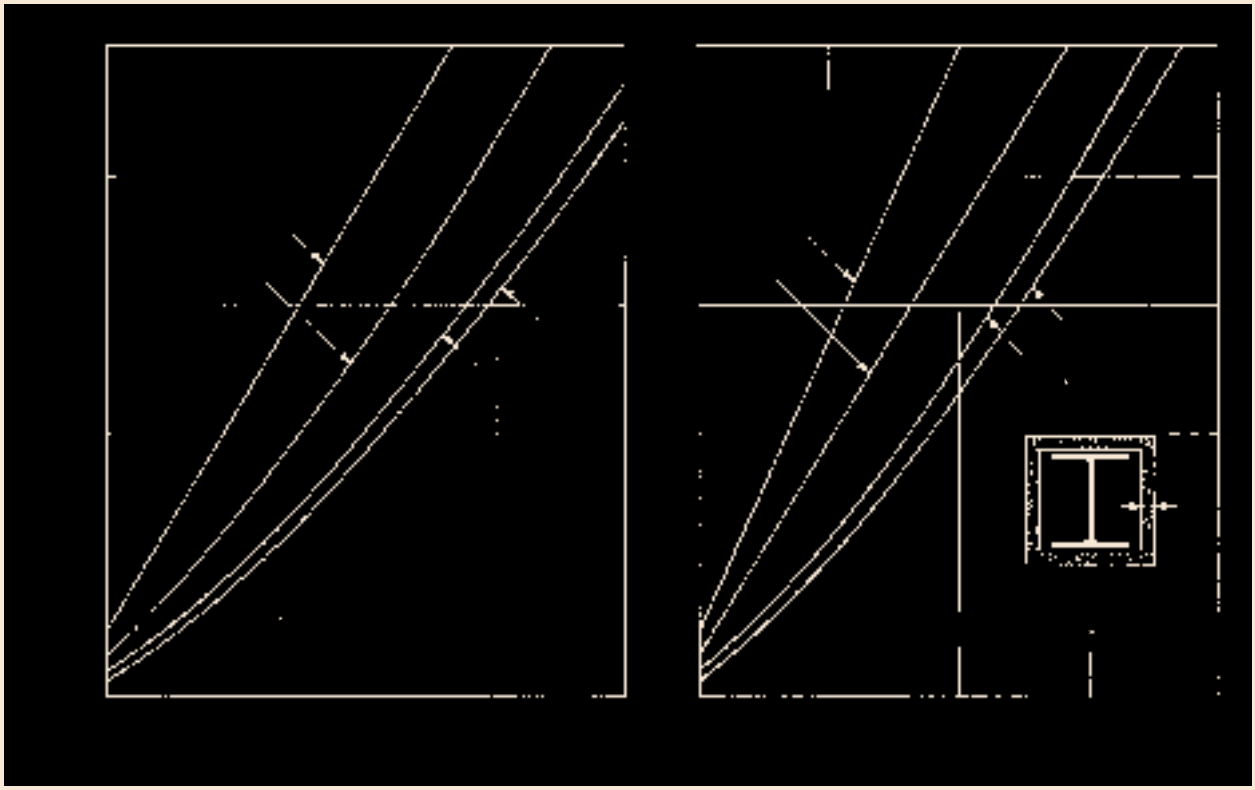

Fig. 5.7.8 Types of column covers.

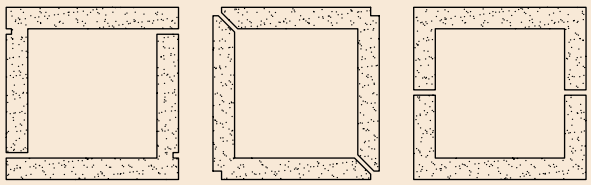

hours and usually more than 3 hours. For steel column sections other than those shown, including shapes other than wide flange beams, interpolation between the curves on the basis of weight per foot will generally give reasonable results.

For example, the fire endurance afforded by a 3 in.-thick (75mm) column cover of normalweight concrete for an 8 × 8 × $^1/_2$ in. (200 × 200 × 13 mm) steel tube column will be about 3 hours 20 minutes (the weight of the section is 47.35 lb/ft [691 N/m]).

Figure 5.7.8 displays some of the various shapes of precast concrete column covers, including (a) two L-shaped units, (b) two mitered units, and (c) two U-shaped units. There are, of course, many other combinations that may be used to accommodate isolated columns, corner columns, and columns in walls.

To be fully effective, the column covers must remain in place without severe distortion. Many types of connections are used to hold the column covers in place. Some connections consist of bolted or welded clip angles attached to the tops and bottoms of the covers. Others consist of steel plates embedded in the covers that are welded to angles, plates, or other shapes which are, in turn, welded or bolted to the steel column. In any case, these connections are used primarily to position the column covers and as such, are not highly stressed. As a result, temperature limits do not need to be applied to the steel in most column cover connections.

If either partially or fully restrained, concrete panels tend to deflect or bow when exposed to fire. For example, for a steel column that is clad with four flat panels attached top and bottom, the column covers

will tend to bulge at mid-height, opening gaps along the sides. The gap sizes decrease as the panel thicknesses increase.

With L-, C-, or U-shaped panels, the gap size is further reduced. The gap size can be further minimized by connections installed at mid-height. In some cases, shiplap joints can be used to minimize the effects of joint openings.

Joints should be sealed to prevent the passage of flame to the steel column. A non-combustible material, such as sand-cement mortar, or a ceramic-fiber blanket can be used to seal the joint and then caulking is applied.

Precast concrete column covers should be installed in such a manner that if they are exposed to fire, they will not be restrained vertically. As the covers are heated, they tend to expand, and the connections should accommodate this expansion without subjecting the cover to additional loads. For this reason, the precast concrete column covers should not be restrained vertically. Fire-resistive compressible materials, such as mineral fiber safing, can be used to seal the tops or bases of the column covers, permitting the column covers to expand without restraint. Similarly, the connections between the covers and columns should be flexible (or soft) enough to accommodate thermal expansion without inducing much stress into the covers.

5.7.5 Protection of Reinforcing Steel

For the purpose of establishing fire ratings, the codes currently do not address cover for the reinforcing steel in walls, an oversight that will, perhaps, be remedied in the near future. The codes do require that the serviceability requirements be met by providing adequate cover for protection against weather and other effects. Because of these precautions and the proven performance of concrete walls in real fires, it appears that these requirements furnish the necessary cover demanded for fire ratings. It is recommended that for fire ratings of 1 hour through 4 hours, concrete cover be furnished as specified in ACI 318, Section 7.7.3. It is also recommended that regardless of the type of aggregate used in the concrete, the minimum thickness of concrete cover to the main longitudinal reinforcement should not be less than 1 in. (25 mm) times the number of hours of required fire resistance, or 2 in. (50 mm), whichever is more.

5.7.6 Protection of Connections

Fireproofing of connections may be necessary, depending on codes and/or insurance requirements. In many cases, fireproofing with concrete cover will also provide corrosion protection. Many types of connections in precast concrete construction are not vulnerable to the effects of fire and, consequently, require no special treatment. For example, direct bearing areas between precast concrete panels and footings or beams that support them do not generally require any special fire protection, nor do concrete haunches.

If the panels rest on elastomeric pads or other combustible materials, protection of the pads is not generally required because pad deterioration will not cause collapse. Nevertheless, after a fire, the pads would probably have to be replaced, so protecting the pads might prevent the need for replacement. If the connections are to be fireproofed or concealed, this fact should be indicated in the contract documents.

Connections that can be weakened by fire and thereby jeopardize the structure's load-carrying capacity should be protected to the same degree as that required for the structural frame. If, for example, when an exposed steel bracket supports a precast concrete element that is required to have a designated fire rating, the steel bracket must be protected to the same fire rating.

Many connections simply provide stability and are under little or no stress in service. While fire could substantially reduce the strength of such a connections, no fire protection is necessary. Connections that have steel elements encased in concrete, drypacking, or grout after erection usually need no additional protection.

There is evidence that exposed steel hardware used in connections is less susceptible to fire-related strength reduction than other steel members. This is because the concrete provides a "heat sink," which draws off the heat and reduces the temperature of the steel.

Fireproofing of connections is usually accomplished with sprayed cementitious or mineral fiber fireproofing, intumescent mastic compounds, or enclosure with gypsum wallboard.

Figure 5.7.9(a) shows the thicknesses of various, commonly used, fire-protection materials required for fire endurances up to four hours when applied to connections consisting of structural steel shapes. The values shown are based on a critical steel temperature

Fig. 5.7.9(a) & (b) Thickness of protection materials applied to connections consisting of structural steel shapes. (IM = intumescent mastic, SMF = sprayed mineral fiber, VCM = vermiculite cementitious material).

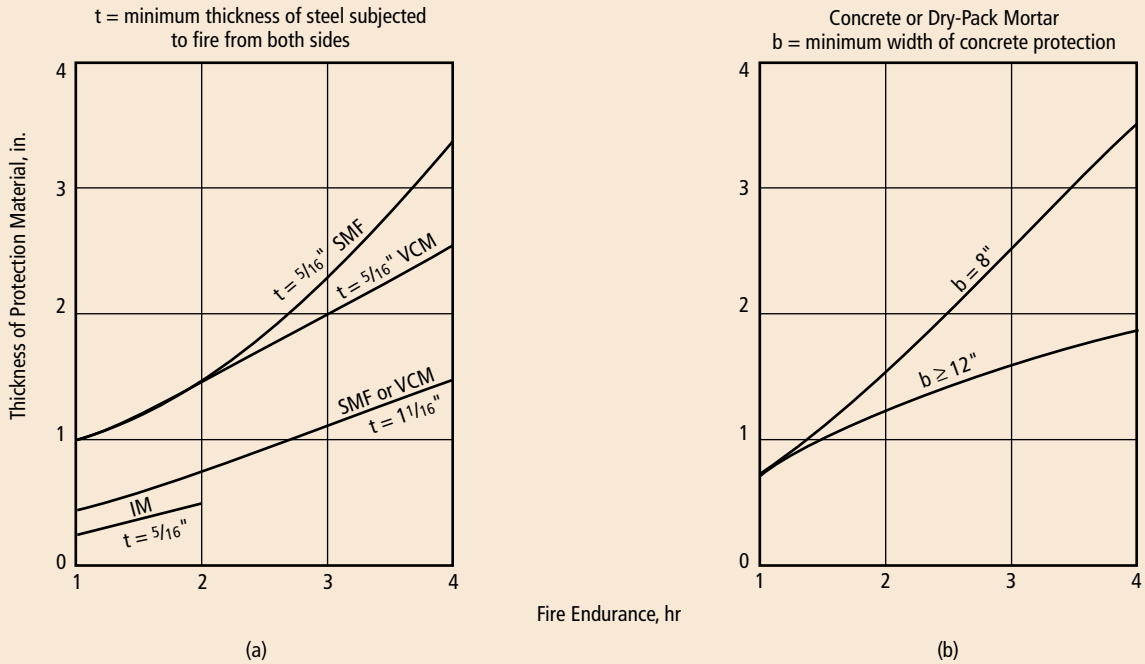

of 1000 °F (538 °C) (that is, a stress-strength ratio of about 65%). The values in Fig. 5.7.9(b) are applicable to concrete or drypack mortar encasement of structural steel shapes used as brackets.

When a rational analysis or design for fireproofing is not performed and concrete is used to fireproof the connections in the field, a conservative estimate would suggest that such concrete should have a thickness in inches corresponding to the specified hours of fire rating. Unless the nature of the detail itself supports such concrete, it should be reinforced with a light wire fabric.

5.8 ROOFING

5.8.1 General

The most vulnerable parts of any roof system, relative to leaks, are the interfaces between the horizontal roof surface and vertical surfaces and penetrations. Therefore, designers should carefully consider the design of flashing details at these locations and at system terminations. Flashings are as important to the performance of a low-slope roof as the membrane selected, the installation method used, and the quality of the work. Refer to the NRCA Construction Details in the *NRCA Roofing and Waterproofing Manual* for industry accepted recommended practices.

Three major considerations govern the detailing of roofing adjoining precast concrete units:

1. Relative movement between the roof deck and the precast concrete panels should be assessed by the designer, and allowances made to accommodate this movement with flashing, counterflashing, and expansion joints.
2. Hardware required in the precast concrete should be detailed and located to tolerances stated on the working drawings and selected to suit the particular conditions.
3. Details should reflect involvement of the minimum number of trades, ensuring that the work of each trade can be completed independently of the others.

5.8.2 Flashing

The basic elements of flashing design apply to all types

Fig. 5.8.1 Counter flashing for concrete wall or parapet.

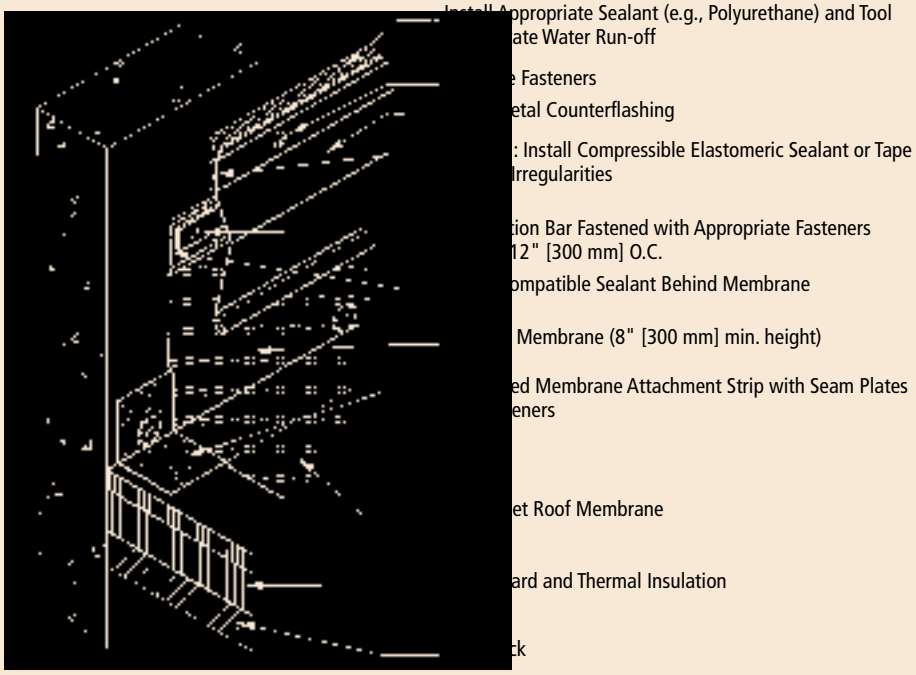

of roofs. **Base flashing** is a continuation of the roofing membrane that is typically applied separately from the field application. The flashing components, made of roof membrane and sheet metal, include cap flashing or counterflashing, which is applied to shield the exposed portions of the top edge of base flashing or to extend into the wall to divert any interior water to the exterior of the wall. **Metal copings** are the preferred method to seal and waterproof the top of a parapet or building wall. **Edge flashings** (gravel stops) are used to terminate roofing membrane and hold the gravel in place on a ballasted roof or to finish off the edge of other types of roof. **Expansion joints** are structural separations that accommodate movement between two building elements, or at specific locations, such as where the roof deck changes direction. **Roof scuppers** provide an exit for water through a parapet wall or an elevated edge. Each of these flashing components requires equal design consideration.

The details in this section depict jobsite fabricated construction. Many roofing material manufacturers now offer prefabricated flashing pieces or permit the use of materials for flashing purposes other than those shown here. Specifics on these proprietary designs vary greatly. Therefore individual roofing material manufacturers should be consulted when proprietary designs are used. Terminations of built-up roofing, which do not allow for movements, such as spandrel beam and deck deflections, at horizontal/vertical transitions can lead to water entry paths at the roof/wall panel interface. A common detail for application of a single-ply roof is shown in Fig. 5.8.1. The figure indicates only the edge of the roof and refers only to materials directly affecting the precast concrete details.

Single-ply membrane systems have evolved along several lines. Thermoplastic sheets such as polyvinyl chloride (PVC) and thermoplastic olefin (polyolefin) (TPO) are typically internally reinforced with a scrim or fabric and are generally seamed by hot-air welding. Ethylene propylene diene monomer (EPDM) membranes are thermoset sheets, which are often reinforced and the seams glued or taped. When single-ply membranes are returned vertically on the back of precast concrete panels to act as flashing, the back surface of the panel must be given a smooth trowel finish. Surface irregularities may puncture or tear the roofing membrane.

Fig. 5.8.2(a – c) Typical roof flashing details.

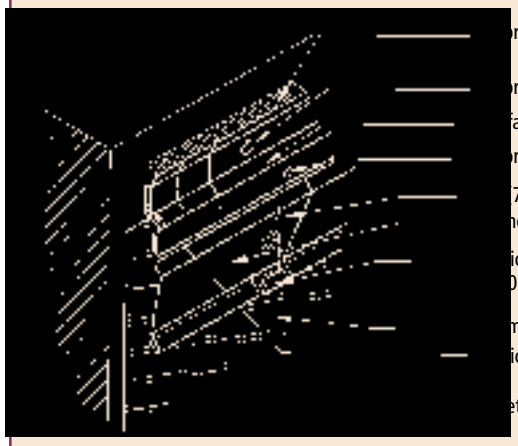

ropriate Sealant Tooled to Facilitate Run-off

ropriate Fasteners 12" [300 mm] O.C.

ace Mounted Sheet Metal Receiver

ropriate Fasteners 24" [600 mm] O.C.

75 mm] Lap at Joints

ovable Sheet Metal Counterflashing

ional: 2" [50 mm] Wide Clip approx. 30"
0 mm] O.C. – 2 Fasteners per Clip

mbrane Base Flashing

ional: Sealant or Elastomeric Tape

et and Counterflashing

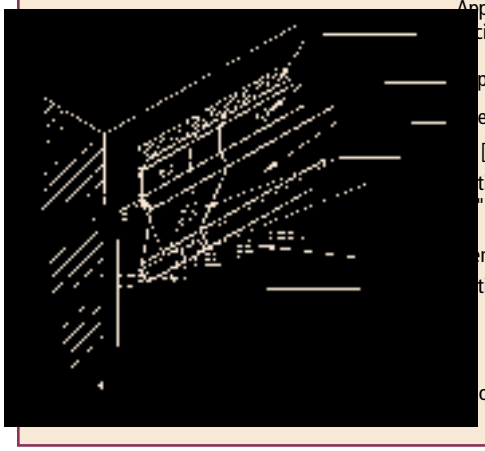

Appropriate Sealant Tooled to
cilitate Run-off

propriate Fasteners 12" [300 mm] O.C.

e-piece Sheet Metal Counterflashing

[75 mm] Lap at Joints

tional: 2" [50 mm] Wide Clip approx.
" [750 mm] O.C. – 2 Fasteners per Clip

embrane Base Flashing

tional: Sealant or Elastomeric Tape

ounterflashing

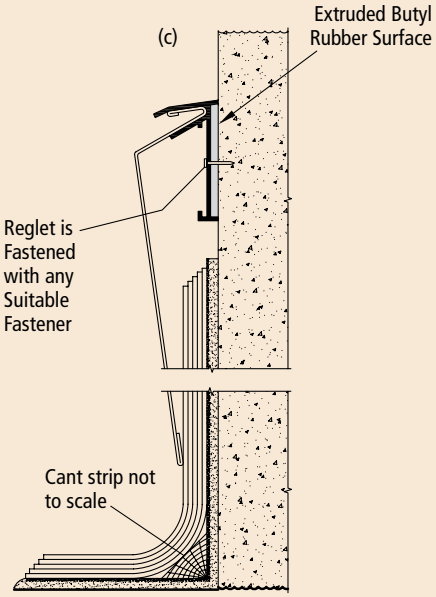

Alternate Method of Attaching Counterflashing

The bending radius of built-up or modified roofing materials is generally limited to 45 deg. To allow for this bending radius, all vertical surfaces must have cant strips installed between the roof and the vertical surface. The base flashing should extend vertically, from the horizontal plane of the roof, at least 8 in. (200 mm). Walls requiring protection higher than 8 in. (200 mm) should receive different moisture-proof detailing. A wood nailer strip fastened to the roof deck (not the wall) or suitable detail allowing mechanical fastening of the membrane base flashing must be provided. Since metals have a high coefficient of expansion, metal flashings and panel connections must be isolated from the roof membrane wherever possible to prevent thermal movements of the metal from splitting or tearing the membrane.

For all walls and projections that receive membrane base flashing, metal counterflashings should be installed on the wall above the base flashing (Fig. 5.8.2). An alternate method of attaching the counterflashing is shown in Fig. 5.8.2(c). The design of this detail should be two-piece (reglet and counterflashing), allowing installation of the counterflashing after the base flashing is completed. Single-piece installations are difficult to flash properly. Also, it is difficult to perform re-roofing and roofing maintenance without deforming the metal when single-piece installations are used. Sheet metal should never be used as a base flashing.

The roof to wall junction detail is one of the most frequent areas of failure. The major reason is the failure to accommodate differential movements caused by temperature changes, moisture changes, building frame movement, and wind. Especially important is the live load imposed by snow, or retained rainwater.

Differential movement of material components at roof-to-wall junctions can cause wrinkling and buck-

Fig. 5.8.3(a) & (b) Low parapet details.

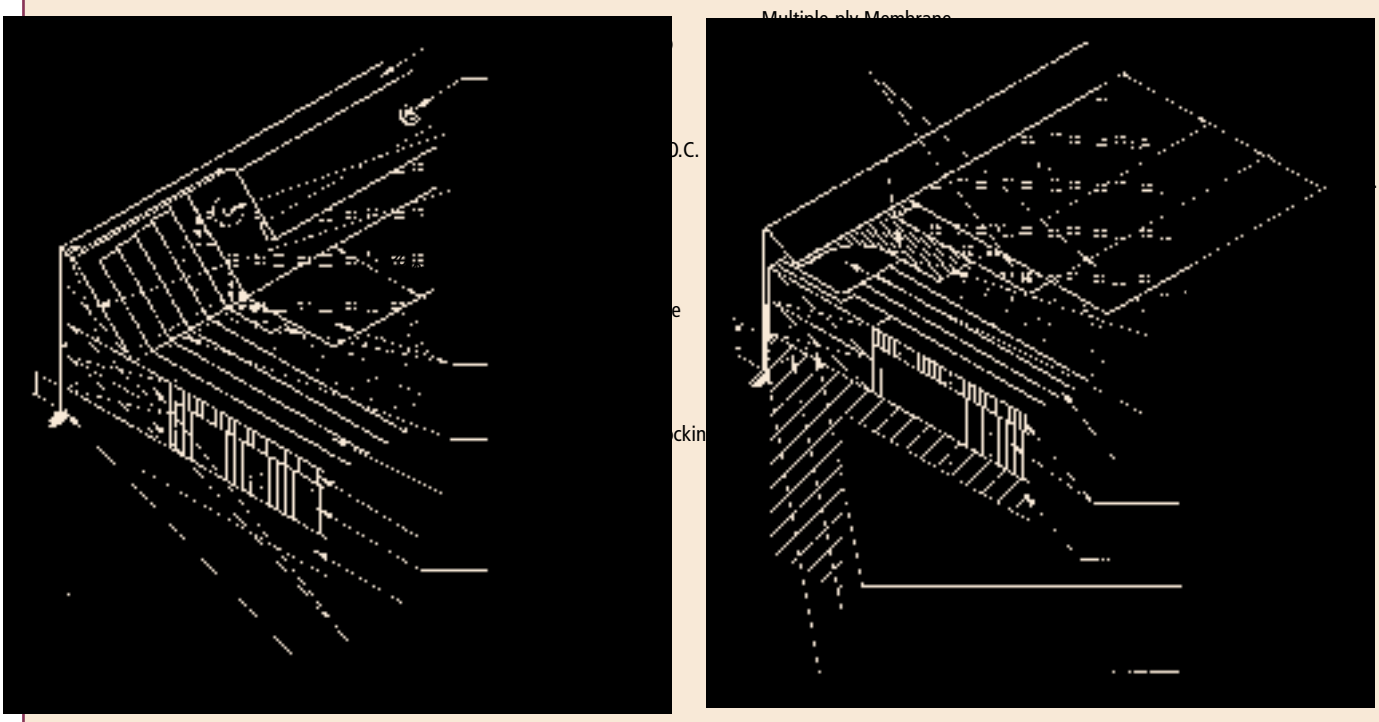

ling, delamination, loss of adhesion, and open seams in flashing membranes. Flashing membranes subjected to differential wall-to-roof movement can separate from their substrate, tear, and become a source for water entry into the roof system and/or building interior. NRCA recommends that designers create flashing details that can accommodate separate roof-to-wall movement when excessive movement between a roof and wall is anticipated. This condition may occur where a roof deck is not supported by a wall. Typically, a perimeter expansion joint at the wall or cornice-to-roof system will accommodate this differential movement. Some preformed proprietary roofing material shapes allow direct fastening to precast concrete, even when moderate movements are expected.

The roofing edge detail must be able to accommodate any relative vertical and/or horizontal movement between the wall and roof to prevent rupture of membrane roofing. The lateral connection (tieback) from the wall to the roof member should be a slotted insert with a threaded flat bar welded or bolted to the roof member to allow for differential movement.

The major requirement for a reglet is strict adherence to close tolerances in placing the reglet. The precaster may overlook this requirement unless clearly stated in the contract documents (see tolerances given in Section 4.6.2). Cast-in reglets are often difficult to align properly due to erection tolerances. When not properly aligned, they can hinder the proper installation of counterflashing. Therefore, the use of cast-in-reglets is generally not recommended because of the difficulty in maintaining tolerance in panel fabrication and erection.

The method of fastening the roofing membrane to the precast concrete units varies with local practices. Some roofers favor a continuous wood nailer, which alleviates the need to fasten into concrete. The extra cost to the precaster to incorporate a wood nailer into the precast concrete should be reflected in equal or greater savings in the roofing contract.

5.8.3 Parapet Details

For low parapet walls, the base flashing should be fastened to a vertical wood upright whose horizontal

base is attached to the deck only. After the base flashing has been attached to the wood upright, the metal wall cap flashing may be installed. Then the counterflashing may be attached to the wall cap, extending down over the top of the base flashing. This method allows lateral movements of the wall without damage to the base flashing.

Where gravel stops are used, they should be raised above the roof surface using tapered cants and wood blocking (Fig. 5.8.3 [a]). When this is not possible, the metal flanges for low-profile gravel stops should be set in mastic on top of the completed roof membrane and fastened at close intervals to the wood nailer. A flashing strip is then applied over the gravel stop edge. Interior drainage of a roof is recommended, therefore edges should be raised whenever possible. In the single-ply detail, prefabricated metal is used in place of the angular wood cant (Fig. 5.8.3[b]). The metal is fastened to a flat 2 × 6 in. (50 × 150 mm) nailer, and the membrane is fastened to the nailer and then flashed.

Parapet panels and connections should be designed to withstand window-washing equipment loads in any direction and at any point along the top edge of the parapet. Parapet and roof edges should be designed to avoid run-off from flat roofs onto the building façade. A parapet of sufficient height (8 to 12 in. [200 to 300 mm]) will normally prevent water on the roof from blowing over the parapet onto the face of the building. The top of the parapet should slope backward toward the roof for its full width and be narrow so that dirt accumulating on them does not cause streaking on

Fig. 5.8.4 Diagram of parapet profile.

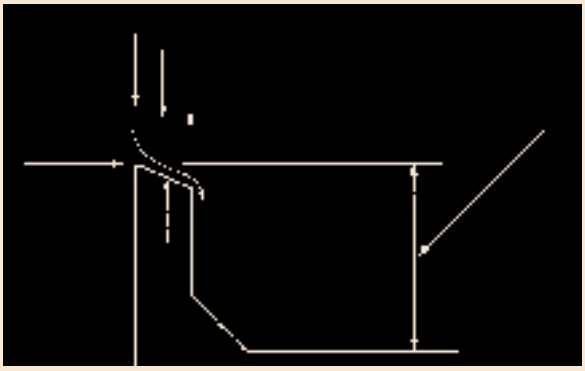

Fig. 5.8.5 Alternate coping securements.

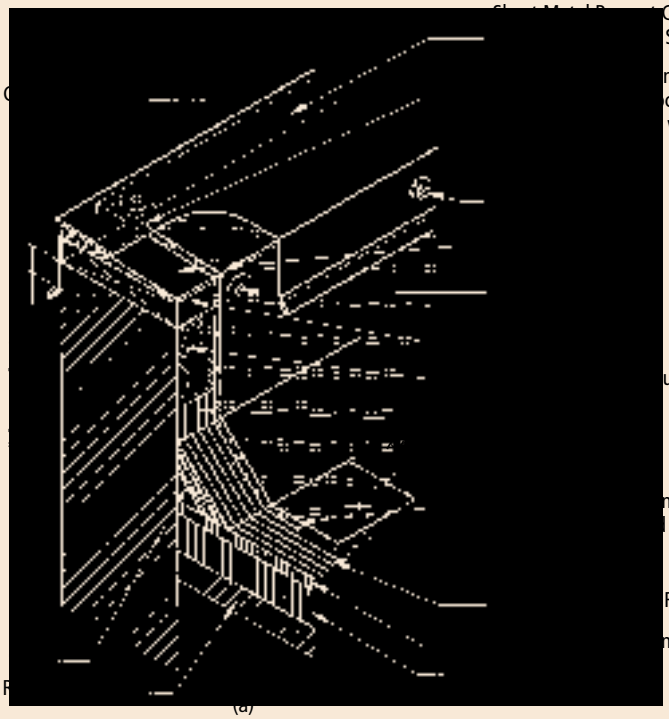

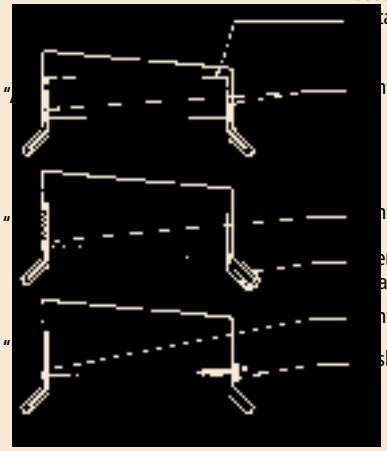

the building face when washed off (Fig. 5.8.4). A continuous tapered shim installed over the wood blocking is a common method of sloping the top of the wall to the roof side. Alternatively, a sloped top edge on the precast concrete panel could be used.

Parapet walls must be adequately protected from moisture intrusion to prevent deterioration of the wall and damage to the roof system, building components, and interior. Copings are used to cover the top of a parapet wall and provide a weatherproof cap, which seals and protects the wall from moisture. Metal is one of the more common materials used for copings. Common metal types are galvanized or Galvalume steel®, standard or extruded aluminum, and copper. Lead coated copper and copper can cause staining of the face of the wall.

The parapet cap (flashing) should project at least 1 in. (25 mm) beyond the vertical wall surfaces and have a proper drip edge to throw run-off water clear of the wall. Projections of less than 1 in. may permit water to either flow back or be blown back against wall surfaces. It is important that the flashing is installed straight and level and without gaps to avoid streaking from water run-off. The choice of flashing material and/or its treatment against corrosion should be based on preventing potential staining of the precast concrete surface (see Section 3.6.3).

When weather-tight joints, such as double-lock standing seams, are not installed, copings should have a continuous sheet membrane under the coping or the roof flashing should be installed to run up and over the parapet wall under the coping. These materials should be capable of providing a secondary water barrier.

NRCA does not recommend caulking the joint between the bottom of the exterior vertical face of a coping cap or metal edge flashing and building exterior because it does not add to the waterproofing integrity of the assembly and it may, in fact, hinder the ability of the wall construction to dissipate moisture. However, the flashing must have sufficient lap (4 in. [100 mm] min.) over the wall material to prevent water from being blown under the coping or flashing during wind driven rain events.

There are three common methods for securing metal copings, which can be seen in Fig. 5.8.5. These methods are described as follows:

Option A: A continuous cleat is fastened on both the exterior and interior faces of the wall. The hem at the drip edge of the coping metal on the interior side should be fabricated slightly open for ease of application. After the exterior face of the coping is hooked to the cleat, the interior face (roof side) is secured by crimping the open hem of the coping to the cleat.

Fig. 5.8.6 Alternate parapet and roofing details.

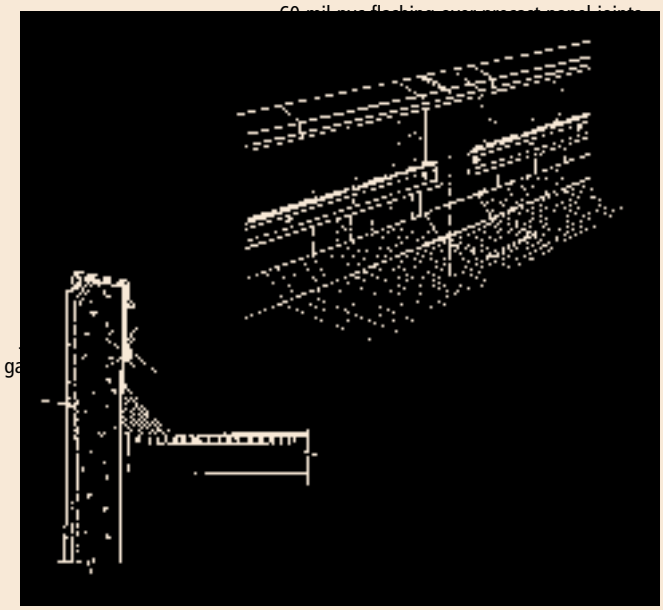

Option B: A continuous cleat is fastened to the exterior face of the wall, and clips are installed intermittently on the interior face (roof side) of the wall. After the exterior face of the coping is hooked to the cleat, the interior face (roof side) is secured by engaging the clips to the bottom edge of the interior face of the metal coping.

Option C: A continuous cleat is fastened on the exterior face of the wall. After the exterior face of the coping is hooked to the cleat, the interior face (roof side) of the coping is secured to the parapet with gasketed fasteners.

The waterproofing of parapet joints is important because they are exposed to weathering from all directions and require regular checking for performance. Figure 5.8.6 shows a possible solution for joint and roofing details involving a precast concrete parapet joint and cap flashing. The metal cap flashing should have at least a 4 in. (100 mm) exposed apron extending down

Fig. 5.8.7 Through-wall scupper.

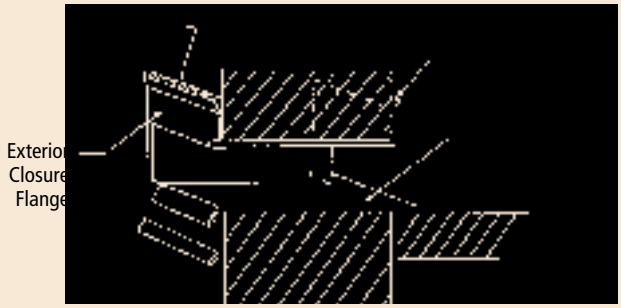

Fig. 5.8.8 Through-wall scupper with conductor head.

NOTES
— Conductor head to be a min. 1" (25 mm) below top of scupper liner.
— In areas where ice forms during winter conditions, the position of the conductor head relative to the scupper liner would allow for drainage above ice dam(s).

over the base flashing. In most cases the metal counterflashing is attached to the inside face of the metal wall cap flashing with sheet metal screws. The choice of flashing material and/or its treatment against corrosion should be based on preventing potential staining of the precast concrete surface (see Section 3.6.3).

If a two-stage joint is used, the sealant should be continued up the back of the parapet, along the top, and down the front to overlap the rain barrier. The top and back of the parapet normally receive a field-molded sealant to form a flush joint. In any solution using two-stage joints, it is important that the airseal closely abuts the roof seal to complete the building envelope.

If the panel-to-panel caulk joint of a precast concrete wall system fails, water intrusion behind the flashing will occur. Therefore, some designers extend the roofing system up the back of the precast concrete and over the top, covering the entire back of the panel including the panel-to-panel caulk joint. The roof termination is completed at the top with a metal, stone, or precast concrete coping piece to hide the termination.

Architects should be careful to consider the type and location of the precast concrete connections; frequently these connections can puncture the flashing. Working with the precast concrete engineer and roofing contractor during the shop-drawing connection phase helps avoid or minimize this problem. Also they should ensure that all precast concrete back surfaces above the roof line are smooth trowelled.

The intersection of the roof and the wall is a common site for discontinuities in the thermal insulation and air-barrier systems. The key issue for controlling air leakage is sealing the wall air barrier to the roofing membrane, and doing so in a manner that will accommodate the differential movement that generally occurs at this junction. To control condensation at this junction, the vapor retarder needs to be kept warm by a continuous layer of thermal insulation. Continuity of the thermal insulation and air barrier system also serves to control heat loss and reduces the potential for condensation occurring at this location.

5.8.4 Scuppers

Scuppers are typically installed at roof edges, either through the perimeter parapet wall or within a raised-edge design (Fig. 5.8.7 and 5.8.8). Scuppers can be the primary or secondary source of drainage; scuppers used as secondary drainage devices are called overflow scuppers. Either type of scupper can discharge water into a conductor head and downspout, be extended to allow unrestricted discharge of water, or can discharge water directly into a gutter. Typically, a through-wall scupper discharges into a conductor head and not a gutter, whereas an overflow scupper has unrestricted discharge. The conductor head should be wider than the scupper opening, and conductor heads should be attached to the wall securely with the appropriate fasteners (Fig. 5.8.8).

Where no conductor head and downspout are used, it is recommended that the precast concrete scupper liner be extended beyond the face of the wall. Extending the scupper liner and adding a drip edge will help prevent water from wicking back under the

Fig. 5.8.9(a) & (b) Scuppers.

scupper and into the wall or down the face of the wall. When a conductor head and downspout are not used it is important to consider the path of discharge and the effects this may have on the face of the wall and adjacent structures.

Good precast concrete scupper details are shown in Fig. 5.8.9(a) and (b). The scupper should be placed away from panel joints to keep water from running into these joints. If a collection box is used, the rim of the conductor head should be installed a minimum of 1 in. (25 mm) below the bottom opening of the scupper to assure that tolerances allow positive drainage of the roof under all conditions. Also, consideration should be given to the clearance necessary to accommodate tolerances of the roof slab depth, roof insulation, and roofing placement to allow proper drainage.

If the scupper is located within the panel face, a minimum blockout dimension of 6 in. (152 mm) is necessary in order to minimize the plugging of the opening.

Asp Avenue Parking Facility Norman, Oklahoma; Architect: Frankfurt-Short-Bruza Associates.

CHAPTER SIX
GUIDE SPECIFICATION
FOR ARCHITECTURAL PRECAST CONCRETE

6.1 GENERAL

This chapter provides a basis for specifying in-plant fabrication, including product design not shown on contract drawings, and field erection of architectural precast concrete. It does not address structural precast concrete, coatings, or sealing the joints between units.

6.2 DRAWINGS AND SPECIFICATIONS

6.2.1 Drawings

The Architect's or Engineer's drawings should show panel locations and necessary sections and dimensions to define the size and shape of the architectural precast concrete units, indicate the location and size of reveals, bullnoses, and joints (both functional and aesthetic), and illustrate details between panels and adjacent materials. When more than one type of panel material or finish is used, indicate the extent and location of each type on the drawings. The location and details of applied and embedded items should be shown on the drawings. Plans should clearly differentiate between architectural and structural precast concrete if both are used on the same project. The details of corners of the structure and interfacing with other materials should be illustrated. The aesthetic requirements and design loads should be identified, and load support points and space allowed for connections should be indicated. The Engineer of Record needs to be aware of the magnitude and direction of all anticipated loads to be transferred from the architectural precast concrete components to the building structural framing and their points of application. These loads should be addressed in the bid documents. It is especially critical that the Engineer of Record make provisions for stiffeners and bracing required to transfer the architectural precast concrete loads to the structural frame.

There should be no gaps between the specifications and drawings nor should they overlap; the specifications and drawings should be complementary.

6.2.2 Specifications

The type and quality of the materials incorporated into the units, the design compressive strength of the concrete, the finishes, and the tolerances for fabrication and erection should be described. In the event a performance specification is used appropriate data should be included for the precaster to assess the scope and quality of the precast concrete units to be fabricated.

Specifiers should consider permitting variations in production methods, structural design, materials, connection and erection techniques to accommodate varying plant practices. Specifying the results desired without specifically defining the manufacturing procedures will ensure the best competitive bidding. Required submittals should also include range-bracketing samples for color and texture.

The availability, quantity, performance, cost and production considerations of each ingredient and finish of architectural precast concrete can have a large impact on a project's schedule and budget. Therefore, they should be determined and specified for each specific project before the project specifications are released. The time and expense required to develop samples and select concretee colors and textures can be considerable and should not be underestimated by the design team.

The specification section should include requirements for connection components embedded in the precast concrete, related loose connection hardware, and any special devices for lifting or erection, if required. Items to be specified in other sections include building frame support provisions required to support units, including portions of connectors attached to the structure, joint sealing and final cleaning, and protection of the architectural precast concrete.

6.2.3 Coordination

The responsibility for supply of precast concrete support items to be placed on or in the structure in order to receive the architectural precast concrete units depends on the type of structure and varies with local practice. Clearly specify responsibility for supply and installation of pre-erection hardware. If not supplied by the precast concrete fabricator, list supplier and installation requirements in related trade sections.

The type and quantity of hardware items required to be cast into precast concrete units for the use of other

trades should be clearly specified. Specialty items should be required to be detailed, and supplied to precaster in a timely manner by the trade requiring them. Verify that materials specified in the section on flashing are galvanically compatible with cast in reglets or counterflashing receivers. Check that concrete coatings, adhesives, and sealants specified in other sections are compatible with each other and with the form release agents and surfaces to which they are applied.

Items mentioned in the Guide Specification as supply and/or installation by others should be mentioned in the specifications covering the specific trades. Such items may include:

- Cost of additional inspection by an independent testing laboratory, if required.
- Hardware for interfacing with other trades (window, door, flashing, and roofing items).
- Placing of precast concrete hardware cast into or attached to the structure, including tolerances for such placing.
- Joint treatment for joints between precast concrete and other materials.
- Access to building and floors.
- Power and water supply.
- Cleaning.
- Water repellent coatings.
- Plant-installed facing materials such as natural stone and clay products.

6.2.4 Guide Specification Development:

This Guide Specification developed by PCI, is based on MASTERSPEC® Section 034500 "Precast Architectural Concrete," and is used by permission of ARCOM. MASTERSPEC® is a product of the American Institute of Architects (AIA) and is exclusively produced and published by ARCOM on a licensed user basis. For further information, call 800-424-5080, or visit www.arcomnet.com.

6.3 TYPES OF SPECIFICATIONS

The most common form of an architectural precast concrete specification is by performance. The principal advantage of performance specifying over prescriptive is that it allows precasters to combine economy and optimum quality, utilizing established tooling and production techniques not envisioned by the architect or specifier.

Performance specifications define the scope of work by the results desired. For example, architectural precast concrete performance specifications will establish: (1) drawings that govern the design and arrangement of the various wall components; (2) quality of materials and types of finishes; (3) the loads and forces the wall panels are required to support; and (4) insulating and permeability requirements. In other words, they cover the aesthetic, functional, and structural requirements and define all limiting factors.

Performance specifications can achieve good results as long as the architect identifies the purpose to be served. Performance specifications often include appropriate quality control safeguards such as pre-qualification of precasters, pre-bid approval of materials and samples, careful review of shop drawings, and architect's approval of initial production units.

An alternative form of specifying is the prescriptive method. Prescriptive specifications typically contain inflexible and too stringent requirements that can adversely affect a project's budget and delivery schedule. An example of prescriptive specifying would be pre-engineered cladding systems. In this example an owner will engage a design firm to engineer a cladding system in order to shorten the time period necessary to design and develop project shop drawings.

Performance specifications may create additional work for the architect at the design stage, because the end result must be clearly defined and frequently multiple bid proposals must be assessed. The accepted proposal will eventually become the standard for manufacturing. However, this additional work in the early stages is generally offset by time saved later in detailing in the architect's office.

Performance specifications should define the scope (statement of needs) and quality of the precast concrete at an early project stage. With performance specifications, the manufacturer is responsible for selecting means and methods to achieve satisfactory results.

Properly prepared performance specifications should conform to the following criteria:

1. They should clearly state all limiting factors such as minimum or maximum thickness, depth, weight, tolerances, and any other limiting dimensions. Acceptable limits for requirements not detailed should be clearly provided. These limits may cover insulation (thermal and acoustical), interaction with other materials, services, and appearance.

2. They should be written so that the scope is clearly defined. Items both included and not included under the scope of the precast concrete work must be identified and cross-referenced in the project documents.

3. The architect should request samples, design and detail submissions from prospective bidders, and make pre-bid approval of such submissions a prerequisite for bidding.

4. If such requests for pre-bid approvals form a part of the specifications, the architect should adhere to the following:

a. Sufficient time must be allowed for the precaster to prepare and submit samples or information for approval by the architect. Approval should be conveyed to the manufacturer in writing with sufficient time to allow completion of an estimate and submittal of a bid.

b. All proprietary pre-bid submittals should be treated in confidence and the individual precaster's original solutions or techniques protected both before and after bidding.

6.4 Guide Specification

This Guide Specification is intended to be used as a basis for the development of an office master specification or in the preparation of performance specifications for a particular project. **In either case, this Guide Specification must be edited to fit the conditions of use**. Particular attention should be given to the deletion of inapplicable provisions or inclusion of additional appropriate requirements. Coordinate the specifications with the information shown on the Contract Drawings to avoid duplication or conflicts.

Shaded portions are Notes to the Specification Writer.

SECTION 034500

PRECAST ARCHITECTURAL CONCRETE

This Section uses the term "Architect." Change this term to match that used to identify the design professional as defined in the General and Supplementary Conditions of the contract. Verify that Section titles referenced in this Section are correct for this Project's Specifications; Section titles may have changed.

PART 1 – GENERAL

1.1 RELATED DOCUMENTS

A. Drawings and general provisions of the Contract, including General and Supplementary Conditions and Division 01 Specification Sections, apply to this Section.

1.2 SUMMARY

A. This section includes the performance criteria, materials, production, and erection of architectural precast concrete for the entire project. The work performed under this Section includes all labor, material, equipment, related services, and supervision required for the manufacture and erection of the architectural precast concrete work shown on the Contract Drawings.

Adjust list below to suit Project. Delete paragraph below if not listing type of units.

B. This Section includes the following:
1. Architectural precast concrete cladding **(and loadbearing**) units.
2. Insulated, architectural precast concrete units.
3. Clay product-faced, architectural precast concrete units.
4. Stone veneer-faced, architectural precast concrete units.

C. Related Sections include the following:

List below only products and construction that the reader might expect to find in this Section but are specified elsewhere. Other sections of the specifications not referenced below, also apply to the extent required for proper performance of this work.

1. Division 03 Section "Cast-in-Place Concrete" for installing connection anchors in concrete.
2. Division 03 Section "Glass-Fiber-Reinforced Concrete (GFRC)."
3. Division 04 Section "Exterior Stone Cladding" for furnishing stone facings and anchorages.
4. Division 04 Section "Cast Stone Masonry" for wet or dry cast stone facings, trim, and accessories.
5. Division 04 Section "Unit Masonry Assemblies" for full-thickness brick facing, mortar, inserts, and anchorages.
6. Division 05 Section "Structural Steel Framing" for furnishing and installing connections attached to structural-steel framing.
7. Division 05 Section "Metal Fabrications" for furnishing and installing loose hardware items, kickers, and other miscellaneous steel shapes.
8. Division 07 Section "Water Repellents" for water-repellent finish treatments.
9. Division 07 Section "Sheet Metal Flashing and Trim" for flashing receivers and reglets.
10. Division 07 Section "Joint Sealants" for elastomeric joint sealants and sealant backings.
11. Division 08 Section "Aluminum Windows" for windows set into architectural precast concrete units.
12. Division 09 Section "Tiling" for ceramic tile setting materials and installation.
13. Division 11 Section "Window Washing Equipment" for tie-backs located in architectural precast concrete units.

1.3 DEFINITION

Retain paragraph below if a design reference sample has been preapproved by Architect and is available for review.

A. Design Reference Sample: Sample of approved architectural precast concrete color, finish and texture, preapproved by Architect.

1.4 PERFORMANCE REQUIREMENTS

Retain this Article if delegating design responsibility for architectural precast concrete units to Contractor. AIA Document A201 requires Owner or Architect to specify performance and design criteria.

A. Structural Performance: Provide architectural precast concrete units and connections capable of withstanding the following design loads within limits and under conditions indicated:
1. Loads: As indicated.

Retain paragraph above if design loads are shown on Drawings; delete subparagraph above and retain paragraph and applicable subparagraphs below if including design loads here. Revise requirements below to suit Project, and add other performance and design criteria if applicable.

B. Structural Performance: Provide architectural precast concrete units and connections capable of withstanding the following design loads within limits and under conditions indicated:

As a minimum dead loads include panel weight and the weight(s) of the materials that bear on them.

1. Dead Loads: <**Insert applicable dead loads.**>
2. Live Loads: <**Insert applicable live loads.**>
3. Wind Loads: <**Insert applicable wind loads or wind-loading criteria, positive and negative for various parts of the building as required by applicable building code or ASCE 7, including basic wind speed, importance factor, exposure category, and pressure coefficient.**>
4. Seismic Loads: <**Insert applicable seismic design data including seismic performance category, importance factor, use group, seismic design category, seismic zone, site classification, site coefficient, and drift criteria.**>

Precast specific loads may include blast loads.

5. Project Specific Loads: <**Insert applicable loads.**>
6. Design precast concrete units and connections to maintain clearances at openings, to allow for fabrication and construction tolerances, to accommodate live-load deflection, shrinkage and creep of primary building structure, and other building movements as follows:

Indicate locations here or on Drawings if different element structural, shrinkage, creep or thermal movements are anticipated for different building elements. If preferred, change deflection limits in subparagraph below to ratios such as *L*/300 for floors and *L*/200 for roofs. Verify all building frame movements with the Engineer of Record.

a. Upward and downward movement of **($^1/_2$ in. [13 mm]) ($^3/_4$ in. [19 mm]) (1 in. [25 mm])**.
b. Overall building drift: <**Insert drift.**>
c. Interstory building drift: <**Insert drift.**>

Temperature value in first subparagraph below is suitable for most of the U.S. based on assumed design nominal temperature of 70 °F (21 °C). Revise subparagraph below to suit local conditions. Temperature data are available from National Oceanic and Atmospheric Administration at www.ncdc.noaa.gov.

7. Thermal Movements: Provide for in-plane thermal movements resulting from annual ambient temperature changes of **(80 °F [26 °C])** <**Insert temperature range**>.

Delete subparagraph below if fire resistance rating is not required. Fire ratings depend on occupancy and building construction type, and are generally a building code requirement. When required, fire-rated products should be clearly identified on the design drawings.

8. Fire Resistance Rating: Select material and minimum thicknesses to provide **(1)(2)** <**Insert number**> - hour fire rating.

Delete subparagraph below if window washing system is not required. Indicate design criteria here or on Drawings for window washing system, including material and equipment..

9. Window Washing System: Design precast concrete units supporting window washing system indicated to resist pull-out and horizontal shear forces transmitted from window washing equipment.

Retain subparagraph below if stone veneer–faced precast concrete units are used on project.

10. Stone to Precast Concrete Anchorages: Provide anchors, as determined through Owner's or stone supplier testing, in numbers, types, and locations required to satisfy specified performance criteria.

Delete subparagraph below if precast concrete units are not used in parking structure to resist impact load. Local codes may have requirements that vary from those listed.

11. Vehicular Impact Loads: Design spandrel beams acting as vehicular barriers for passenger cars to resist a single load of **(6,000 lb [26.7 kN])** <**Insert load**> service load and **(10,000 lb [44.5 kN])** <**Insert load**> ultimate load applied horizontally in any direction to the spandrel beam, with anchorages or attachments capable of transferring this load to the structure. Design spandrel beams, assuming the load to act at a height of 18 in. (457 mm) above the floor or ramp surface on an area not to exceed 1 ft^2 (0.09 m^2).

1.5 SUBMITTALS

A. Product Data: For each type of product indicated. Retain quality control records and certificates of compliance for 5 years after completion of structure.

B. LEED Submittals:

Retain subparagraph below if recycled content is required for LEED-NC or LEED-CI Credits MR 4.1 and MR 4.2. An alternative method of complying with Credit MR 4.1 and MR 4.2 requirements is to retain requirement in Division 01 SECTION "Sustainable Design Requirements" that gives Contractor the option and responsibility for determining how Credit MR 4.1 and MR 4.2 requirements will be met.

1. Product Data for Credit MR 4.1[**and Credit MR 4.2**]: For products having recycled content, documentation indicating percentages by weight of postconsumer and preconsumer (post-industrial) recycled content per unit of product.
   a. Indicate recycled content; indicate percentage of pre-consumer and post-consumer recycled content per unit of product.
   b. Indicate relative dollar value of recycled content product to total dollar value of product included in project.
   c. If recycled content product is part of an assembly, indicate the percentage of recycled content product in the assembly by weight.
   d. If recycled content product is part of an assembly, indicate relative dollar value of recycled content product to total dollar value of assembly.
2. Product Data for Credit MR 5.1 **[and Credit MR 5.2]**: For local and regional material extracted/harvested and manufactured within a 500 mile radius from the project site.
   a. Indicate location of extraction, harvesting, and recovery; indicate distance between extraction, harvesting, and recovery and the project site.
   b. Indicate location of manufacturing facility; indicate distance between manufacturing facility and the project site.
   c. Indicate dollar value of product containing local/regional materials; include materials cost only.
   d. Where product components are sourced or manufactured in separate locations, provide location information for each component. Indicate the percentage by weight of each component per unit of product.

Retain subparagraph below if environmental data is required in accordance with Table 1 of ASTM E 2129. Concrete is relatively inert once cured. Admixtures, form release agents, and sealers may emit VOCs, especially during the curing process; however, virtually all emissions are eliminated before enclosing the building.

3. Include MSDS product information showing that materials meet any environmental performance goals such as biobased content.

4. For projects using FSC certified formwork, include chain-of-custody documentation with certification numbers for all certified wood products.
5. For projects using reusable formwork, include data showing how formwork is reused.

C. Design Mixtures: For each precast concrete mixture. Include results of compressive strength and water-absorption tests.

D. Shop (Erection) Drawings: Detail fabrication and installation of architectural precast concrete units. Indicate locations, plans, elevations, dimensions, shapes, and cross-sections of each unit. Indicate aesthetic intent including joints, rustications or reveals, and extent and location of each surface finish. Indicate details at building corners.

Delete subparagraphs below not applicable to Project.

1. Indicate separate face and backup mixture locations and thicknesses.
2. Indicate welded connections by AWS standard symbols and show size, length, and type of each weld. Detail loose and cast-in hardware and connections.
3. Indicate locations, tolerances, and details of anchorage devices to be embedded in or attached to structure or other construction.
4. Indicate locations, extent, and treatment of dry joints if two-stage casting is proposed.
5. Indicate plans and/or elevations showing unit location and dimensions, erection sequences, and bracing plan for special conditions.
6. Indicate location of each architectural precast concrete unit by same identification mark placed on unit.
7. Indicate relationship of architectural precast concrete units to adjacent materials.
8. Indicate locations and details of clay product units, including corner units and special shapes with dimensions, and joint treatment.
9. Indicate locations and details of stone veneer-facings, stone anchors, and joint widths.
10. Coordinate and indicate openings and inserts required by other trades.
11. Design Modifications: If design modifications are proposed to meet performance requirements and field conditions, notify the Architect and submit design calculations and Shop Drawings. Do not adversely affect the appearance, durability, or strength of units when modifying details or materials and maintain the general design concept.

Retain subparagraph below if retaining "Performance Requirements" Article. Delete or modify if Architect assumes or is required by law to assume design responsibility.

12. Comprehensive engineering design **(signed and sealed) (certified)** by qualified professional engineer responsible for its preparation licensed in the jurisdiction in which the project is located. Show governing panel types, connections, and types of reinforcement, including special reinforcement such as epoxy coated carbon fiber grid. Indicate location, type, magnitude, and direction of all loads imposed on the building structural frame by the architectural precast concrete.

Retain paragraph and subparagraphs below if finishes, colors, and textures are preselected, specified, or scheduled. Coordinate with sample panels and range samples in "Quality Assurance" Article.

E. Samples: Design reference samples for initial verification of design intent, approximately 12 x 12 x 2 in. (300 x 300 x 50 mm), representative of finishes, color, and textures of exposed surfaces of architectural precast concrete units.
1. When back face of precast concrete unit is to be exposed, include Samples illustrating workmanship, color, and texture of the backup concrete as well as facing concrete.

Retain subparagraph below if Samples of thin brick facings are required.

2. Samples for each brick unit required, showing full range of color and texture expected. Include Sample showing color, geometry, and texture of joint treatment.

Retain paragraph below if procedures for welder certification are retained in "Quality Assurance" Article.

F. Welding Certificates: Copies of certificates for welding procedure specifications (WPS) and personnel certification.

Manufacturer should have a minimum of 2 years of production experience in architectural precast concrete work comparable to that shown and specified, in not less than three projects of similar scope with the Owner or Architect determining the suitability of the experience.

G. Qualification Data: For firms and persons specified in "Quality Assurance" Article to demonstrate their capabilities and experience. Include list of completed projects with project names and addresses, names and addresses of architects and owners, and other information specified.

Delete test reports paragraph below if not required.

H. Material Test Reports: From an accredited testing agency, indicating and interpreting test results of the following, for compliance with requirements indicated:

Retain paragraph above or below.

I. Material Certificates. For the following items signed by manufacturers:

Retain list below with either paragraph above. Edit to suit Project.

1. Cementitious materials.
2. Reinforcing materials including prestressing tendons.
3. Admixtures.
4. Bearing pads.
5. Structural-steel shapes and hollow structural steel sections.
6. Insulation
7. Clay product units and accessories.
8. Stone anchors.

Retain paragraph below if Contractor is responsible for field quality-control testing. Retain option if Contractor is responsible for special inspections.

J. Field quality-control test [**and special inspections**] reports.

1.6 QUALITY ASSURANCE

Erector should have a minimum of 2 years of experience in architectural precast concrete work comparable to that shown and specified in not less than three projects of similar scope with the Owner or Architect determining the suitability of the experience. The inclusion of erection in the precast concrete contract should be governed by local practices. Visit the PCI website at www.pci.org for current listing of PCI- Qualified and Certified Erectors. Retain first paragraph below if PCI-Certified Erector is not available in project location.

A. Erector Qualification: A precast concrete erector with all erecting crews Qualified and designated, prior to beginning work at project site, by PCI's Certificate of Compliance to erect **(Category A [Architectural Systems] for non-load-bearing members) (Category S2 [Complex Structural Systems] for load-bearing members)**.

B. Erector Certification: A precast concrete erector with erecting organization and all erecting crews Certified and designated, prior to beginning work at project site, by PCI's Certificate of Compliance to erect **(Category A [Architectural Systems] for non-load-bearing members) (Category S2 [Complex Structural Systems] for load-bearing members)**.

Retain first paragraph below if PCI-Qualified or Certified Erector is not available in Project location. Basis of audit is PCI MNL-127, *Erector's Manual – Standards and Guidelines for the Erection of Precast Concrete Products*.

C. Erector Qualifications: A precast concrete erector who has retained a "PCI-Certified Field Auditor", at erector's expense, to conduct a field audit of a project in the same category as this Project prior to start of erection and who can produce an Erector's Post Audit Declaration.

D. Fabricator Qualifications: A firm that complies with the following requirements and is experienced in producing architectural precast concrete units similar to those indicated for this Project and with a record of successful in-service performance.

1. Assumes responsibility for engineering architectural precast concrete units to comply with performance requirements. This responsibility includes preparation of Shop Drawings and comprehensive engineering analysis by a qualified professional engineer.

Delete subparagraph above and below if Precaster is not required to engage the services of a qualified professional engineer and if submission of a comprehensive engineering analysis is not retained in "Submittals" Article.

2. Professional Engineer Qualifications: A professional engineer who is legally qualified to practice in the jurisdiction where Project is located and who is experienced in providing engineering services of the kind indicated. Engineering services are defined as those performed for installations of architectural precast concrete that are similar to those indicated for this Project in material, design, and extent.
3. Participates in PCI's Plant Certification program (at the time of bidding) and is designated a PCI-Certified plant for Group A, Category A1- Architectural Cladding and Loadbearing Units.
4. Has sufficient production capacity to produce required units without delaying the Work.

Delete subparagraph below if fabricators are not required to be registered with and approved by authorities having jurisdiction. List approved fabricators in Part 2 if required.

5. Is registered with and approved by authorities having jurisdiction.

Retain first paragraph below if quality assurance testing in addition to that provided by the PCI Certification Program is required. Testing agency if required, is normally engaged by Owner.

E. Testing Agency Qualifications: An independent testing agency **(acceptable to authorities having jurisdiction)**, qualified according to ASTM C 1077 and ASTM E 329 to conduct the testing indicated.

F. Design Standards: Comply with ACI 318 (ACI 318M) and design recommendations of PCI MNL 120, *PCI Design Handbook – Precast and Prestressed Concrete*, applicable to types of architectural precast concrete units indicated.

G. Quality-Control Standard: For manufacturing procedures and testing requirements, quality-control recommendations, and dimensional tolerances for types of units required, comply with PCI MNL 117, *Manual for Quality Control for Plants and Production of Architectural Precast Concrete Products.*

Delete paragraph below if no welding is required. Retain "Welding Certificates" paragraph in "Submittals" Article if retaining below. AWS states that welding qualifications remain in effect indefinitely unless welding personnel have not welded for more than six months or there is a specific reason to question their ability.

H. Welding: Qualify procedures and personnel according to AWS D1.1/D1.1M, "Structural Welding Code – Steel"; and AWS D1.4, "Structural Welding Code – Reinforcing Steel."

Retain paragraph below if fire-rated units or assemblies are required. Select either PCI MNL 124 or ACI 216.1/TMS 0216.1 or retain both if acceptable to authorities having jurisdiction.

I. Fire Resistance: Where indicated, provide architectural precast concrete units whose fire resistance meets the prescriptive requirements of the governing code or has been calculated according to **(PCI MNL 124, *Design for Fire Resistance of Precast Prestressed Concrete) (ACI 216.1/TMS 0216.1, Standard Method for Determining Fire Resistance of Concrete and Masonry Construction Assemblies)*** and is acceptable to authorities having jurisdiction.

PCI recommends review of preproduction sample panels or first production unit. Revise size and number of sample panels in paragraph below to suit Project.

J. Sample Panels: After sample approval and before fabricating architectural precast concrete units, produce a minimum of **(two)** <**Insert number**> sample panels approximately **(16 ft² [1.5 m²])** <**Insert size**> in area for review by Architect. Incorporate full-scale details of architectural features, finishes, textures, and transitions in the sample panels.

1. Locate panels where indicated or, if not indicated, as directed by Architect.
2. Damage part of an exposed-face surface for each finish, color, and texture, and demonstrate adequacy of repair techniques proposed for repair of surface blemishes.
3. After acceptance of repair technique, maintain one sample panel at the manufacturer's plant and one at the Project site in an undisturbed condition as a standard for judging the completed Work.
4. Demolish and remove sample panels when directed.

PCI recommends production of finish and texture range samples when color and texture uniformity concerns could be an issue, Architect or precaster has not had previous experience with the specified mixture and finish, or a large project has multiple approving authorities.

K. Range Sample Panels: After sample panel approval and before fabricating architectural precast concrete units, produce a minimum of **(three)(five)** <**Insert number**>samples, approximately **(16 ft² [1.5 m²])** <**Insert number**> in area, representing anticipated range of color and texture on Project's units. Maintain samples at the manufacturer's plant as color and texture acceptability reference.

Delete paragraph and subparagraphs below if sample panels and range samples above will suffice and added expense of mockups is not required. If retaining, indicate location, size, and other details of mockups on Drawings or by inserts. Revise wording if only one mockup is required.

L. Mockups: After sample panel **(and range sample)** approval but before production of architectural precast concrete units, construct full-sized mockups to verify selections made under sample submittals and to demonstrate aesthetic effects and set quality standards for materials and execution. Mockups to be representative of the finished work in all respects including **(glass, aluminum framing, sealants)** <**Insert construction type**> and architectural precast concrete complete with anchors, connections, flashings, and joint fillers as accepted on the final Shop Drawings. Build mockups to comply with the following requirements, using materials indicated for the completed work:

Revise or delete subparagraphs below to suit Project.

1. Build mockups in the location and of the size indicated or, if not indicated, as directed by Architect.
2. Notify Architect in advance of dates and times when mockups will be constructed.
3. Obtain Architect's approval of mockups before starting production fabrication of precast concrete units.
4. Maintain mockups during construction in an undisturbed condition as a standard for judging the completed Work.
5. Demolish and remove mockups when directed.

Retain first subparagraph below if mockups are erected as part of building rather than separately and the intention is to make an exception to the default requirement in Division 01 Section "Quality Requirements" for demolishing and removing mockups when directed, unless otherwise indicated.

6. Approved mockups may become part of the completed Work if undamaged at the time of Substantial Completion.
7. Approval of mockups does not constitute approval of deviations from the Contact Documents unless such deviations are specifically approved by Architect in writing.

Delete paragraph below if mockup above is to be used for Testing Mockup or if testing is not required. If retaining paragraph and subparagraphs below, determine where preconstruction testing will be specified and include requirements in that Section. Requirements in paragraph below are limited to building a preconstruction testing mockup at a testing agency's facility.

M. Preconstruction Testing Mockup: Provide a full-size mockup of architectural precast concrete indicated on Drawings for preconstruction testing. Refer to Division [**01**][**08**] <**Insert Division number**> Section "<**Insert Section title**>" for preconstruction testing requirements.

Revise or delete subparagraphs below to suit Project. Coordinate with other Sections that include construction to be included in a preconstruction testing mockup to clearly indicate extent of work required in this Section

1. Build preconstruction testing mockup as indicated on Drawings including **[glass, aluminum framing, sealants,]** <**Insert construction**> and architectural precast concrete complete with anchors, connections, flashings, and joint fillers.
2. Build preconstruction testing mockup at testing agency facility.

Delete paragraph below if Work of this Section is not extensive or complex enough to justify a preinstallation conference. If retaining, coordinate with Division 01.

N. Preinstallation Conference: Conduct conference at Project site to comply with requirements in Division 01 Section "Project Management and Coordination."

1.7 PRODUCT DELIVERY, STORAGE, AND HANDLING

A. Store units with adequate dunnage and bracing, and protect units to prevent contact with soil, to prevent staining, and to prevent cracking, distortion, warping, or other physical damage.

B. Place stored units so identification marks are clearly visible, and units can be inspected.

C. Deliver architectural precast concrete units in such quantities and at such times to ensure compliance with the agreed project schedule and proper setting sequence and also to limit unloading units temporarily on the ground or other rehandling.

D. Support units during shipment on non-staining shock-absorbing material.

E. Handle and transport units in a position consistent with their shape and design in order to avoid excessive stresses that could cause cracking or damage.

F. Lift and support units only at designated points indicated on Shop Drawings.

1.8 SEQUENCING

Coordination and responsibility for supply of items to be placed on or in the structure to allow placement of precast concrete units depends on type of structure and varies with local practice. Clearly specify responsibility for supply and installation of hardware. If not supplied by precaster, supplier should be listed and requirements included in related trade sections. Ensure that type and quantity of hardware items to be cast into precast concrete units for use by other trades are specified or detailed in Contract Drawings and furnished to precaster, with instructions, in a timely manner in order not to delay the Work.

A. Furnish loose connection hardware and anchorage items to be embedded in or attached to other construction without delaying the Work. Provide locations, setting diagrams, templates, instructions, and directions, as required, for installation.

PART 2 – PRODUCTS

2.1 FABRICATORS

Delete this Article unless naming fabricators. See PCI's magazine *ASCENT* or visit PCI's website at www.pci.org for current PCI-Certified plant listings.

A. Available Fabricators: Subject to compliance with requirements, fabricators offering products that may be incorporated into the Work include, but are not limited to, the following:

Retain above for nonproprietary or below for semiproprietary specification. If above is retained, include procedure for approval of other fabricators in Instructions to Bidders. See Division 01 Section "Product Requirements."

B. Fabricators: Subject to compliance with requirements, provide products by one of the following:

1. <**Insert in separate subparagraphs, fabricators' names and product designations for acceptable manufacturers.**>

2.2 MOLD MATERIALS

A. Molds: Rigid, dimensionally stable, non-absorptive material, warp and buckle free, that will provide continuous and true precast concrete surfaces within fabrication tolerances indicated; nonreactive with concrete and suitable for producing required finishes.

1. Form-Release Agent: Commercially produced form-release agent that will not bond with, stain, or adversely affect precast concrete surfaces and will not impair subsequent surface or joint treatments of precast concrete.

Delete paragraph below if not using form liners. Form liners may be used to achieve a special off-the-form finish or to act as a template for thin or half-brick facings. Revise to add description of selected form liner, if required.

B. Form Liners: Units of face design, texture, arrangement, and configuration **(indicated) (to match those used for precast concrete design reference sample)**. Provide solid backing and form supports to ensure that form liners remain in place during concrete placement. Use manufacturer's recommended form-release agent that will not bond with, stain, or adversely affect precast concrete surfaces and will not impair subsequent surface or joint treatments of precast concrete.

Retain paragraph below if surface retarder is applied to molds to help obtain exposed aggregate finish.

C. Surface Retarder: Chemical set retarder, capable of temporarily delaying setting of newly placed concrete to depth of reveal specified.

2.3 REINFORCING MATERIALS

Retain first paragraph below if recycled content is required for LEED-NC or LEED-CI Credits MR 4.1 and MR 4.2. USGBC allows a default value of 25 percent to be used for steel, without documentation; higher percentages can be claimed if they are supported by appropriate documentation. The Steel Recycling Institute indicates that reinforcing bars are made by the electric arc furnace method, which typically has 67 percent post-consumer recycled content and 6.5 percent pre-consumer recycled content.

A. Recycled Content of Steel Products: Provide products with an average recycled content of steel products so postconsumer recycled content plus one-half of preconsumer recycled content is not less than [**25**][**60**] <**Insert number**> percent.

Select one or more of the paragraphs in this Article to suit steel reinforcement requirements. If retaining Part 1 "Performance Requirements" Article, consider reviewing selections with fabricators.

B. Reinforcing Bars: ASTM A 615/A 615M, Grade 60 (Grade 420), deformed.

Retain paragraph below for reinforcement that is welded or if added ductility is sought.

C. Low-Alloy-Steel Reinforcing Bars: ASTM A 706/A 706M, deformed.

Retain galvanized reinforcement in paragraph below where corrosive environment or severe exposure conditions justify extra cost. The presence of chromate film on the surface of the galvanized coating is usually visible as a light yellow tint on the surface. ASTM B 201 describes a test method for determining the presence of chromate coatings.

D. Galvanized Reinforcing Bars: **(ASTM A 615/A 615M, Grade 60 [Grade 420]) (ASTM A 706/A 706M)**, deformed bars, ASTM A 767/A 767M Class II zinc-coated, hot-dip galvanized and chromate wash treated after fabrication and bending.

Consider using epoxy-coated reinforcement where corrosive environment or severe exposure conditions justify extra cost. In first paragraph below, retain ASTM A 775/A 775M for a bendable epoxy coating; retain ASTM A 934/A 934M for a nonbendable epoxy coating.

E. Epoxy-Coated Reinforcing Bars: **(ASTM A 615/A 615M, Grade 60 [Grade 420]) (ASTM A 706/A 706M)**, deformed bars, **(ASTM A 775/A 775M)** or **(ASTM A 934/A 934M)** epoxy coated.

F. Steel Bar Mats: ASTM A 184/A 184M, fabricated from **(ASTM A 615/A 615M, Grade 60 [Grade 420]) (ASTM A 706/A 706M)** deformed bars, assembled with clips.

Select one or more of the paragraphs below to suit steel reinforcement requirements. If retaining Part 1 "Performance Requirements" Article, consider reviewing selections with fabricators.

G. Plain-Steel Welded Wire Reinforcement: ASTM A 185, fabricated from **(as-drawn) (galvanized and chromate wash treated)** steel wire into flat sheets.

H. Deformed Steel Welded Wire Reinforcement: ASTM A 497/A 497M, flat sheet.

I. Epoxy Coated-Steel Welded Wire Reinforcement: ASTM A 884/A 884M Class A coated, **(plain) (deformed)**, flat sheet, Type **(1 bendable) (2 non-bendable)** coating.

J. Supports: Suspend reinforcement from back of mold or use bolsters, chairs, spacers, and other devices for spacing, supporting, and fastening reinforcing bars and welded wire reinforcement in place according to PCI MNL 117.

2.4 PRESTRESSING TENDONS

Retain this Article if precast concrete units will be prestressed, either pretensioned or post-tensioned. ASTM A 416/A 416M establishes low-relaxation strand as the standard.

A. Prestressing Strand: ASTM A 416/A 416M, Grade 270 (Grade 1860), uncoated, 7-wire, low-relaxation strand.

B. Unbonded Post-Tensioning Strand: ASTM A 416/A 416M with corrosion inhibitor coating conforming to ASTM D1743, Grade 270 (Grade 1860), 7-wire, low-relaxation strand with polypropylene tendon sheathing. Include anchorage devices.

C. Post-Tensioning Bars: ASTM A 722, uncoated high strength steel bar.

2.5 CONCRETE MATERIALS

Delete materials in this Arcticle that are not required; revise to suit Project.

A. Portland Cement: ASTM C150, Type I or III.

Select portland cement color from options in subparagraph below. Mixing with white cement will improve color uniformity of gray cement. White cement has greater color consistency than gray cement and should be used for pastel colors. For darker colors, the variations of gray cement have less effect on the final color hue.

1. For surfaces exposed to view in finished structure, use **(gray) (or) (white)**, of same type, brand, and mill source throughout the precast concrete production.

Delete subparagraphs below if only gray cement is selected in paragraph above. Retain below if face mixture uses white cement but gray cement will be permitted in backup mixture.

2. Standard gray portland cement may be used for non-exposed backup concrete.

B. Supplementary Cementitious Materials.

Prior to selecting mineral or cementitious materials from four subparagraphs below consult local precasters. These materials may affect concrete appearance, set times and cost. Where appearance is an important factor, it is recommended that fly ash and gray silica fume not be permitted for exposed exterior surfaces. White silica fume is available.

1. Fly Ash: ASTM C 618, Class C or F with maximum loss on ignition of 3%.
2. Metakaolin: ASTM C 618, Class N.
3. Silica Fume: ASTM C 1240 with optional chemical and physical requirements.
4. Ground Granulated Blast-Furnace Slag: ASTM C 989, Grade 100 or 120.

ASTM C 33 limits deleterious substances in coarse aggregate depending on climate severity and in-service location of concrete. Class 5S is the most restrictive designation for architectural concrete exposed to severe weathering. PCI MNL 117 establishes stricter limits on deleterious substances for fine and coarse aggregates.

C. Normalweight Aggregates: Except as modified by PCI MNL 117, ASTM C 33, with coarse aggregates complying with Class 5S. Provide and stockpile fine and coarse aggregates for each type of exposed finish from a single source (pit or quarry) for Project.

Revise subparagraph below and add descriptions of selected coarse- and fine-face aggregate colors, sizes, and sources if required.

1. Face-Mixture Coarse Aggregates: Selected, hard, and durable; free of material that reacts with cement or causes staining; to match selected finish sample.

Retain one option from first subparagraph below or insert gradation and maximum aggregate size if known. Fine and coarse aggregates are not always from same source.

a. Gradation: **(Uniformly graded) (Gap graded) (To match design reference sample)**.

2. Face-Mixture Fine Aggregates: Selected, natural, or manufactured sand of a material compatible with coarse aggregate to match selected Sample finish.

Delete subparagraph below when architectural requirements dictate that face-mixture be used throughout.

3. Backup Concrete Aggregates: ASTM C 33 or C 330.

Lightweight aggregates in a face-mixture are not recommended in cold or humid climates (if exposed to the weather) unless their performance has been verified by tests or records of previous satisfactory usage in similar environments. If normalweight aggregates are used in face-mixture, lightweight aggregates in the backup mixture are not recommended due to panel bowing potential.

D. Lightweight Aggregates: Except as modified by PCI MNL 117, ASTM C 330 with absorption less than 11%.

Delete first paragraph below if coloring admixture is not required. Add color selection if known.

E. Coloring Admixture: ASTM C 979, synthetic or natural mineral–oxide pigments or colored water-reducing admixtures, temperature stable, and non-fading.

F. Water: Potable; free from deleterious material that may affect color stability, setting, or strength of concrete and complying with ASTM C 1602/C 1602M and chemical limits of PCI MNL 117.

Delete paragraph below if air entrainment is not required. Air entrainment should be required to increase resistance to freezing and thawing where environmental conditions dictate.

G. Air-Entraining Admixture: ASTM C 260, certified by manufacturer to be compatible with other required admixtures.

H. Chemical Admixtures: Certified by manufacturer to be compatible with other admixtures and to not contain calcium chloride, or more than 0.15% chloride ions or other salts by weight of admixture.

Limit chemical admixture types if required.

1. Water-Reducing Admixture: ASTM C 494/C 494M, Type A.
2. Retarding Admixture: ASTM C 494/C 494M, Type B.
3. Water-Reducing and Retarding Admixture: ASTM C 494/C 494M, Type D.
4. Water-Reducing and Accelerating Admixture: ASTM C 494/C 494M, Type E.
5. High-Range, Water-Reducing Admixture: ASTM C 494/C 494M, Type F.
6. High-Range, Water-Reducing and Retarding Admixture: ASTM C 494/C 494M, Type G.
7. Plasticizing Admixture for Flowable Concrete: ASTM C 1017/C 1017M.

2.6 STEEL CONNECTION MATERIALS

Edit this Article to suit Project. Add other materials as required.

A. Carbon-Steel Shapes and Plates: ASTM A 36/A 36M.

B. Carbon-Steel Headed Studs: ASTM A 108, Grades 1010 through 1020, cold finished, AWS D1.1/ D1.1 M, Type A or B, with arc shields and with minimum mechanical properties of PCI MNL 117, Table 3.2.3.

C. Carbon-Steel Plate: ASTM A 283/A 283M.

D. Malleable Iron Castings: ASTM A 47/A 47M, Grade 32510 or 35028.

E. Carbon-Steel Castings: ASTM A 27/A 27M, Grade 60-30 (Grade 415-205).

F. High-Strength, Low-Alloy Structural Steel: ASTM A 572/A 572M.

G. Carbon-Steel Structural Tubing: ASTM A 500, Grade B or C.

H. Wrought Carbon-Steel Bars: ASTM A 675/A 675M, Grade 65 (Grade 450).

I. Deformed-Steel Wire or Bar Anchors: ASTM A 496 or ASTM A 706/A 706M.

ASTM A 307 defines the term "studs" to include stud stock and threaded rods.

J. Carbon-Steel Bolts and Studs: ASTM A 307, Grade A or C (ASTM F 568M, Property Class 4.6) carbon-steel, hex-head bolts and studs; carbon-steel nuts (ASTM A 563/A 563M, Grade A); and flat, unhardened steel washers (ASTM F 844).

High-strength bolts are used for friction-type connections between steel members and are not recommended between steel and concrete because concrete creep and crushing of concrete during bolt tightening reduce effectiveness. ASTM A 490/A 490M bolts should not be galvanized.

K. High-Strength Bolts and Nuts: ASTM A 325/A 325M or ASTM A 490/A 490M, Type 1, heavy hex steel structural bolts, heavy hex carbon-steel nuts, (ASTM A 563/A 563M) and hardened carbon-steel washers (ASTM F 436/F 436M).

Structural plate and shape steel connection hardware enclosed in wall cavities is provided uncoated in non corrosive environments. Protection is required by painting or galvanizing on steel connection hardware when the corrosive environment is high or when connections are exposed to exterior weather conditions. Retain paragraph below if shop-primed finish is required. Indicate locations of priming, if required. MPI 79 in first option below provides some corrosion protection while SSPC-Paint 25, without top-coating, provides minimal corrosion protection. The need for protection from corrosion will depend on the actual conditions to which the connections will be exposed to in service.

L. Shop-Primed Finish: Prepare surfaces of nongalvanized steel items, except those surfaces to be embedded in concrete, according to requirements in SSPC-SP 3 and shop-apply **(lead- and chromate-free, rust–inhibitive primer, complying with performance requirements in MPI 79) (SSPC-Paint 25)** according to SSPC-PA 1.

Retain paragraph and subparagraph below if galvanized finish is required. Indicate locations of galvanized items if required. Field welding should generally not be permitted on galvanized elements, unless the galvanizing is removed or acceptable welding procedures are submitted. Hot-dip galvanized finish provides greater corrosion resistance than electrodeposited zinc coating. Electrodeposition is usually limited to threaded fasteners.

M. Zinc-Coated Finish: For steel items in exterior walls and items indicated for galvanizing, apply zinc coating by **(hot-dip process according to ASTM A 123/A 123M, after fabrication, ASTM A 153/A 153M, or ASTM F 2329 as applicable) (electrodeposition according to ASTM B 633, SC 3, Type 1and 2 and F 1941 and F 1941M)**.

1. For steel shapes, plates, and tubing to be galvanized, limit silicon content of steel to less than 0.03% or to between 0.15 and 0.25% or limit sum of silicon content and 2.5 times phosphorous content to 0.09%.
2. Galvanizing Repair Paint: High zinc-dust-content paint with dry film containing not less than 94% zinc dust by weight, and complying with DOD-P-21035A or SSPC-Paint 20. Comply with manufacturer's requirements for surface preparation.

2.7 STAINLESS-STEEL CONNECTION MATERIALS

Delete this Article if not required. Retain when resistance to staining and corrosion merits extra cost in high moisture or corrosive areas.

A. Stainless-Steel Plate: ASTM A 666, Type 304, of grade suitable for application.

B. Stainless-Steel Bolts and Studs: ASTM F 593, alloy 304 or 316, hex-head bolts and studs; stainless-steel nuts; and flat, stainless-steel washers.
1. Lubricate threaded parts of stainless-steel bolts with an anti-seize thread lubricant during assembly.

C. Stainless-Steel Headed Studs: ASTM A 276 with the minimum mechanical properties for studs of PCI MNL 117, Table 3.2.3.

2.8 BEARING PADS AND OTHER ACCESSORIES

Delete this Article if not applicable. Choice of bearing pad can usually be left to fabricator; coordinate selection with structural engineer if required.

A. Provide one of the following bearing pads for architectural precast concrete units **(as recommended by precast concrete fabricator for application)**:
1. Elastomeric Pads: AASHTO M 251, plain, vulcanized, 100% polychloroprene (neoprene) elastomer, molded to size or cut from a molded sheet, 50 to 70 Shore A durometer according to ASTM D 2240, minimum tensile strength 2250 psi (15.5 MPa) per ASTM D 412.
2. Random-Oriented, Fiber-Reinforced Elastomeric Pads: Preformed, randomly oriented synthetic fibers set in elastomer. Surface hardness of 70 to 90 Shore A durometer according to ASTM D 2240. Capable of supporting a compressive stress of 3000 psi (20.7 MPa) with no cracking, splitting, or delaminating in the internal portions of the pad. Test one specimen for each 200 pads used in the Project.
3. Cotton-Duck-Fabric–Reinforced Elastomeric Pads: Preformed, horizontally layered cotton-duck fabric bonded to an elastomer. Surface hardness of 80 to 100 Shore A durometer according to ASTM D 2240. Conforming to Division II, Section 18.10.2 of AASHTO LRFD Bridge Design Specifications, or Military Specification, MIL-C-882E.
4. Frictionless Pads: Tetrafluoroethylene (Teflon), glass-fiber reinforced, bonded to stainless or mild-steel plates, or random-oriented, fiber-reinforced elastomeric pads, of type required for in-service stress.
5. High-Density Plastic: Multimonomer, nonleaching, plastic strip capable of supporting loads with no visible overall expansion.

Select material from options in paragraph below or add another material to suit Project. Coordinate with counterflashing materials and details. It is preferable to use surface mounted reglets to avoid misalignment of reglets from panel to panel.

B. Reglets: **(PVC extrusions) (Stainless steel, Type 304) (Copper) (Reglets and flashing are specified in Division 07 Section "Sheet Metal Flashing and Trim")** felt- or fiber-filled or face opening of slots covered.

C. Precast Concrete Accessories: Provide clips, hangers, high-density plastic or steel shims, and other accessories required to install architectural precast concrete units.

D. Welding Electrodes: Comply with AWS standards.

2.9 GROUT MATERIALS

Add other proprietary grout systems to suit Project. Describe locations of each grout here or on Drawings if retaining more than one type. Indicate required strengths on Contract Drawings.

A. Sand-Cement Grout: Portland cement, ASTM C 150, Type I, and clean, natural sand, ASTM C 144 or ASTM C 404. Mix at ratio of 1 part cement to $2^1/_2$ to 3 parts sand, by volume, with minimum water required for placement.

Retain first paragraph below if nonshrink grout is required or if cement-grout shrinkage could cause structural deficiency. For critical installations, require manufacturer to provide field supervision.

B. Nonmetallic, Nonshrink Grout: Premixed, packaged non-ferrous aggregate, noncorrosive, nonstaining grout containing selected silica sands, portland cement, shrinkage-compensating agents, plasticizing and water-reducing admixtures, complying with ASTM C 1107, Grade A for drypack and Grades B and C for flowable grout and of a consistency suitable for application within a 30-minute working time.

C. Epoxy-Resin Grout: Two-component, mineral-filled epoxy-resin: ASTM C 881/C 881M of type, grade, and class to suit requirements.

2.10 CLAY PRODUCT UNITS AND ACCESSORIES

Retain this Article if specifying thin veneer brick–faced precast concrete panels. PCI Standard for brick units features tighter dimensional tolerances than ASTM C 1088 or ASTM C 216, Type FBX. TBX or FBX brick units may be too dimensionally variable to fit securely within form liner templates. For economy, brick patterns should minimize cutting of brick. Select thin brick manufacturer and product prior to bid or establish cost allowance. If full-size brick units are required, delete this article and refer to Division 04 Section "Unit Masonry Assemblies." The listed characteristics for thin brick units are included in PCI "Standard for Thin Brick".

A. Thin Brick Units: PCI Standard, not less than $^1/_2$ in. (13 mm), nor more than 1 in. (25 mm) thick, with an overall tolerance of plus 0 in., minus $^1/_{16}$ in. (+0 mm, -1.6 mm) for any unit dimension 8 in. (200 mm) or less and an overall tolerance of plus 0 in., minus $^3/_{32}$ in. (+0 mm, -2.4 mm) for any unit dimension greater than 8 in. (200 mm) measured according to ASTM C 67.

1. Face Size: Modular, $2^1/_4$ in. (57 mm) high by $7\ ^5/_8$ in. (190 mm) long.
2. Face Size: Norman, $2^1/_4$ in. (57 mm) high by $11^5/_8$ in. (290 mm) long.
3. Face Size: Closure Modular, $3\ ^5/_8$ in. (90 mm) high by $7\ ^5/_8$ in. (190 mm) long.
4. Face Size: Utility, $3\ ^5/_8$ in. (90 mm) high by $11^5/_8$ in. (290 mm) long.

If approving a color range for brick, view 100 square feet (9.3 m^2) of loose bricks or a completed building. Edit to suit Project or delete if brick is specified by product name.

5. Face Size, Color, and Texture: **(Match Architect's samples) (Match existing color, texture, and face size of adjacent brickwork)**.
   a. <**Insert information on existing brick if known**>.

Show details on Drawings of special conditions and shapes if required.

6. Special Shapes: Include corners, edge corners, and end edge corners.
7. Cold Water Absorption at 24 Hours: Maximum 6% when tested per ASTM C 67.
8. Efflorescence: Tested according to ASTM C 67 and rated "not effloresced."
9. Out of Square: Plus or minus $^1/_{16}$ in. (± 1.6 mm) measured according to ASTM C 67.
10. Warpage: Consistent plane of plus 0 in., minus $^1/_{16}$ in. (+0 mm, -1.6 mm).
11. Variation of Shape from Specified Angle: Plus or minus 1 degree.
12. Tensile Bond Strength: Not less than 150 psi (1.0MPa) when tested per modified ASTM E 488. Epoxy steel plate with welded rod on a single brick face for each test.
13. Freezing and Thawing Resistance: No detectable deterioration (spalling, cracking, or chafing) when tested in accordance with ASTM C 666 Method B.
14. Modulus of Rupture: Not less than 250 psi (1.7MPa) when tested in accordance with ASTM C 67.
15. Chemical Resistance: Provide brick that has been tested according to ASTM C 650 and rated "not affected."

Delete subparagraph below if surface-colored brick is not used.

16. Surface Coloring: Brick with surface coloring shall withstand 50 cycles of freezing and thawing per ASTM C 67 with no observable difference in applied finish when viewed from 20 ft (6 m).

Retain first subparagraph below, deleting inapplicable descriptions if required.

17. Back Surface Texture: scored, combed, wire roughened, ribbed, keybacked, or dovetailed.
18. Available Products: Subject to compliance with requirements, products that may be incorporated into the Work include, but are not limited to, the following:

Retain subparagraph above for nonproprietary or subparagraph below for semiproprietary Specification. Refer to Division 01 Section "Materials and Equipment."

19. Products: Subject to compliance with requirements, products that may be incorporated into the work include the following:
    a. <**Insert in separate subparagraphs, manufacturers' name and product name or designation.**>

Refer to American National Standards Institute (ANSI) A 137.1 for the commonly available sizes and shapes, physical properties, the basis for acceptance, and methods of testing.

B. Glazed and Unglazed Ceramic Tile Units: ANSI A 137.1 **(not less than $^3/_8$ in. [10 mm]).**
1. Body of glazed tile shall have a water absorption of less than 3% using ASTM C 373.
2. Manufacturer shall warrant materials as frost-resistant.
3. Glazed units shall conform to ASTM C 126.

C. Architectural Terra Cotta Units: Comply with requirements of the manufacturer of the selected Architectural Terra Cotta for the application indicated.

Retain paragraph below if mortar setting clay product unit joints before placing precast concrete mixture.

D. Sand-Cement Mortar: Portland cement, ASTM C 150, Type I, and clean, natural sand, ASTM C 144. Mix at ratio of 1 part cement to 4 parts sand, by volume, with minimum water required for placement.

Delete paragraph and subparagraphs below if not filling thin brick unit joints with pointing grout after precast concrete panel production.

E. Latex-Portland Cement Pointing Grout: ANSI A118.6 (included in ANSI A108.1) and as follows:

Select one or both types of grout from first two subparagraphs below.

1. Dry-grout mixture, factory prepared, of portland cement, graded aggregate, and dry, redispersible, ethylene-vinyl-acetate additive for mixing with water; uniformly colored.
2. Commercial portland cement grout, factory prepared, with liquid styrene-butadiene rubber or acrylic-resin latex additive; uniformly colored.
3. Colors: **(As indicated by manufacturer's designations) (Match Architect's samples) (As selected by Architect from manufacturer's full range)**.

F. Setting Systems

Retain subparagraphs below if thin brick, ceramic tile, or full brick will be laid after casting of panel.

1. Thin brick and Ceramic Tile Units: **(Dry-Set Mortar: ANSI A118.1 [included in ANSI A108.1]) (Latex-Portland Cement Mortar: ANSI A 118.4 [included in ANSI A108.1])**
2. Full Brick Units: Install **(Galvanized)(Type 304 stainless steel**) dovetail slots in precast concrete: not less than $^{3}/_{16}$ in. (0.5 mm thick), felt- or fiber-filled or cover face opening of slots covered. Attach brick units with wire anchors, ASTM A 82 or B 227, Grade 30HS not less than $^{3}/_{16}$ in. (W2.8) in diameter and hooked on one end and looped through a $^{7}/_{8}$ in. (22 mm) wide, 12-gage (2.68 mm) steel sheet bent over the wire with dovetail on opposite end.

2.11 STONE MATERIALS AND ACCESSORIES

Retain this Article if stone facing is required. Performance criteria, preconstruction material testing, material quality, fabrication, and finish requirements are usually specified in Division 04 Section "Exterior Stone Cladding." Replace first paragraph below with stone requirements, if preferred.

A. Stone facing for architectural precast concrete is specified in Division 04 Section "Exterior Stone Cladding."
1. Tolerance of length and width of +0, -$^{1}/_{8}$ in. (+0, -3 mm).

Anchors are generally supplied by stone fabricator or, in some cases, by precaster. Specify supplier. Anchors may be toe-in, toe-out, or dowels.

B. Anchors: Stainless steel, ASTM A 666, Type 304, of temper and diameter required to support loads without exceeding allowable design stresses.

Grommets will usually be required if filling dowel holes with rigid epoxy.

1. Fit each anchor leg with 60 durometer neoprene grommet collar with a width at least twice the diameter of the anchor and a length at least five times the diameter of the anchor.

C. Sealant Filler: ASTM C 920, low-modulus, multicomponent, nonsag polyurethane or silicone sealant complying with requirements in Division 07 Section "Joint Sealants" and that is nonstaining to stone substrate.

Dowel hole filling is used to prevent water intrusion into stone and future discoloration at anchor locations. Retain paragraph above for a flexible filler or paragraph below for a rigid filler.

D. Epoxy Filler: ASTM C 881/C 881M, 100% solids, sand-filled non-shrinking, non-staining of type, class, and grade to suit application.

E. Bond Breaker: **(Preformed, compressible, resilient, non-staining, non-waxing, closed-cell polyethylene foam pad, nonabsorbent to liquid and gas, $^1/_8$ in. [3 mm] thick) (Polyethylene sheet, ASTM D 4397, 6 to 10 mil [0.15 to 0.25 mm] thick)**.

2.12 INSULATED PANEL ACCESSORIES

Retain this Article if insulated, architectural precast concrete panels are required. Specify the required thickness for each insulation type allowed to achieve the desired aged R-value. Select insulation material from one of three paragraphs below; if using more then one type, identify location of each on Drawings.

A. Expanded-Polystyrene Board Insulation: ASTM C 578, Type **(XI, 0.70 lb/ft^3[12kg/m^3]), (I, 0.90 lb/ft^3 [15kg/m^3])(VIII, 1.15 lb/ft^3[18kg/m^3])(II, 1.35 lb/ft^3[22kg/m^3])(IX, 1.80 lb/ft^3[29 kg/m^3])**; **(square)(ship-lap)** edges; with thickness of <**Insert dimension**>.

B. Extruded-Polystyrene Board Insulation: ASTM C 578, Type **(X, 1.30 lb/ft^3[21kg/m^3])(IV, 1.55 lb/ft^3[25 kg/m^3])(VI, 1.80 lb/ft^3[29 kg/m^3]) (VII, 2.20 lb/ft^3[35 kg/m^3])(V, 3.00 lb/ft^3[48 kg/m^3])**; **(square)(ship-lap)** edges; with thickness of <**Insert dimension**>.

C. Polyisocyanurate Board Insulation: Rigid, cellular polyisocyanurate thermal insulation complying with ASTM C 591; Grade 1, Type **(I, 1.8 lb/ft^3[29kg/m^3])(II, 2.5 lb/ft^3[40kg/m^3])(III, 3.0 lb/ft^3[48kg/m^3])**; square edged; unfaced; with thickness of <**Insert dimension**>.

Select wythe connectors from paragraph below.

D. Wythe Connectors: **(Glass-fiber and vinyl-ester polymer connectors), (Polypropylene pin connectors), (Stainless-steel pin connectors), (Bent galvanized reinforcing bars) (Galvanized welded wire trusses), (Galvanized bent wire connectors) (Epoxy coated carbon fiber grid)**, manufactured to connect wythes of precast concrete panels.

2.13 CONCRETE MIXTURES

A. Prepare design mixtures to match Architect's sample or for each type of precast concrete required.

Revise subparagraph below if fly ash or gray silica fume are not permitted. Revise percentages to suit Project. White silica fume is available.

1. Limit use of fly ash to 20 to 40% replacement of portland cement by weight; ground granulated blast-furnace slag to 15 to 25% of portland cement by weight; and metakaolin and silica fume to 10% of portland cement by weight.

B. Design mixtures may be prepared by a qualified independent testing agency or by qualified precast concrete plant personnel at architectural precast concrete fabricator's option.

C. Limit water-soluble chloride ions to the maximum percentage by weight of cement permitted by ACI 318 (ACI 318M) or PCI MNL 117 when tested in accordance with ASTM C 1218/C 1218M.

Architectural precast concrete units may be manufactured with a separate "architectural" face mixture and a "structural" backup mixture. Face and backup mixtures should have similar shrinkage and thermal coefficients of expansion. Similar water-cementitious materials ratios and cement-aggregate ratios are recommended to limit bowing or warping.

D. Normalweight Concrete Face and Backup Mixtures: Proportion mixtures by either laboratory trial batch or field test data methods according to ACI 211.1, with materials to be used on Project, to provide normalweight concrete with the following properties:

Retain subparagraph below or revise to suit Project. Higher-strength mixtures may be available; verify availability with fabricators.

1. Compressive Strength (28 Days): 5000 psi (34.5 MPa) minimum.
2. Release Strength: As required by design.

A maximum water-cementitious materials ratio of 0.40 to 0.45 is usual for architectural precast concrete. Lower ratios may be possible with use of high-range water reducing admixtures. Revise ratio as required to suit Project.

3. Maximum Water-Cementitious Materials Ratio: 0.45.

Water absorption indicates susceptibility to weather staining. The limit in paragraph below, corresponding to 6% by weight, is suitable for average exposures. Different parts of a single panel cannot be produced with different absorptions. Verify that fabricator can produce units with lower water absorption because special consolidation techniques to increase concrete density are required.

E. Water Absorption: 6% by weight or 14% by volume, tested according to PCI MNL 117.

Lightweight backup mixtures must be compatible with normalweight face mixtures to minimize bowing or warping. Retain paragraph below if required or as an option, if satisfactory durability and in-service performance are verified by fabricator. Coordinate with selection of normalweight face mixture option above.

F. Lightweight Concrete Backup Mixtures: Proportion mixtures by either laboratory trial batch or field test data methods according to ACI 211.2, with materials to be used on Project, to provide lightweight concrete with the following properties:

Retain subparagraph below or revise to suit Project. Higher-strength mixtures may be available; verify with fabricators.

1. Compressive Strength (28 Days): 5000 psi (34.5 MPa) minimum.
2. Release Strength: As required by design.

Increase or decrease unit weight in subparagraph below to suit Project. Coordinate with lightweight aggregate supplier and architectural precast concrete fabricator. Lightweight concretes with combinations of lightweight and normalweight aggregate in mixture will usually be heavier than unit weight below.

3. Unit Weight: Calculated equilibrium unit weight of 115 lb/ft^3 (1842 kg/m^3), where variations exceed plus or minus 5 lb/ft^3 (80 kg/m^3) adjust to plus or minus 3 lb/ft^3 (48 kg/m^3), according to ASTM C 567.

G. Add air-entraining admixture at manufacturer's prescribed rate to result in concrete at point of placement having an air content complying with PCI MNL 117.

H. When included in design mixtures, add other admixtures to concrete according to manufacturer's written instructions.

2.14 MOLD FABRICATION

A. Molds: Accurately construct molds, mortar tight, of sufficient strength to withstand pressures due to concrete placement and vibration operations and temperature changes, and for prestressing and detensioning operations. Coat contact surfaces of molds with release agent before reinforcement is placed. Avoid contamination of reinforcement and prestressing tendons by release agent.

Delete form liners in subparagraph below unless needed to produce exposed surface finish.

1. Place form liners accurately to provide finished surface texture indicated. Provide solid backing and supports to maintain stability of liners during concrete placement. Coat form liner with form-release agent.

B. Maintain molds to provide completed architectural precast concrete units of shapes, lines, and dimensions indicated, within fabrication tolerances specified.
1. Form joints are not permitted on faces exposed to view in the finished work.

Select one option from subparagraph below; show details on Drawings or revise description to add dimensions. Sharp edges or corners of precast concrete units are vulnerable to chipping.

2. Edge and Corner Treatment: Uniformly **(chamfered) (radiused)**.

2.15 THIN BRICK FACINGS

Retain this Article if using thin brick facings on architectural precast concrete units.

A. Place form liner templates accurately to provide grid for brick facings. Provide solid backing and supports to maintain stability of liners while placing bricks and during concrete placement.

B. Match appearance of sample panel(s).

C. Securely place brick units face down into form liner pockets and place concrete backing mixture.

D. After stripping units, clean faces and joints of brick facing.

2.16 STONE VENEER FACINGS

Retain this Article if stone facing is required. Refer to Division 04 Section "Exterior Stone Cladding".

A. Accurately position stone facings to comply with requirements and in locations indicated on Shop Drawings. Install anchors, supports, and other attachments indicated or necessary to secure stone in place. Maintain projection requirements of stone anchors into concrete substrate. Orient stone veining in direction indicated on Shop Drawings. Keep reinforcement a minimum of $^3/_4$ in. (19 mm) from the back surface of stone. Use continuous spacers to obtain uniform joints of widths indicated and with edges and faces aligned according to established relationships and indicated tolerances. Ensure no passage of precast concrete matrix to stone surface.

B. See Division 07 Section "Joint Sealants" for furnishing and installing sealant backings and sealant into stone-to-stone joints and stone-to-concrete joints. Apply a continuous sealant bead along both sides and top of precast concrete panels at the stone/precast concrete interface using the bond breaker as a joint filler backer. Do not seal panel bottom edge.

Retain one of two subparagraphs below if sealing dowel holes. Use sealant if a flexible filler is required; use epoxy if a rigid filler is required.

1. Fill anchor holes with low modulus polyurethane sealant filler and install anchors.
2. Fill anchor holes with epoxy filler and install anchors with minimum $^1/_2$ in. (13 mm) long, 60 durometer elastomeric sleeve at the back surface of the stone.

Retain one of two subparagraphs below. PCI recommends preventing bond between stone facing and precast concrete to minimize bowing, cracking, and staining of stone.

3. Install 6 to 10 mil (0.15 to 0.25 mm) thick polyethylene sheet to prevent bond between back of stone facing and concrete substrate.
4. Install $^1/_8$ in. (3 mm) thick polyethylene-foam bond breaker to prevent bond between back of stone facing and concrete substrate.

PCI recommends anchor spacing be determined prior to bidding. Retain below if precaster is to test stone anchors for shear and tension. ASTM E 488 is preferred as ASTM C 1354 does not include the influence of the precast concrete backup.

C. Stone Anchor Shear and Tensile Testing: Engage accredited testing laboratory acceptable to the Architect to evaluate and test the proposed stone anchorage system. Test for shear and tensile strength of proposed stone anchorage system in accordance with ASTM E 488 or ASTM C 1354 modified as follows:

1. Prior to testing, submit for approval a description of the test assembly (including pertinent data on materials), test apparatus, and procedures.
2. Test 12 in. by 12 in. (300 mm by 300 mm) samples of stone affixed to testing apparatus through proposed anchorages. Provide 2 sets of 6 stone samples each. One set for shear load testing and the other set for tensile load testing.
3. Test stone anchors of the sizes and shapes proposed for the installation.
   a. Test the assembly to failure and record the test load at failure. Record the type of failure, anchor pullout or stone breakage, and any other pertinent information, in accordance with the requirements of ASTM E 488.

Retain subparagraph below and revise anchor spacing if required as a result of preconstruction testing of stone anchors for shear and tension specified in Division 04 Section "Exterior Stone Cladding."

D. Stone to Precast Concrete Anchorages: Provide anchors in numbers, types and locations required to satisfy specified performance criteria, but not less than two anchors per stone unit of less than 2 ft^2 (0.19 m^2) in area and four anchors per unit of less than 12 ft^2 (1.1 m^2) in area; and for units larger than 12 ft^2 (1.1 m^2) in area, provide anchors spaced not more than 24 in. (600 mm) on center both horizontally and vertically. Locate anchors a minimum of 6 in. (150 mm) from stone edge.

2.17 FABRICATION

Coordinate with other trades for installation of cast-in items.

A. Cast-in Anchors, Inserts, Plates, Angles, and Other Anchorage Hardware: Fabricate anchorage hardware with sufficient anchorage and embedment to comply with design requirements. Accurately position for attachment of loose hardware and secure in place during precasting operations. Locate anchorage hardware where it does not affect position of main reinforcement or concrete placement.

1. Weld headed studs and deformed bar anchors used for anchorage according to AWS D1.1/D1.1M and AWS C5.4, "Recommended Practices for Stud Welding."

Coordinate paragraph below with Division 05 Section "Metal Fabrications" for furnishing and installing loose hardware items.

B. Furnish loose hardware items including steel plates, clip angles, seat angles, anchors, dowels, cramps, hangers, and other hardware shapes for securing architectural precast concrete units to supporting and adjacent construction.

C. Cast in reglets, slots, holes, and other accessories in architectural precast concrete units as indicated on Contract Drawings.

Delete first paragraph below if not applicable.

D. Cast in openings larger than 10 in. (250 mm) in any dimension. Do not drill or cut openings or prestressing strand without of Architect's approval.

E. Reinforcement: Comply with recommendations in PCI MNL 117 for fabrication, placing, and supporting reinforcement.

1. Clean reinforcement of loose rust and mill scale, earth, and other materials that reduce or destroy the bond with concrete. When damage to epoxy-coated reinforcing exceeds limits specified in ASTM A 775/A 775M, repair with patching material compatible with coating material and epoxy coat bar ends after cutting.
2. Accurately position, support, and secure reinforcement against displacement during concrete- placement and consolidation operations. Completely conceal support devices to prevent exposure on finished surfaces.
3. Place reinforcing steel and prestressing tendon to maintain at least $^3/_4$ in. (19 mm) minimum concrete cover. Increase cover requirements for reinforcing steel to $1^1/_2$ in. (38 mm) when units are exposed to corrosive environment or severe exposure conditions. Arrange, space, and securely tie bars and bar supports to hold reinforcement in position while placing concrete. Direct wire tie ends away from finished, exposed concrete surfaces.
4. Install welded wire reinforcement in lengths as long as practicable. Lap adjoining pieces at least one full mesh spacing and wire tie laps, where required by design. Offset laps of adjoining widths to prevent continuous laps in either direction.

F. Reinforce architectural precast concrete units to resist handling, transportation and erection stresses, and specified in-place loads, whichever governs.

Delete first paragraph and subparagraphs below if prestressed architectural precast concrete units are not required. Option to prestress may be left to fabricator if objective is to aid in handling and to control cracking of units during installation.

G. Prestress tendons for architectural precast concrete units by pretensioning or post-tensioning methods. Comply with PCI MNL 117.

Revise release or post-tensioning strength in subparagraph below to an actual compressive strength if required. A concrete strength in the range of 2500 psi (17.2 MPa) to 4000 psi (27.6 MPa) at release does not appreciably affect bond transfer length.

1. Delay detensioning or post-tensioning of precast, prestressed architectural precast concrete units until concrete has reached its indicated minimum design release compressive strength as established by test cylinders cured under the same conditions as concrete member.
2. Detension pretensioned tendons either by gradually releasing tensioning jacks or by heat-cutting tendons, using a sequence and pattern to prevent shock or unbalanced loading.
3. If concrete has been heat cured, detension while concrete is still warm and moist to avoid dimensional changes that may cause cracking or undesirable stresses.
4. Protect strand ends and anchorages with bituminous, zinc-rich, or epoxy paint to avoid corrosion and possible rust spots.

H. Comply with requirements in PCI MNL 117 and requirements in this Section for measuring, mixing, transporting, and placing concrete. After concrete batching, no additional water may be added.

Retain first paragraph below if a separate face mixture is required or is fabricator's option.

I. Place face mixture to a minimum thickness after consolidation of the greater of 1 in. (25 mm) or 1.5 times the nominal maximum aggregate size, but not less than the minimum reinforcing cover as indicated on Contract Drawings.
1. Use a single design mixture for those units in which more than one major face (edge) is exposed.
2. Where only one face of unit is exposed, at the fabricator's option, either of the following mixture design/casting techniques may be used:
   a. A single design mixture throughout the entire thickness of panel.
   b. Separate mixtures for face and backup concrete; using cement and aggregates for each type as appropriate, for consecutive placement in the mold. Use cement and aggregate specified for face mixture. Use cement and aggregate for backup mixture complying with specified criteria or as selected by the fabricator.

J. Place concrete in a continuous operation to prevent seams or planes of weakness from forming in precast concrete units.
1. Place backup concrete to ensure bond with face-mixture concrete.

K. Thoroughly consolidate placed concrete by internal and/or external vibration without dislocating or damaging reinforcement and built-in items, and minimize pour lines, honeycombing, or entrapped air voids on surfaces. Use equipment and procedures complying with PCI MNL 117.
1. Place self-consolidating concrete without vibration in accordance with PCI TR-6 "Interim Guidelines for the Use of Self-Consolidating Concrete."

L. Comply with PCI MNL 117 procedures for hot- and cold-weather concrete placement.

M. Identify pickup points of architectural precast concrete units and orientation in structure with permanent markings, complying with markings indicated on Shop Drawings. Imprint or permanently mark casting date on each architectural precast concrete unit on a surface that will not show in finished structure.

N. Cure concrete, according to requirements in PCI MNL 117, by moisture retention without heat or by accelerated heat curing using low-pressure live steam or radiant heat and moisture. Cure units until the compressive strength is high enough to ensure that stripping does not have an effect on the performance or appearance of final product.

O. Repair damaged architectural precast concrete units to meet acceptability requirements in PCI MNL 117 and Architect's approval.

2.18 INSULATED PANEL CASTING

Delete this Article if integrally insulated panels are not required.

A. Cast and screed wythe supported by mold.

B. Place insulation boards, abutting edges and ends of adjacent boards. Insert wythe connectors through insulation, and consolidate concrete around connectors according to connector manufacturer's written instructions.

C. Cast and screed top wythe to meet required finish.

2.19 FABRICATION TOLERANCES

A. Fabricate architectural precast concrete units of shapes, lines and dimensions indicated, so each finished unit complies with PCI MNL 117 product tolerances as well as position tolerances for cast-in items.

Select paragraph above or first paragraph and subparagraphs below. Usually retain above unless tolerances for Project deviate from PCI recommendations. PCI MNL 117 product tolerances, referenced above and listed below, are standardized throughout the industry. For architectural trim units such as sills, lintels, coping, cornices, quoins, medallions, bollards, benches, planters, and pavers, tolerances are listed in PCI MNL 135, *Tolerance Manual for Precast and Prestressed Concrete Construction*.

B. Fabricate architectural precast concrete units of shapes, lines and dimensions indicated, so each finished unit complies with the following product tolerances.

1. Overall Height and Width of Units, Measured at the Face Exposed to View: As follows:
   a. 10 ft (3 m) or under, Plus or Minus $^1/_8$ in. (±3 mm).
   b. 10 to 20 ft (3 to 6 m), Plus $^1/_8$ in. (+3 mm), Minus $^3/_{16}$ in. (-5 mm).
   c. 20 to 40 ft (6 to 12 m), Plus or Minus $^1/_4$ in. (±6 mm).
   d. Each additional 10 ft (3 m), add Plus or Minus $^1/_{16}$ in. (±1.6 mm).
2. Overall Height and Width of Units, Measured at the Face Not Exposed to View: As follows:
   a. 10 ft (3 m) or under, Plus or Minus $^1/_4$ in. (±6 mm).
   b. 10 to 20 ft (3 to 6 m), Plus $^1/_4$ in. (+6 mm), Minus $^3/_8$ in. (-10 mm).
   c. 20 to 40 ft (6 to 12 m), Plus or Minus $^3/_8$ in. (±10 mm).
   d. Each additional 10 ft (3 m), add Plus or Minus $^1/_8$ in. (±3 mm).
3. Total Thickness or Flange Thickness: Plus $^1/_4$ in. (+6 mm), Minus $^1/_8$ in. (-3 mm).
4. Rib Width: Plus or Minus $^1/_8$ in. (±3 mm).
5. Rib to Edge of Flange: Plus or Minus $^1/_8$ in. (±3 mm).
6. Distance between Ribs: Plus or Minus $^1/_8$ in. (±3 mm).
7. Variation from Square or Designated Skew (Difference in Length of the Two Diagonal Measurements): Plus or Minus $^1/_8$ in. per 72 in. (±3 mm per 2 m) or $^1/_2$ in. (13 mm) total, whichever is greater.

8. Length and Width of Blockouts and Openings within One Unit: Plus or Minus $^1/_4$ in. (±6 mm).
9. Location and Dimensions of Blockouts Hidden from View and Used for HVAC and Utility Penetrations: Plus or Minus $^3/_4$ in. (±19 mm).
10. Dimensions of Haunches: Plus or Minus $^1/_4$ in. (±6 mm).
11. Haunch Bearing Surface Deviation from Specified Plane: Plus or Minus $^1/_8$ in. (±3 mm).
12. Difference in Relative Position of Adjacent Haunch Bearing Surfaces from Specified Relative Position: Plus or Minus $^1/_4$ in. (±6 mm).
13. Bowing: Plus or Minus *L*/360, maximum 1 in. (25 mm).
14. Local Smoothness: $^1/_4$ in. per 10 ft (6 mm per 3 m).
15. Warping: $^1/_{16}$ in. per 12 in. (1.6 mm per 300 mm) of distance from the nearest adjacent corner.
16. Tipping and Flushness of Plates: Plus or Minus $^1/_4$ in. (±6 mm).
17. Dimensions of Architectural Features and Rustications: Plus or Minus $^1/_8$ in. (±3 mm).

C. Position Tolerances: For cast-in items measured from datum line location, as indicated on Shop Drawings.

1. Weld Plates: Plus or Minus 1 in. (±25 mm).
2. Inserts: Plus or Minus $^1/_2$ in. (±13 mm).
3. Handling Devices: Plus or Minus 3 in. (±75 mm).
4. Reinforcing Steel and Welded Wire Reinforcement: Plus or Minus $^1/_4$ in. (±6 mm) where position has structural implications or affects concrete cover; otherwise, Plus or Minus $^1/_2$ in. (±13 mm).
5. Reinforcing Steel Extending out of Member: Plus or Minus $^1/_2$ in. (±13 mm) of plan dimensions.
6. Tendons: Plus or Minus $^1/_4$ in. (±6 mm), perpendicular to panel; Plus or Minus 1 in. (±25 mm), parallel to panel.
7. Location of Rustication Joints: Plus or Minus $^1/_8$ in. (±3 mm).
8. Location of Opening within Panel: Plus or Minus $^1/_4$ in. (±6 mm).
9. Location of Flashing Reglets: Plus or Minus $^1/_4$ in. (±6 mm).
10. Location of Flashing Reglets at Edge of Panel: Plus or Minus $^1/_8$ in. (±3 mm).
11. Reglets for Glazing Gaskets: Plus or Minus $^1/_8$ in. (±3 mm).
12. Electrical Outlets, Hose Bibs: Plus or Minus $^1/_2$ in. (±13 mm).
13. Location of Bearing Surface from End of Member: Plus or Minus $^1/_4$ in. (±6 mm).
14. Allowable Rotation of Plate, Channel Inserts, Electrical Boxes: 2-degree rotation or $^1/_4$ in. (6 mm) maximum measured at perimeter of insert.
15. Position of Sleeve: Plus or Minus $^1/_2$ in. (±13 mm).
16. Location of Window Washer Track or Buttons: Plus or Minus $^1/_8$ in. (±3 mm).

Delete paragraph below if brick faced architectural units are not used. The number of bricks allowed these misalignments should be limited to 2% of the bricks on the unit.

D. Brick-Faced Architectural Precast Concrete Units.

1. Alignment of mortar joints:
   a. Jog in Alignment: $^1/_8$ in. (3 mm).
   b. Alignment with Panel Centerline: Plus or Minus $^1/_8$ in. (±3 mm).
2. Variation in Width of Exposed Mortar Joints: Plus or Minus $^1/_8$ in. (±3 mm).
3. Tipping of Individual Bricks from the Panel Plane of Exposed Brick Surface: Plus 0 in. (+0 mm); Minus $^1/_4$ in. (-6 mm) ≤ depth of form liner joint.
4. Exposed Brick Surface Parallel to Primary Control Surface of Panel: Plus $^1/_4$ in. (+6 mm); Minus $^1/_8$ in. (-3 mm).
5. Individual Brick Step in Face from Panel Plane of Exposed Brick Surface: Plus 0 in. (+0 mm); Minus $^1/_4$ in. (-6 mm) ≤ depth of form liner joint.

Delete paragraph and subparagraphs below if stone veneer–faced architectural precast concrete units are not used.

E. Stone Veneer–Faced Architectural Precast Concrete Units.

Tolerances below are generally appropriate for smooth-finished stone. Retain, delete, or revise to suit Project.

1. Variation in Cross-Sectional Dimensions: For thickness of walls from dimensions indicated: Plus or Minus $^1/_4$ in. (±6 mm).
2. Variation in Joint Width: $^1/_8$ in. in 36 in. (3 mm in 900 mm) or a quarter of nominal joint width, whichever is less.

Revise or delete below for natural-cleft, thermal, and similar finishes.

3. Variation in Plane between Adjacent Stone Units (Lipping): $^1/_{16}$ in (1.6 mm) difference between planes of adjacent units.

2.20 FINISHES

A. Exposed panel faces shall be free of joint marks, grain, and other obvious defects. Corners, including false joints shall be uniform, straight, and sharp. Finish exposed-face surfaces of architectural precast concrete units to match approved **(design reference sample) (sample panels) (mockups)** and as follows:

This Article presumes Architect has preapproved one or more design reference samples. Include complete description of design reference sample here. If preapproving fabricators, coordinate with "Fabricators" Article. Revise if multiple samples are approved.

1. Design Reference Sample: <**Insert description and identify fabricator and code number of sample.**>

Delete subparagraph below if not required. PCI published numbered, color photographs of 428 precast concrete finishes. See PCI's website at www.pci.org for more information. If retaining, revise and add reference number. Add reference number combinations if more than one finish is required.

2. PCI's *Architectural Precast Concrete –Color and Texture Selection Guide*, of plate numbers indicated.

Select type of finish from subparagraphs below if needed. If more than one finish is required, add locations to finish descriptions or indicate on Drawings. Add more detailed descriptions of finishes outlined below if greater definition is required, such as (light), (medium), or (deep). Remove matrix to a maximum depth of one-third the average diameter of coarse aggregate but not more than one-half the diameter of smallest-sized coarse aggregate. See PCI MNL 117 for more information on finishes. An as-cast finish generally results in a mottled surface or non-uniform finish.

3. As-Cast Surface Finish: Provide surfaces free of excessive air voids, sand streaks, and honeycombs.
4. Textured-Surface Finish: Impart texture by form liners with surfaces free of excessive air voids, sand streaks, and honeycombs, with uniform color and texture.
5. Bushhammer Finish: Use power or hand tools to remove matrix and fracture coarse aggregates.
6. Exposed Aggregate Finish: Use chemical retarding agents applied to molds, and washing and brushing procedures, to expose aggregate and surrounding matrix surfaces after form removal.

7. Abrasive-Blast Finish: Use abrasive grit, equipment, application techniques, and cleaning procedures to expose aggregate and surrounding matrix surfaces.
8. Acid-Etched Finish: Use acid and hot-water solution, equipment, application techniques, and cleaning procedures to expose aggregate and surrounding matrix surfaces. Protect hardware, connections, and insulation from acid attack.
9. Honed Finish: Use continuous mechanical abrasion with fine grit, followed by filling and rubbing procedures.
10. Polished Finish: Use continuous mechanical abrasion with fine grit, followed by filling and rubbing procedures.
11. Sand-Embedment Finish: Use selected stones placed in a sand bed in bottom of mold, with sand removed after curing.
12. Thin Brick Facings: Refer to "Thin Brick Facings" Article.
13. Stone Veneer Facings: Refer to "Stone Veneer Facings" Article.

B. Finish exposed **(top) (bottom) (back)** surfaces of architectural precast concrete units to match face-surface finish.

Revise finish in paragraph below to light-broom, stippled, or float finish, if necessary. Upgrade to steel-trowel finish if surface is in contact with materials requiring a smooth finish.

C. Finish unexposed surfaces of architectural precast concrete units with as-cast finish.

Retain paragraph above or below if applicable. Revise below to float finish or light-broom finish if steel-trowel finish is unnecessary.

D. Finish unexposed surfaces **(top) (back)** of architectural precast concrete units by steel-trowel finish.

2.21 SOURCE QUALITY CONTROL

Always retain paragraph below because it establishes a minimum standard of plant testing and inspecting. PCI MNL 117 mandates source testing requirements and a plant "Quality Systems Manual." PCI certification also ensures periodic auditing of plants for compliance with requirements in PCI MNL 117.

A. Quality-Control Testing: Test and inspect precast concrete according to PCI MNL 117 requirements. If using self-consolidating concrete also test and inspect according to PCI TR-6 "Interim Guidelines for the Use of Self-Consolidating Concrete."

Delete first paragraph and subparagraph below if not required. PCI certification would normally be acceptable to authorities having jurisdiction without further monitoring of plant quality control and testing program by Owner.

B. In addition to PCI Certification, Owner will employ an accredited independent testing agency to evaluate architectural precast concrete fabricator's quality-control and testing methods.
1. Allow Owner's testing agency access to material storage areas, concrete production equipment, and concrete placement and curing facilities. Cooperate with Owner's testing agency and provide samples of materials and concrete mixtures as may be requested for additional testing and evaluation.

C. Strength of precast concrete units will be considered deficient if units fail to comply with ACI 318 (ACI 318M) concrete strength requirements.

Review testing and acceptance criteria with structural engineer. In first paragraph and subparagraphs below, add criteria for load tests if required.

D. Testing: If there is evidence that strength of precast concrete units may be deficient or may not comply with ACI 318 (ACI 318M) requirements, fabricator will employ an independent testing agency to obtain, prepare, and test cores drilled from hardened concrete to determine compressive strength according to ASTM C 42/C 42M.

1. A minimum of three representative cores will be taken from units of suspect strength, from locations directed by Architect.
2. Cores will be tested in an air-dry condition.
3. Strength of concrete for each series of three cores will be considered satisfactory if the average compressive strength is equal to at least 85% of the 28-day design compressive strength and no single core is less than 75% of the 28-day design compressive strength.
4. Test results will be reported in writing on the same day that tests are performed, with copies to Architect, Contractor, and precast concrete fabricator. Test reports will include the following:
   a. Project identification name and number.
   b. Date when tests were performed.
   c. Name of precast concrete fabricator.
   d. Name of concrete testing agency.
   e. Identification letter, name, and type of precast concrete unit(s) represented by core tests; design compressive strength; type of break; compressive strength at breaks, corrected for length-diameter ratio; and direction of applied load to core in relation to horizontal plane of concrete as placed.

E. Patching: If core test results are satisfactory and precast concrete units comply with requirements, clean and dampen core holes and solidly fill with precast concrete mixture that has no coarse aggregate, and finish to match adjacent precast concrete surfaces.

F. Defective Work: Architectural precast concrete units that do not comply with acceptability requirements in PCI MNL 117, including concrete strength, manufacturing tolerances, and color and texture range are unacceptable. Chipped, spalled, or cracked units may be repaired, if repaired units match the visual mock-up. The Architect reserves the right to reject any unit if it does not match the accepted sample panel or visual mock-up. Replace unacceptable units with precast concrete units that comply with requirements.

PART 3 – EXECUTION

3.1 PREPARATION

A. Deliver anchorage devices for precast concrete units that are embedded in or attached to the building structural frame or foundation before start of such work. Provide locations, setting diagrams, and templates for the proper installation of each anchorage device.

3.2 EXAMINATION

A. Examine supporting structural frame or foundation and conditions for compliance with requirements for installation tolerances, true and level bearing surfaces, and other conditions affecting precast concrete performance.

B. Proceed with precast concrete installation only after unsatisfactory conditions have been corrected.

C. Do not install precast concrete units until supporting cast-in-place concrete building structural framing has attained minimum allowable design compressive strength or supporting steel or other structure is structurally ready to receive loads from precast concrete units.

3.3 ERECTION

A. Install loose clips, hangers, bearing pads, and other accessories required for connecting architectural precast concrete units to supporting members and backup materials.

Retain one of two paragraphs below

B. Structural steel fabricator to supply and install miscellaneous steel preweld connection hardware in the shop.

C. Precaster or erector to supply and install miscellaneous steel preweld connection hardware in the field.

D. Erect architectural precast concrete level, plumb, and square within the specified allowable erection tolerances. Provide temporary supports and bracing as required to maintain position, stability, and alignment of units until permanent connections are completed.

1. Install steel or plastic spacing shims as precast concrete units are being erected. Tack weld steel shims to each other to prevent shims from separating.
2. Maintain horizontal and vertical joint alignment and uniform joint width as erection progresses.
3. Remove projecting lifting devices and use sand-cement grout to fill voids within recessed lifting devices flush with surface of adjacent precast concrete surfaces when recess is exposed.
4. Unless otherwise indicated, provide for uniform joint widths of $^3/_4$ in. (19 mm).

E. Connect architectural precast concrete units in position by bolting, welding, grouting, or as otherwise indicated on Shop (Erection) Drawings. Remove temporary shims, wedges, and spacers as soon as practical after connecting and/or grouting are completed.

1. Disruption of roof flashing continuity by connections is not permitted; concealment within roof insulation is acceptable.

F. Welding: Comply with applicable AWS D1.1/D1.1M and AWS D1.4 requirements for welding, welding electrodes, appearance of welds, quality of welds, and methods used in correcting welding work.

1. Protect architectural precast concrete units and bearing pads from damage during field welding or cutting operations and provide noncombustible shields as required.
2. Welds not specified shall be continuous fillet welds, using not less than the minimum fillet as specified by AWS.
3. Clean weld-affected metal surfaces with chipping hammer followed by brushing and then reprime damaged painted surfaces in accordance with paint manufacturer's recommendations.

Retain last subparagraph above or first subparagraph below.

4. Clean weld-affected metal surfaces with chipping hammer followed by brushing and then apply a minimum 0.004-in.-thick (0.1 mm) coat of galvanized repair paint to galvanized surfaces in conformance with ASTM A 780.
5. Visually inspect all welds critical to precast concrete connections. Visually check all welds for completion and remove, reweld or repair all defective welds, if services of AWS-certified welding inspector are not furnished by Owner.

G. At bolted connections, use lock washers, tack welding, or other approved means to prevent loosening of nuts after final adjustment.

1. Where slotted connections are used, check bolt position and tightness. For sliding connections, properly secure bolt but allow bolt to move within connection slot. For friction connections, apply specified bolt torque and check 25% of bolts at random by calibrated torque wrench.

In paragraph below revise locations and extent of grouting if required.

H. Grouting or Dry-Packing Connections and Joints: Indicate joints to be grouted and any critical grouting sequences on Shop (Erection) Drawings. Grout connections where required or indicated on Shop (Erection) Drawings. Retain flowable grout in place until strong enough to support itself. Alternatively pack spaces with stiff dry pack grout material, tamping until voids are completely filled. Place grout and finish smooth, level, and plumb with adjacent concrete surfaces. Promptly remove grout material from exposed surfaces before it affects finishes or hardens. Keep grouted joints damp for not less than 24 hours after initial set.

3.4 ERECTION TOLERANCES

A. Erect architectural precast concrete units level, plumb, square, true, and in alignment without exceeding the noncumulative erection tolerances of PCI MNL 117, Appendix I.

Select paragraph above or paragraph and subparagraphs below. Usually retain above unless tolerances for Project deviate from PCI recommendations. PCI MNL 117 erection tolerances are referenced above and are listed below. If tighter tolerances are required for Project, coordinate with fabrication tolerances for precast concrete as well as erection tolerances for supporting construction.

B. Erect architectural precast concrete units level, plumb, square, and true, without exceeding the following noncumulative erection tolerances.

1. Plan Location from Building Grid Datum: Plus or Minus $^1/_2$ in. (±13 mm).
2. Plan Location from Centerline of Steel Support: Plus or Minus $^1/_2$ in. (±13 mm).
3. Top Elevation from Nominal Top Elevation:
   a. Exposed Individual Panel: Plus or Minus $^1/_4$ in. (±6 mm).
   b. Non-Exposed Individual Panel: Plus or Minus $^1/_2$ in. (±13 mm).
4. Support Elevation from Nominal Support Elevation:
   a. Maximum Low: $^1/_2$ in. (13 mm).
   b. Maximum High: $^1/_4$ in. (6 mm).
5. Maximum Plumb Variation over the Lesser of Height of Structure or 100 ft (30 m): 1 in. (25 mm).
6. Plumb in Any 10 ft (3 m) of Element Height: $^1/_4$ in. (6 mm).
7. Maximum Jog in Alignment of Matching Edges:
   a. Exposed Panel Relative to Adjacent Panel: $^1/_4$ in. (6 mm).
   b. Non-Exposed Panel Relative to Adjacent Panel: $^1/_2$ in. (13 mm).
8. Joint Width (Governs over Joint Taper): Plus or Minus $^1/_4$ in. (±6mm).
9. Maximum Joint Taper: $^3/_8$ in. (10 mm).
10. Joint Taper over 10 ft (3 m): $^1/_4$ in. (6 mm).
11. Maximum Jog in Alignment of Matching Faces: $^1/_4$ in. (6 mm).
12. Differential Bowing or Camber, as Erected, between Adjacent Members of Same Design: $^1/_4$ in. (6 mm).
13. Opening Height between Spandrels: Plus or Minus $^1/_4$ in. (± 6 mm).

3.5 FIELD QUALITY CONTROL

Retain first option in paragraph below if Owner engages a special inspector. If authorities having jurisdiction permit Contractor to engage a special inspector, retain second opotion and retain option for submitting special inspection reports in Part 1 "Submittals" Article.

A. Special Inspections: [**Owner will engage**][**Contractor will engage**] a qualified special inspector to perform the following special inspections and prepare reports:
1. Erection of loadbearing precast concrete members.
2. <**Insert special inspections**.>

Retain first paragraph below if field testing and inspecting are required, with or without paragraph above, to identify who shall perform tests and inspections. If retaining second option, retain requirement for field quality-control test reports in Part 1 "Submittals" Article.

B. Testing: Owner will engage accredited independent testing and inspecting agency to perform field tests and inspections and prepare reports.
1. Field welds will be subject to visual inspections and nondestructive testing in accordance with ASTM E165 or ASTM E 709.
2. Testing agency will report test results promptly and in writing to Contractor and Architect.

C. Repair or remove and replace work where tests and inspections indicate that it does not comply with specified requirements.

D. Additional testing and inspecting, at Erector's expense, will be performed to determine compliance of corrected work with specified requirements.

3.6 REPAIRS

Production chips, cracks, and spalls should have been corrected at manufacturer's plant. Blemishes occurring after delivery are normally repaired before final joint sealing and cleaning as weather permits.

A. Repairs will be permitted provided structural adequacy of units and appearance are not impaired.

B. Repair damaged units to meet acceptability requirements of PCI MNL 117.

The precast concrete fabricator should develop appropriate repair mixtures and techniques during the production sample approval process.

C. Mix patching materials and repair units so cured patches blend with color, texture, and uniformity of adjacent exposed surfaces and show no apparent line of demarcation between original and repaired work, when viewed in typical daylight illumination from a distance of 20 ft (6 m).

D. Prepare and repair damaged galvanized coatings with galvanizing repair paint according to ASTM A 780.

Retain paragraph above if using galvanized anchors, connections, and other items; retain first paragraph below if items are prime painted.

E. Wire brush, clean, and paint damaged prime-painted components with same type of shop primer.

F. Remove and replace damaged architectural precast concrete units when repairs do not comply with specified requirements.

3.7 CLEANING

Specify whether erector or precaster does cleaning under the responsibility of General Contractor.

A. Clean all surfaces of precast concrete to be exposed to view, as necessary, prior to shipping.

B. Clean mortar, plaster, fireproofing, weld slag, and any other deleterious material from concrete surfaces and adjacent materials immediately.

C. Clean exposed surfaces of precast concrete units after erection and completion of joint treatment to remove weld marks, dirt, stains and other markings.

1. Perform cleaning procedures, if necessary, according to precast concrete fabricator's recommendations. Protect adjacent work from staining or damage due to cleaning operations.
2. Do not use cleaning materials or processes that could change the appearance of exposed concrete finishes or damage adjacent materials.

END OF SECTION 034500

INDEX
BY SUBJECTS

For ease of reference and usage of this Manual an Index of the most common terms and key words follows:

A

Absorption 245, 254-256, 567
Acceptability . . 99, 107, 156, 235-236, 240-241, 266
Access 267, 290-291
Acid-Etching . . . . . see Finishes
Acoustical Properties 487-497
Composite Wall Considerations 493-496
Definitions. 487-488
Leaks and Flanking 496-497
Noise Criteria 491-493
Sound Absorption 489, 491
Sound Transmission 488-489
Windows 493-496
Admixtures 559-560
Advantages . . . . . .see Benefits
Aggregates 100-101, 148-150, 182, 559-560
Continuously Graded 111
Cost 59-60
Gap Graded 111
Polishing 207
Size 151
Aggregate Transparency 154-155
Air-Barrier 423, 444-447
Air-Entrainment 110, 254, 256, 568
Air Holes . . . . . .see Bug/Blow Holes
Air Infiltration (Leakage) 484
Air Pollutants 243
Air Traffic Control Towers 28
Air Voids . . . . . see Bug/Blow Holes
Albedo 393-394, 475-476
Alignment Connection . . . . . see Connections
Anchors 204-205
Anti-Graffiti Coatings 258
Appearance Uniformity . . . 59-60, 99-100, 109, 153, 157, 169, 174, 182, 184, 211
Applications 2-35
Cladding 2-23, 45-53, 63-69
Loadbearing Units 4-6, 8, 83-91
Miscellaneous 24-35
Approval . . . . . .
Samples 102-109
Production Units 104-108
Shop Drawings 299-300
Architectural Trim Units . . . . . .see Finishes
Arrises 125, 128-129
Art and Sculpture 24-26, 30-31, 34

B

Backup Mixture 109-110
Balustrades 32
Bearing (Direct and Eccentric) Connections. . . . . see Connections
Bearing Pads 322, 324, 562
Beam Rotation 283-284
Bell Towers 28-30
Benefits 6, 8, 13, 15, 21, 35-38, 211
Blast Resistance 497-525
Analyses Standards 499-500
Basics 498-499
Connections 314-315, 517-520
Design Concepts 506, 508-509
Effects 501-504
Façade Considerations 509
General 497-498
Glazing 520-523
Initial Costs 523-524
Loading 500-501
Modelling 501-502
Panel Design 509-511, 513
References 524-525
Reinforcement Requirements 508-509
Standoff Distance 504-507
Bowing 278-279, 297, 302
Sandwich Panels 458-459
Tolerances 348-350
Bracing 293, 299, 323
Brick Facing . . . . . see Finishes
Bug/Blow Holes 139, 153, 155, 169, 240
Building Shape 498
Building Tolerances 356-358
Bullnoses 125-127
Bushhammering . . . . . see Finishes

C

Carbonation 307-309
Cast Stone . . . . . see Finishes
Cantilevered Supports 70, 283-284
Cast-in-Place Concrete Frame Tolerances . . 357-358
Cellular Communication Towers 28-29
Cement 100, 254, 558-559
Color 144-145
Cost 59
Ceramic Tile . . . . . see Finishes
Certification
Field 38-39, 553
Personnel 38-39
Plant 36, 38, 270, 553
Chamfers 58, 207-208
Cladding 62-73
Bowing 278-279
Column Covers 280-281

Connections 280, 316
Deflection of Support 277-278
Design Considerations 276-281
Spandrels 282-285
Clay Product-Faced Precast Concrete . . . see Finishes
Cleaning 259-261, 297-298, 580
Clearance 279-280, 320-321, 362-363
Closed Shapes 111-112, 379-380
Coarse Aggregates 100, 148-150
Aggregate Transparency 154-155
Coefficients of Thermal Expansion 214
Color
Aggregate, Effects on 148-150
Control 100-101
Finishes, Effect on 149
Pigments 145-148
Texture, Effect on 144
Uniformity 145, 148, 150, 153
Column Covers 68, 138, 280-281
Clearance 513
Connections 332, 340-341
Erection 297
Insulation 281
Columns 27-28, 30-31
Erection 296
Concrete . . . . . .
Air-Entrained 110, 254, 256, 568
Assessment 109-111
Backup Mixtures 109-110
Carbonation 307-309
Cover 184, 306-307, 310, 570
Design Strength 110, 567
Durability 35, 110, 255-256
Face Mixtures 109-110
Fire Endurance 535
Lightweight Concrete 567
Mixtures 61, 566-568
Permeability 307
Strength 110, 567
Weathering. 255-256
Condensation 408, 417-447
Air Barriers 444-447
Climate, Effect on 418-419, 428-429, 446-447
Dew Point Analysis 441-444
Moisture Sources 418, 420
On Surface 420-423
Vapor Retarders 423-444
Within Wall 423, 442-444
Windows 447
Connections 267, 312-346
Alignment 332, 339-340
Anchorage 321-322
Bearing (Direct and Eccentric) 331-335
Blast Considerations 314-315, 517-520
Bolted 329
Chemical Anchors 330
Clearance 326-327
Column Covers 332, 340-341
Connection-Structure Interaction 316-320
Corrosion Protection 326-327
Design Considerations 313-315, 321-322
Design Responsibility 313
Details 331-346
Erection Considerations 297, 322-324
Expansion Anchors 329-330
Fastening Methods 327-330
Fireproofing 327-328, 535-536
General 312-313
Grouted 330
Handling and Erection 322-324
Hardware and Materials 61, 325-326, 560-562
Locations 315-319
Loads 274
Manufacturing Considerations 325
Post-Tensioned 330
Preweld 61
Seismic Considerations 314, 316-320
Shear Plates 322, 332, 338-339
Slab to Wall 333, 345-346
Soffit Hanger 332, 342
Special Conditions and Solutions 332, 342-343
Standardization 324, 329
Supply 330-331, 545-546
Tieback (Lateral) 321, 332, 336-338
Tolerances 320-321, 357
Wall to Foundation 333, 344
Wall to Wall 333, 339-340, 346
Welded 328-329
Wind Considerations 314
Construction Manager Responsibility 267-269
Continuously Graded Aggregate 111
Contract Documents 298-300, 313, 545
Estimates 45
Coordination 545-546
Copings 540-541
Corners 131, 133-138, 183, 190-191, 202-203
Sandwich Panels 459
Volumes Changes, Effect on 276-277
Cornices 27-28, 130-132
Corrosion Protection 310-312, 326-327
Corrosion Resistance 305-312
Cost
Aggregates 59-60
Cement 59
Erection 58, 290
Face Mixture 59
Factors 45-50, 53, 58, 60
Finishes 59-60
Handling 140-141
Hardware 61
Initial 36
Labor 59, 61
Life Cycle 36-37
Loadbearing Units 74
Material 59-60
Molds 54-55, 121

Pigment 59-60
Reinforcement 61
Sculpturing 121
Total Wall Analysis 62
Transportation 143
Cover 184, 306-307, 310, 570
Cracks 241, 300, 302, 309-310, 312, 328-329
Crazing 155, 241
Creep 276
Curtain Walls . . . . . see Cladding

D

Damage . . . . . see Repair
Definitions 39-43, 312-313, 390-391, 459-460, 487-488, 548
Deflection of Supporting Structure . . . 277-278, 321
Degrees of Exposure . . . 152, 159, 169, 174-175, 182
Demarcation Features 113-119, 177, 179, 210
Design . . . . . .
Checklist 273-274
Cladding 276-287
Considerations 1, 81-83 276-285
Criteria 272-273
Economy 50, 271, 314
General 271
Loads 274-275
Loadbearing Units 281-282, 285-286
Objectives 271-272
Options 61-62
Reference Sample 61
Responsibility 263-267, 269-270
Seismic 272
Structural 271-276
Detailing Considerations 207
Dew Point Analysis 441-444
Dimensioning 287, 289
Dissimilar Metals 325
Domes 2-3, 8, 14-15
Dowels 330
Draft 56, 108-109, 112-113
Drift 314, 316-319
Drips 244, 246-247, 250, 380-382, 390
Ductility 94, 313
Durability . . . . . see Concrete

E

Economy, Design 50, 271, 314
Edges 131, 133, 207
Efflorescence 148, 250-255
Cleaning 259-260
Energy Conservation 390-417
Albedo 393-394
Building Orientation 392
Building Shape 393
Daylighting 393
Definitions 390-391
Glazing 393
Energy Efficiency 37
Heat Capacity 410-412
Insulation 447-450, 455
Sandwich Panels 450-459
Shading 394-403
Thermal Bridges 407-410, 422
Thermal Mass 410, 412-417
Thermal Resistance (R-value) 402, 404-410
Energy Star 470-472
Envelope Mold 56-57
Environmental Impact 37
Epoxy-Coated Reinforcement 310-312
Erection
Access 267, 290-291
Bracing 293, 299, 323
Columns 296, 533-535
Column Covers 297, 533-535
Connections: see also Connections 290-295
Considerations 290-298, 322-324
Drawings 293, 298, 330
Mullions 297
Protection During 297
Responsibility 292-293
Soffit 297
Spandrels 297
Specifications 577-578
Structural Limitations 294-295
Survey 270
Tolerance 235, 350, 356-363, 578
Wall Panels 295-296
Expansion Anchors 329-330
Expansion Joints 366-368
Exposed Aggregate Finish . . . see Finishes, Retarded
Exposure Differences 138-139
Eyebrows 130-131

F

Façade Patterns 63
Face Mixture 109-110
Cost 59
False Joints 53, 58-59, 113-118
Fine Aggregates 100, 148, 254
Finishes
Acceptability 240-241
Acid-Etching 174-176
Architectural Trim Units (Cast Stone) 231-237
Flashing 234
Brick . . . . . see Clay Product-Faced
Bushhammering 182-184
Ceramic Tile 197-199, 203-204
Clay Product-Faced
Precast Concrete 187-206, 563-564, 567, 573
Benefits 188
Bond 200-201
Clay Product Selection 190
Corner Details 202-203
General Considerations 188, 190-191, 568

Patterns 190
PCI Thin Brick Standard 189, 563-564
Tolerances 203, 573
Color 144-150
Finishing, Effect on 149
Combination of 177-181
Cost 59-61
Demarcation Features 53, 58-59, 113-118, 125
Exposed Aggregate Finishes . . . . . see specific Finish
Exposure 152, 159, 169, 174-175, 182
Form Liners 160-167
Fractured Fin 185
Full Brick 204-206
General 153
Hammered Rib 185
Honed 206-210
Interior 239-240
Matching Precast and Cast-In-Place Concrete . . 238-239
Multiple Mixtures and
Textures Within a Single Unit 177-181
Painted 229-232
Polishing 206-210
Retarded 156-159
Returns 138-139
Sand or Abrasive Blasting 169-174
Sand Embedment 186-187
Smooth As-Cast 101, 153
Specifications 574-575
Stone Veneer-Faced Precast Concrete 211-229
Accents or Feature Strips 218, 227-229
Anchorage 214-217, 565, 570
Applications 218-229
Bondbreaker 214-215, 566
Jointing 217
Permeability 213
Properties 212, 569
Safety Factors 217
Sizes 213
Tolerances 213, 574
Terra Cotta 199-201
Texture 144, 150-152
Tooling . . . . . see Bushhammering
Weathering 248-250
Fire Barriers (Safing) 532-533
Fire Endurance 527-532
Aggregate, Effect of 527-529
Columns 533
Column Covers 533-535
Connections 535-536
Reinforcing Steel 535
Ribbed Panels 529-530
Sandwich Panels 530
Window Walls 530-532
Fire Resistance 37, 525-536
Flashing 205-206, 234, 539-540
Floor-to-Floor Height 74-75, 83
Formliners
Types 160, 167
Selection 160
Size 161
Texture 161
Formwork, Precast Concrete used as 94-97
Fractured Fin . . . . . see Finishes
Frame Shortening 279-280
Freeze-Thaw Tests 256
Full Brick
Anchors 204-205
Flashing 205-206
Shelf Angles 205
Weep Holes 206

G

Galvanized Reinforcement 304-305, 310-311
Gap Graded Aggregates 111
General Contractor/CM Responsibility 267-269
Glass Staining or Etching 387-390
Glazing . . . . . see Windows
Graffiti Repellents 258
Green Globes 472-473
Ground Floors, Precast Concrete Units for 46
Grouting 330

H

Hammered Rib . . . . . see Finishes
Handling of Precast Concrete Units . . 290-292, 322, 324-325
Heat Capacity 410-412
Heat Transmittance . . . . . see U Values
Honed . . . . . see Finishes
Hybrid Moment Resistant Frame 90-91

I

Initial Cost 36-37
Inserts 326
Insulated Wall Details 426-441
Insulation 281, 445, 566
Application 447-450, 572
Interfacing . . . . . see Joints and/or Tolerances
Interior Finishes 239-240
Connections 322

J

Joints 266, 364-377
Access 450
Architectural Treatment 375-376
Architectural Trim Units (Cast Stone) 234
Backing Materials 374-375
Below Grade 376-377
Detailing 368-369, 375-376
Expansion 366-368

False 368-369
Fire Protection 376-377
General 364
Installation 371, 373-375
Location 368
Maintenance 259
Materials 371-373
Number 368
Parapet 541-542
Primers 375
Responsibility . . . . . .
Sealant Depth 371
Seismic Seals 367-368
Single-Stage 364
Staggered 369, 375
Stone Veneer 217-218
Tolerances 359, 370
Treatment, Architectural 375-376
Two-Stage 365-367
Types 364-367
Weathering 368
Width 317-318, 359, 362, 366, 369-370
Windows 379-380

L

Lead Time 54-55, 211
LEED 468, 470-487
LEED Credits 473-487
Lettering 35, 168-169
Life Cycle Assessment (LCA) 464-465, 467-468
Life Cycle Cost 36, 463-464
Life Cycle Inventory (LCI) 464-468
Lifting Devices 291-292, 324-325
Light Shelf 131
Loadbearing Units
Applications 4-6, 8, 73-80, 83-91
Connections . 316, 319, 332-333, 344-346, 511-512
Design Considerations 80-83, 271, 281-282
Erection 296
Floor Plates 82
Floor-to-Floor Height 74-75, 83
General 48, 55, 73
Hybrid Moment Resistant Frame 90-91
Schedule 75-76
Shapes and Sizes 78-81, 282
Spandrels 73-74, 83, 285-286
Wall-to-Floor Ratio 74
Loads on Precast Concrete Units. 274-275

M

Maintenance 259-261
Marble Expansion 213
Master Mold 46, 50, 52, 54
Masonry Tie-Back Connections . . . . see Connections
Matching Precast and Cast-in-Place Concrete . . 238-239
Materials
Attached or Incorporated 386-387
Economy of 59-60
Specifications 557-567
Miscellaneous Applications 24-35
Mitered Corners 131, 133-138
Mix Design 61
Mockups 105-108, 266, 386, 555
Moisture Transfer Analysis 441-444
Molds 50-51
Lead Time 55
Cost 54, 121
Types 56-58
Mullions 68, 280-281, 297
Multiple Mixtures and Textures 119, 177-181, 210

N

Noise Criteria 491-493
Non-Loadbearing Spandrels . . . . . see Cladding
Non-Loadbearing Walls . . . . . see Cladding

O

Open Shapes 111-112, 379-380
Other Incorporated Materials 386

P

Paint . . . . . see Finishes
Panels
Arrangement 64
Rotation 316
Shape 315
Size 50, 58-60, 62, 78-81, 140-142, 287
Thickness 289
Translation 316
Panelization 58
Parapets
Copings 540-541
Details 539-542
Flashing 539-540
Joints 541-542
Patching 241, 325
Performance Requirements 548-550
Performance Specifications 546-547
Permeability 254, 307, 423-425
Permeance 423-426
Piece Size . . . . . see Panel Size
Pigments 145-147, 255
Cost 59-60
Polished and Honed . . . . . see Finishes
Post-Tensioning 303
Pre-Bid Process 268-269
Conference 269
Samples 104
Precast Concrete Forms for CIP Concrete 94-97

Precaster Responsibility 269-270
Prescriptive Specifications 546
Prestressing 289, 302-303
Production Approval Samples 104-108
Production Drawings 299
Protection
Anchorages 302
Concrete Surfaces 256-258, 297
Hardware 326-327
Reinforcement 310-312
Protective Coatings . . . . . see Sealers
Punched Windows 63, 85

Q

Quality Assurance 36, 38-39, 270, 552-555
Quality Control 39, 575-576, 578-579
Quirk 58, 131, 133-134, 136-138, 140

R

Radiused Precast Concrete 127-129
Rain: Effects on Buildings 242-248
Range Samples 106, 554
Reglets 538
Reinforcement 300-312
Bends 305
Corrosion Resistance 305-312
Cost 61
Cover 184, 306-307, 310, 570
Design 270
Epoxy-Coated 311-312
Galvanized 310-311
General 300-301
Minimum 301
Prestressing 302-303
Reinforcing Bars 302
Shadow Lines 304-305
Spacing 300
Specifications 557-558
Tack Welding 305
Types 300-303
Welded Wire Reinforcement 301
Repair 107, 218, 241-242, 579
Repetition 45, 50-54, 271-272
Responsibility 263-271
Architect 263-266
Connection Design 313
Construction Manager 267-269
Engineer of Record 266-267
Erector 270-271, 292-293
General 263-264
General Contractor 267-269
Precaster 265, 266, 269-270
Retarded . . . . . see Finishes
Returns 109, 138-139, 156-157, 232
Reveals 53, 58-59, 113-119, 125, 368-369
Ribs 122, 289
Roofing 536-543
Differential Wall-to-Roof Movement 538-539
Flashing 536-539
General 536
Scuppers 542-543
Wall to Parapet 440, 539-542
Rustications 53, 58-59, 113-118, 125, 177, 179

S

Safing Insulation 532-533
Samples
Assessment 100-101, 108-109
Design Reference 61, 551-552, 574
Development 100, 102-103
Information Required 103
Mockups 106-108, 555
Pre-Bid 104
Production Approval 104-105
Range 106, 554
Submittal 551-552
Weathering 109
Sand . . . . . see Fine Aggregate
Sand Embedment . . . . . see Finishes
Sand or Abrasive Blasting . . . . . see Finishes
Sandwich Wall Panels 81, 426-440, 450-459
Bowing 458-459
Fire Resistance 530
Insulation 455-456
Panel Size 457
Thermal Bridges 407-410, 422
Thermal Properties 407-410
Wythe Connectors 457-458
Wythe Thickness 456-457
Schedule
Cladding 35-36
Loadbearing Panels 75-76
Screen Units 396-397
Sculpture 24
Sculpturing of Panels 120-124, 289
Scuppers 542-543
Sealants . . . . . see Joints
Sealers 256-259, 373
Seismic Design
Connection Types 319-320
Panel Movements 316-319
Seals 367-368
Shearwalls 81, 92-94
Self-Cleaning Concrete 6-7
Sequential Casting 57-58, 139-140, 177
Shading 394-403
Shapes
Details 140-141
General 78-81
In Relation to Finishes 138-139
Open or Closed 111-112, 379-380

Shear Plates . . . . . see Connections
Shearwalls: Precast Concrete Units used as . . 81, 92-94
Shelf Angles 205
Shims 324, 327-328
Shipping . . . . . see Transportation
Shop Drawings 298-300
Approval 299-300
General 211
Review 299-300
Stone Veneer 211
Submittal 551
Shrinkage 275
Signs 35
Single Source Provider 37
Site Access 267, 290-291
Sizing of Units . . 50, 58-60, 62, 78-81, 140-142, 287
Slab to Wall Connections . . . . . see Connections
Slenderness Ratio 287
Smooth-Off-the-Mold . . . . . see Finishes
Soffit
Erection 297
Hanger Connections 332, 342
Solid Wall Panels 64
Smooth As-Cast . . . . . see Finishes
Sound Absorption 489-491
Sound Barriers 32-34
Sound Transmission Loss 488-490
Spandrel Panels . . . . . see Cladding also
Connections 283-284
Deflection 283-284
Design Considerations 282-285
Erection 297
General 66-67
Loadbearing 73-74, 83, 285-286
Rotation 285-286
Specification 545-580
Guide 547-580
Performance 546-547
Prescriptive 546
Stacked Panel 26-28, 49, 69-73, 286-287, 316
Stains . . . . . see Finishes
Stairs 32
Standoff Distance 504-507
Stone Veneer-Faced Precast Concrete . . see Finishes
Story Drift 314, 316-319
Structural Design of Units 270-276
Checklist 273-274
Design Criteria 272-273
Design Objectives 271-272
Determination of Loads 274-275
General Considerations 271
Volume changes 275-276
Structural Steel Framing Tolerances 357
Submittals 550-552
Sunscreens 32
Surface Aesthetics 35, 36, 99
Surface Condensation 420-423
Surface Out-of Planeness 349-350
Sustainability 37, 459-487
Concepts 460-463
Cost 461-464
Definitions 459-460
LEED Credits 469, 473-487
Life Cycle Analysis 463-468
Production of Precast Concrete 478-482
Rating Systems 469-473

T

Tack Welding 305
Tendon Anchorages, Protection 302
Terra Cotta . . . . . see Finishes
Texture . . . . . see also Finishes
Thermal Bridges 407-410, 422
Thermal Expansion, Coefficient of 275
Thermal Mass 410, 412-417
Thermal Resistance (R-value) 402, 404-410
Thickness
Facing Mixture 110, 571
Fire Resistance, Relation to 527-532
Panel 287, 289
Sandwich Panels 454, 530-532
Wythe 456-457
Tie-Back (Lateral) Connections . . . . . see Connections
Thin Brick 190-191, 202-203
Standard 189
Tolerances 347-364
Acceptability of Appearance 240-241
Anchor Bolts 358
Architectural Trim Units (Cost Stone) 233-235
Building Frame 356-357
Bowing 348-350
Clearances 362-363
Concrete Requirements 110
Connections 320-321, 357
Erection 235, 350, 356-363, 578
General 347
Interfacing 363-364
Joints 359, 370
Local Smoothness 349-350
Primary Control Surface 356
Product 347-355, 572-574
Reinforcement 307
Secondary Control Surface 356
Warping 348-350
Windows 112
Tooling . . . . . see Bushhammering (Finishes)
Top Floor: Usage for 47
Torsion 283-284
Towers 28-31
Transportation 140-144, 556
Two-Stage Joints 365-367
Two-Stage Precasting 57-58, 139-140, 177

U

Uniformity of Appearance . . 59-60, 99-102, 109, 153, 157, 169, 174, 182, 184, 211
Urban Heat Island 37, 393-394, 475-477
Uses of Precast Concrete: see Applications
U-values 405, 407

V

Vapor Retarders 423-444
Veneer-Faced Panels . . . . . see Finishes
Volume Changes 275-276, 313-314

W

Wall Panel Systems 62
Wall-Supporting Units 26-28, 49, 69-73
Wall-to-Floor Ratio 74-75
Wall to Foundation Connections . . . see Connections
Wall to Wall Connections . . . . . see Connections
Warping, Tolerances 348-350
Water Absorption . . . . . see Absorption
Water-Cement Ratio 100
Water Drips . . . . . see Drips
Water Leakage 441
Weathering 212, 242-250, 255-256
Absorption 245, 254-256, 567
Aggregate, Effect on 148-149
Causes 242-248
Concrete Design for 255-256
Efflorescence 250-255
General 242-248
Glass Staining 387-390
Joints 368-369
Sealers 256-258
Surface Finish 248-250
Water Drips . . . . . see Drips
Water Run-off 242-250
Waterfall 34-35
Weep Holes 206
Welded Wire Reinforcement 301
Welded Connections 328-329
Welding
Protection During 297
Stainless Steel 327
Windows
Acoustical Properties 493-496
Blast Resistance 520-523
Cleaning 259, 390
Condensation 447
Design Considerations 379-384
Detailing 382-384
Exposed Aggregate 380
Fire Endurance 530-532
Flashing 381
Frames 382, 386, 459, 521-522
General 379
Glazing 393, 493-496, 520-523
Installation 384-386
Joints 379-380
Mockups 386
Open and Closed Shape Panels 111-112, 382
Punched 63, 85
Sealant 380
Shading 394-403
Sills 382-383
Staining or Etching 387-390
Tolerances 379
Washing Systems 386-387
Weep Holes 381-382
Window Wall Panels 65-66
Wythe Connectors 457-458