NEXT D BEAMS

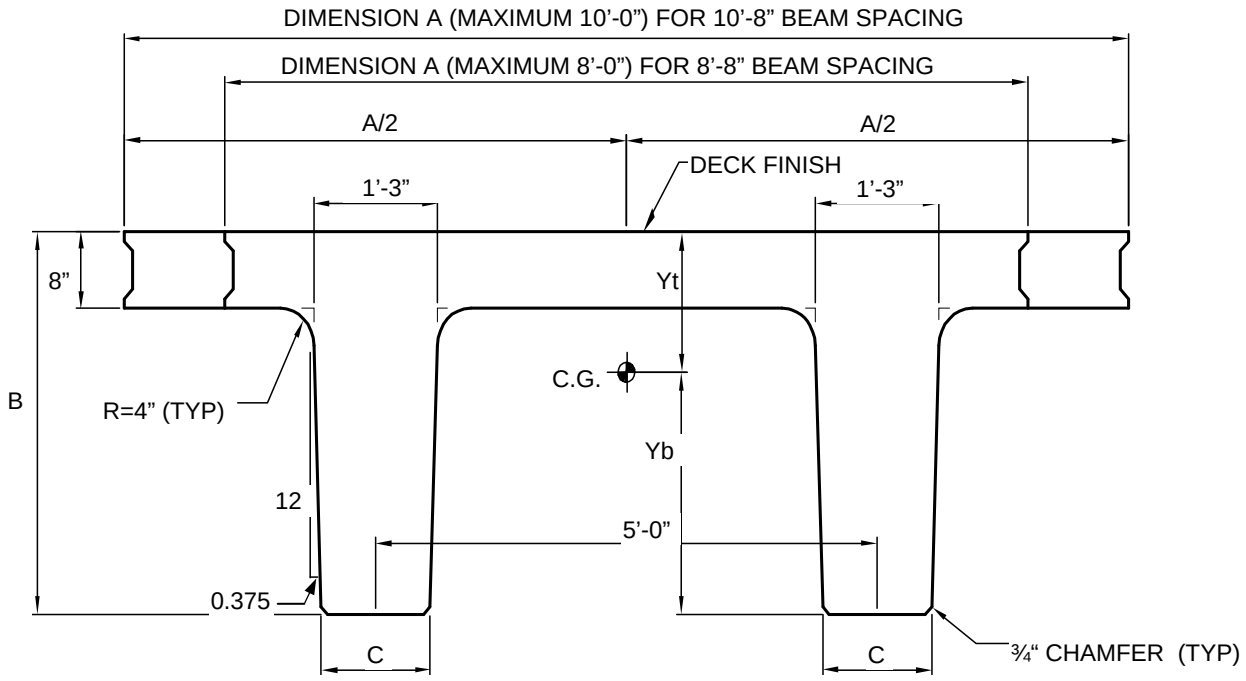

Beam Designation	Beam Width Inches	Beam Depth Inches	Base Stem Width Inches	Area IN^2	I IN^4	Yb Inches	Yt Inches	St IN^3	Sb IN^3	Weight PLF
	A	B	C			D	E			
Minimum Width Beams										
Next 40 D	96.00	40.00	13.00	1666	238059	25.47	14.54	16378	9348	1735
Next 36 D	96.00	36.00	13.25	1562	176674	23.03	12.97	13624	7671	1627
Next 32 D	96.00	32.00	13.50	1455	126111	20.57	11.43	11033	6131	1516
Next 28 D	96.00	28.00	13.75	1346	85651	18.06	9.94	8620	4742	1402
Maximum Width Beams										
Next 40 D	120.00	40.00	13.00	1858	258171	26.55	13.45	19201	9722	1935
Next 36 D	120.00	36.00	13.25	1754	191453	24.01	11.99	15973	7973	1827
Next 32 D	120.00	32.00	13.50	1647	136502	21.44	10.57	12920	6368	1716
Next 28 D	120.00	28.00	13.75	1538	92597	18.80	9.20	10069	4924	1602

NEXT F BEAMS

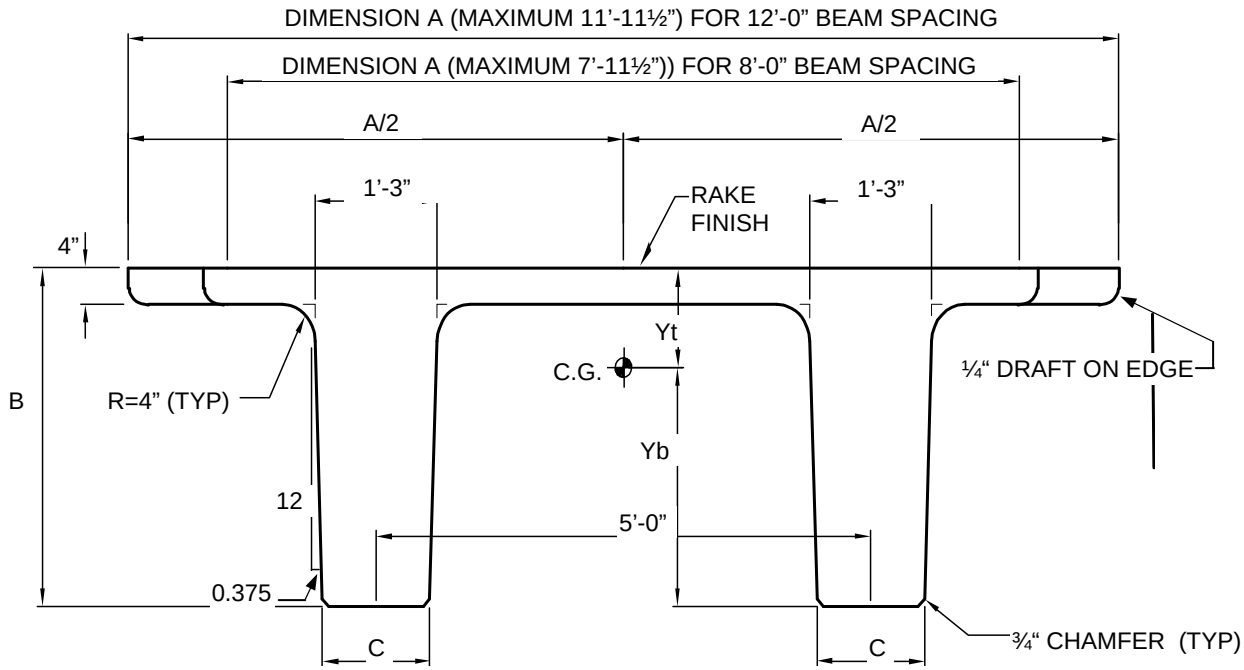

Beam Designation	Beam Width Inches	Beam Depth Inches	Base Stem Width Inches	Area IN^2	I IN^4	Yb Inches	Yt Inches	St IN^3	Sb IN^3	Weight PLF
	A	B	C			D	E			
Minimum Width Beams										
Next 36 F	95.50	36.00	13.00	1287	160240	21.77	14.23	11261	7361	1341
Next 32 F	95.50	32.00	13.25	1182	115813	19.51	12.49	9272	5936	1231
Next 28 F	95.50	28.00	13.50	1075	79901	17.24	10.76	7426	4635	1120
Next 24 F	95.50	24.00	13.75	966	51823	14.95	9.05	5726	3466	1006
Maximum Width Beams										
Next 36 F	143.50	36.00	13.00	1479	185525	23.36	12.64	14678	7942	1541
Next 32 F	143.50	32.00	13.25	1374	134258	20.98	11.02	12183	6399	1431
Next 28 F	143.50	28.00	13.50	1267	92661	18.57	9.43	9826	4990	1320
Next 24 F	143.50	24.00	13.75	1158	60045	16.12	7.88	7620	3725	1206